RE-P 92003/2023-10-30
Replaces: 2021-08-11

Axial piston variable pump A4VG series 32

Asia Pacific

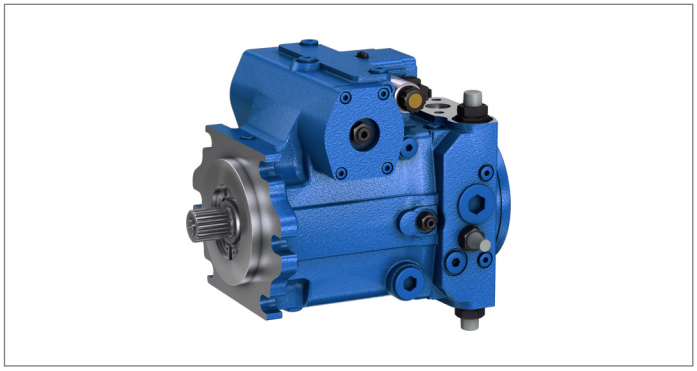

- High-pressure pump for applications in closed circuits
- Size 28 to 180
- Nominal pressure 400 bar
- Maximum pressure 450 bar

Features

- Integrated auxiliary pump for boost and pilot oil supply
- Flow direction changes when the swashplate is moved through the neutral position
- High-pressure relief valves with integrated boost function
- With adjustable pressure cut-off as standard
- Boost-pressure relief valve
- Through drive for mounting of further pumps up to same size
- Large variety of controls
- Swashplate design

Contents

Type code 2
Type code 2
Hydraulic fluids 6
Working pressure range 8
Technical data 10
HD – Proportional control, hydr., pilot-pressure related 13
HW – Proportional control, hydr., mechanical servo 15
DA – Automatic control, speed related 17
DG – Hydraulic control, direct operated 20
EP – Proportional control, electric 21
EZ – Two-point control, electric 23
ET – Electric control, direct operated 24
Dimensions, size 28 28
Dimensions, size 40 34
Dimensions, size 56 40
Dimensions, size 71 46
Dimensions, size 90 52
Dimensions, size 125 57
Dimensions, size 180 64
Dimensions, through drive 69
Overview of mounting options 82
Combination pumps A4VG + A4VG 83
High-pressure relief valves 84
Pressure cut-off 85
Mechanical stroke limiter 86
Stroking chamber pressure port X_3 and X_4 87
Measuring ports M_A, M_B, M_H 88
Filtration/External boost pressure supply 89
Connector for solenoids 94
Rotary inch valve 95
Installation dimensions for coupling assembly 96
Installation instructions 97
Project planning notes 100
Safety instructions 101

Type code

01	02	03	04	05	06	07	08	09		10	11		12	13	14	15	16	17	18	19	20	21	22
A4V	**G**								**/**	**32**		–	**N**										

Axial piston unit

01	Swashplate design, variable, nominal pressure 400 bar, maximum pressure 450 bar	**A4V**

Operating mode

02	Pump, closed circuit	**G**

Size (NG)

03	Geometric displacement, see "Technical data" on page 10	**28**	**40**	**56**	**71**	**90**	**125**	**180**

Control device

				28	40	56	71	90	125	180	
04	Proportional control hydraulic	pilot-pressure related, with inlet filtration in **P**[1]		●	●	●	●	●	●	●	**HD3**
		mechanical servo		●	●	●	●	●	●	●	**HW**
	Automatic control, speed related		U = 12 V	●	●	●	●	●	●	●	**DA1**
			U = 24 V	●	●	●	●	●	●	●	**DA2**
	Hydraulic control, direct operated			●	●	●	●	●	●	●	**DG**
	Proportional control electric	with proportional solenoid with inlet filtration in **P**[1]	U = 12 V	●	●	●	●	●	●	●	**EP3**
			U = 24 V	●	●	●	●	●	●	●	**EP4**
	Two-point control, electric	with switching solenoid	U = 12 V	●	●	●	●	●	●	●	**EZ1**
			U = 24 V	●	●	●	●	●	●	●	**EZ2**
	Electronic control	direct operated by two pressure reducing valves; prepared for BODAS software[2]	U = 12 V	●	●	–	–	–	●	–	**ETA**
			U = 24 V	●	●	–	–	–	●	–	**ETB**
		direct operated by two pressure reducing valves (FTDRE)	U = 12 V	●	●	–	–	–	–	–	**ET3**
			U = 24 V	●	●	–	–	–	–	–	**ET4**
		direct operated by two pressure reducing valves (DRE5)	U = 12 V	–	–	–	–	–	●	–	**ET7**
			U = 24 V	–	–	–	–	–	●	–	**ET8**

Pressure cut-off

		28	40	56	71	90	125	180	
05	Without pressure cut-off (without code)[3]	●	●	–	–	–	●	–	
	Pressure cut-off	●	●	●	●	●	●	●	**D**

Neutral position switch

		28	40	56	71	90	125	180	
06	Without neutral position switch (without code)	●	●	●	●	●	●	●	
	Neutral position switch (only for HW control)	●	●	●	●	●	●	●	**L**

Mechanical stroke limiter

		28	40	56	71	90	125	180	
07	Without mechanical stroke limiter (without code)	●	●	●	●	●	●	●	
	Mechanical stroke limiter, externally adjustable	●	●	●	●	●	●	●	**M**

Stroking chamber pressure port

		28	40	56	71	90	125	180	
08	Without stroking chamber pressure port X_3, X_4 (without code)	●	●	●	●	●	●	●	
	Stroking chamber pressure port X_3, X_4	●	●	●	●	●	●	●	**T**

● = Available ○ = On request – = Not available = Preferred program

1) Sizes 28 to 71 are designed with inlet filtration in **P** and X_1/X_2
2) The ETA/ETB control is only permissible in combination with port plate 22 or 30, see position 15 "Port thread: Metric with O-ring seal following ISO 6149".
3) Version not available for all port plate variants, please contact us.

01	02	03	04	05	06	07	08	09		10	11		12	13	14	15	16	17	18	19	20	21	22
A4V	**G**								**/**	**32**		–	**N**										

DA control valve

			HD	HW	DG	DA	EP	EZ	ET	
09	Without DA control valve		●	●	●	–	●	●	●	**1**
	DA control valve, fixed setting		●	●	●	●	●	–	–	**2**
	DA control valve, mechanically adjustable, with position lever	direction of actuation, clockwise	●	●	●	●	●	–	–	**3R**
		direction of actuation, counter-clockwise	●	●	●	●	●	–	–	**3L**
	DA control valve, fixed setting, ports for pilot control device		●	●	–	●	●	–	–	**7**
	DA control valve, fixed setting and hydraulic inch valve mounted, control with hydraulic fluid, mineral oil-based		–	–	–	●	–	–	–	**8**

Series

10	Series 3, index 2	**32**

Direction of rotation

			28	40	56	71	90	125	180	
11	Viewed on drive shaft	clockwise	●	●	●	●	●	●	●	**R**
		counter-clockwise	●	●	●	●	●	●	●	**L**

Sealing material

		28	40	56	71	90	125	180	
12	NBR (nitrile rubber), shaft seal made of FKM (fluorocarbon rubber)	●	●	●	●	●	●	●	**N**

Drive shaft

			28	40	56	71	90	125	180	
13	Splined shaft DIN 5480	for single pump	●	●	●	●	●	●	●	**Z**
		for combination pump – 1st pump	–[4]	●	●	●	●	●	–[4]	**A**
	Splined shaft ANSI B92.1a	for single pump	●	●	●	●	●	●	●	**S**
		for combination pump – 1st pump	–[5]	–[5]	●	●	–[5]	●	●	**T**
		only for combination pump – 2nd pump	–	●	–	–	●	–	–	**U**

Mounting flange

			28	40	56	71	90	125	180	
14	SAE J744	2-hole	●	●	●	–	–	–	–	**C**
		4-hole	–	–	–	–	–	–	●	**D**
		2+4-hole	–	–	–	●	●	●	–	**F**

Working port (port plate)

15	**Port thread: Metric with profile sealing ring seal based on DIN 3852** **Fastening thread at the SAE working port and through drive: Metric according to DIN 13**		28	40	56	71	90	125	180	
	SAE working port **A** and **B**, top and bottom	suction port **S** bottom	–	●	●	●	●	●	●	**02**
	SAE working port **A** and **B**, top and bottom	suction port **S** at top	–	●	●	○	○	○	○	**03**
	SAE working port **A** and **B**, same side right[6]	suction port **S** bottom	●	–	–	–	–	–	–	**10**
	SAE working port **A** and **B**, same side left[6]	suction port **S** bottom	–	–	–	●	○	●	–	
	SAE working port **A** and **B**, same side right[6]	suction port **S** at top	–	–	–	○	○	○	–	**13**
	SAE working port **A** and **B**, same side left[6]	suction port **S** at top	●	–	●	–	–	–	–	
	Port thread: Metric with O-ring seal based on ISO 6149 **Fastening thread at the SAE working port and through drive: Metric according to DIN 13**		28	40	56	71	90	125	180	
	SAE working port **A** and **B**, top and bottom	suction port **S** bottom	–	●	–	–	–	●	–	**22**
	SAE working port **A** and **B**, same side right[6]	suction port **S** bottom	●	–	–	–	–	–	–	**30**

● = Available ○ = On request – = Not available ▭ = Preferred program

4) Standard for combination pump – 1st pump: Shaft Z
5) Standard for combination pump – 1st pump: Shaft S
6) Only possible without attachment filter

01	02	03	04	05	06	07	08	09		10	11		12	13	14	15	16	17	18	19	20	21	22
A4V	**G**								**/**	**32**		–	**N**										

Boost pump			**28**	**40**	**56**	**71**	**90**	**125**	**180**	
16	Without integrated boost pump	without through drive	●	●	●	●	●	●	●	**N**
		with through drive	●	●	●	●	●	●	●	**K**
	Integrated boost pump	with and without through drive	●	●	●	●	●	●	●	**F**

Through drive[7]				**28**	**40**	**56**	**71**	**90**	**125**	**180**	
17	Without through drive, only for version N and F (position 16)			●	●	●	●	●	●	●	**00**
	Flange SAE J744	Hub for splined shaft									
	82-2 (A)	5/8 in	9T 16/32DP[8]	●	●	●	●	●	●	●	**01**
		3/4 in	11T 16/32DP[8]	–	●	●	●	–	–	●	**52**
	101-2 (B)	7/8 in	13T 16/32DP[8]	●	●	●	●	●	●	●	**02**
		1 in	15T 16/32DP[8]	●	●	●	●	●	●	●	**04**
	127-2 (C)	1 in	15T 16/32DP[8]	–	●	–	–	–	–	–	**09**
	127-2 (C)	1 1/4 in	14T 12/24DP[8]	–	–	●	●	–	–	●	**07**
	127-2/4 (C)			–	–	–	–	●	●	–	
	152-2/4 (D)	W35	2×30×16×9g[9]	–	–	–	–	●	–	–	**73**
		1 3/4 in	13T 8/16DP[8]	–	–	–	–	–	●	●	**69**
	165-4 (E)	1 3/4 in	13T 8/16DP[8]	–	–	–	–	–	–	●	**72**

High-pressure relief valve		Setting range Δp_{HD}		**28**	**40**	**56**	**71**	**90**	**125**	**180**	
18	High-pressure relief valve, pilot operated	100 ... 420 bar	with bypass	–	–	–	●	●	●	●	**1**
	High-pressure relief valve direct operated, fixed setting	250 ... 420 bar	without bypass	●	●	●	–	–	–	–	**3**
			with bypass	●	●	●	–	–	–	–	**5**
		100 ... 250 bar	without bypass	●	●	●	–	–	–	–	**4**
			with bypass	●	●	●	–	–	–	–	**6**

Filtration boost circuit/external boost pressure supply		**28**	**40**	**56**	**71**	**90**	**125**	**180**	
19	Filtration in the boost pump suction line	●	●	●	●	●	●	●	**S**
	Filtration in the boost pump pressure line Ports for external boost circuit filtration (**F**$_e$ and **F**$_a$)	●	●	●	●	●	●	●	**D**
	Attachment filter with cold start valve	–	●	●	●	●	●	●	**F**
	Attachment filter with cold start valve and visual contamination indicator	–	●	●	●	●	●	●	**P**
	Attachment filter with cold start valve and electric contamination indicator, function normally open	–	●	●	●	●	●	●	**B**
	External boost pressure supply (version without integrated boost pump – N00, K...)	●	●	●	●	●	●	●	**E**

Swivel angle sensor		**28**	**40**	**56**	**71**	**90**	**125**	**180**	
20	Without swivel angle sensor (without code)	●	●	●	●	●	●	●	
	Electric swivel angle sensor mounted[10]	○	○	○	○	○	○	○	**R**

● = Available ○ = On request – = Not available ▭ = Preferred program

7) Specifications for version with integrated boost pump, please contact us for version without boost pump
8) Hub for splined shaft according to ANSI B92.1a (Splined shaft in accordance with SAE J744)
9) Hub for splined shaft according to DIN 5480
10) The swivel angle sensor is used to detect the swivel angle and thus the displacement. For available options regarding the swivel angle detection, please contact us.

01	02	03	04	05	06	07	08	09		10	11		12	13	14	15	16	17	18	19	20	21	22
A4V	**G**								**/**	**32**		–	**N**										

Connector for solenoids[11)]

			28	40	56	71	90	125	180	
21	Without connector (without code), only with purely hydraulic controls		●	●	●	●	●	●	●	
	DEUTSCH connector molded, 2-pin	without suppressor diode	●	●	●	●	●	●	●	**P**
		with suppressor diode (only for EZ and DA)	●	●	●	●	●	●	●	**Q**

Standard/special version

22	Standard version (without code)	
	Special version	**-S**

● = Available ○ = On request – = Not available = Preferred program

Notice

- ▶ Note the project planning notes on page 100!
- ▶ In addition to the type code, please specify the relevant technical data when placing your order.
- ▶ Please note that not all type code combinations are available although the individual functions are marked as being available.

11) Connector specifications refers to control device, connectors for other electric components may deviate

Hydraulic fluids

The axial piston unit is designed for operation with HLP mineral oil according to DIN 51524.
Application instructions and requirements for hydraulic fluid selection, behavior during operation as well as disposal and environmental protection should be taken from the following data sheets before the start of project planning:

- 90220: Hydraulic fluids based on mineral oils and related hydrocarbons
- 90221: Environmentally acceptable hydraulic fluids
- 90222: Fire-resistant, water-free hydraulic fluids (HFDR/HFDU)
- 90225: Limited technical data for operation with water-free and water-containing fire-resistant hydraulic fluids (HFDR, HFDU, HFAE, HFAS, HFB, HFC).

Selection of hydraulic fluid
Bosch Rexroth evaluates hydraulic fluids on the basis of the Fluid Rating according to the technical data sheet 90235.
Hydraulic fluids with positive evaluation in the Fluid Rating are provided in the following technical data sheet:

- 90245: Bosch Rexroth Fluid Rating List for Rexroth hydraulic components (pumps and motors)

Selection of hydraulic fluid shall make sure that the operating viscosity in the operating temperature range is within the optimum range (ν_{opt}; see selection diagram).

Viscosity and temperature of hydraulic fluids

	Viscosity	Shaft seal	Temperature[3]	Remarks
Cold start	ν_{max} ≤ 1600 mm²/s	NBR[2]	ϑ_{St} ≥ −40 °C	t ≤ 3 min, without load (p ≤ 50 bar), n ≤ 1000 rpm Permissible temperature difference between axial piston unit and hydraulic fluid in the system maximum 25 K
		FKM	ϑ_{St} ≥ −25 °C	
Warm-up phase	ν = 1600 ... 400 mm²/s			t ≤ 15min, p ≤ 0.7 × p_{nom} and n ≤ 0.5 × n_{nom}
Permissible operating range	ν = 400 ... 10 mm²/s[1]	NBR[2]	ϑ ≤ +85 °C	Measured at port **T**
		FKM	ϑ ≤ +110 °C	
	ν_{opt} = 36 ... 16 mm²/s			Optimal operating viscosity and efficiency range
Short-term operation	ν_{min} = 10 ... 7 mm²/s	NBR[2]	ϑ ≤ +85 °C	t ≤ 3 min, p ≤ 0.3 × p_{nom} , measured at port **T**
		FKM	ϑ ≤ +110 °C	

Notice
The maximum circuit temperature of +115 °C must not be exceeded at the working ports **A** and **B** complying with the permissible viscosity.

1) This corresponds, for example on the VG 46, to a temperature range of +4 °C to +85 °C (see selection diagram)
2) Special version, please contact us
3) If the temperature at extreme operating parameters cannot be adhered to, please contact us.

▼ **Selection diagram**

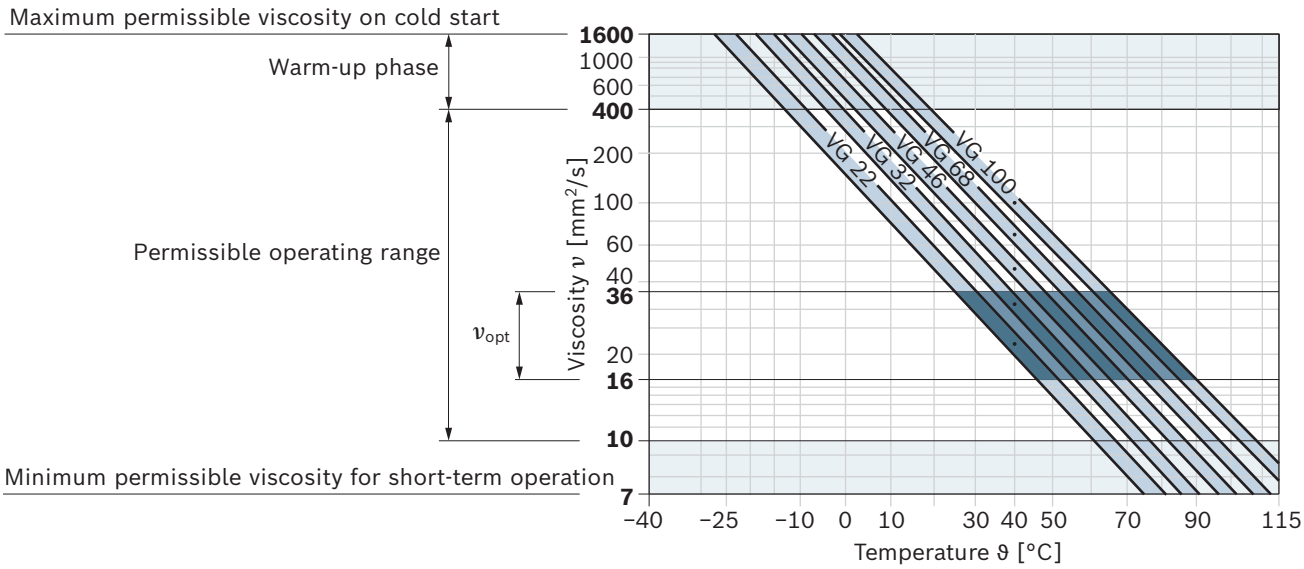

Filtration of the hydraulic fluid

Finer filtration improves the cleanliness level of the hydraulic fluid, which increases the service life of the axial piston unit.

A cleanliness level of at least 20/18/15 is to be maintained according to ISO 4406.

At a hydraulic fluid viscosity of less than 10 mm²/s (e.g. due to high temperatures during short-term operation), a cleanliness level of at least 19/17/14 according to ISO 4406 is required.

For example, a viscosity of 10 mm²/s corresponds to the following temperatures with the following media:

- HLP 32 a temperature of 73 °C
- HLP 46 a temperature of 85 °C

Working pressure range

Pressure at working port A or B		**Definition**
Nominal pressure p_{nom}	400 bar	The nominal pressure corresponds to the maximum design pressure.
Maximum pressure p_{max}	450 bar	The maximum pressure corresponds to the maximum working pressure within a single operating period. The sum of single operating periods must not exceed the total operating period.
Maximum single operating period	10 s	
Total operating period	300 h	
Minimum pressure (low-pressure side)	10 bar above case pressure	Minimum pressure on the low-pressure side (**A** or **B**) required to prevent damage to the axial piston unit. Boost pressure setting must be higher depending on system.
Rate of pressure change $R_{A\ max}$	9000 bar/s	Maximum permissible speed of pressure build-up and reduction during a pressure change across the entire pressure range.
Boost pump		
Nominal pressure $p_{Sp\ nom}$	25 bar	
Maximum pressure $p_{Sp\ max}$	40 bar	
Pressure at suction port **S** (inlet)		
Continuous $p_{S\ min}$	≥0.8 bar absolute	$\nu \leq 30\ mm^2/s$
Short-term, at a cold start	≥0.5 bar absolute	$t < 3$ min
Maximum pressure $p_{S\ max}$	≤5 bar absolute	
Control pressure		
Minimum control pressure $p_{St\ min}$ at n = 2000 rpm		Required control pressure p_{St}, to ensure the function of the control. The required control pressure is dependent on rotational speed, working pressure and the spring assembly of the stroking piston.
Controls EP, HD, HW	20 bar above case pressure	
Controls DA, DG, EZ, ET	25 bar above case pressure	
Case pressure at port T		
Continuous differential pressure $\Delta p_{T\ cont}$	2 bar	Maximum, averaged differential pressure at the shaft seal (case to ambient pressure)
Maximum differential pressure $\Delta p_{T\ max}$	see diagram on page 9	Permissible differential pressure at the shaft seal (case to ambient pressure)
Pressure peaks $p_{T\ peak}$	10 bar	$t < 0.1$ s, maximum 1000 pressure peaks permissible

▼ **Maximum pressure p_{max} up to 450 bar and total operating period**

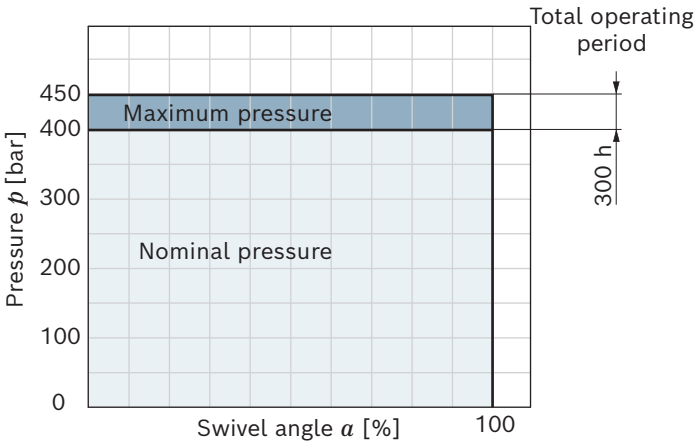

▼ **Rate of pressure change $R_{A\ max}$**

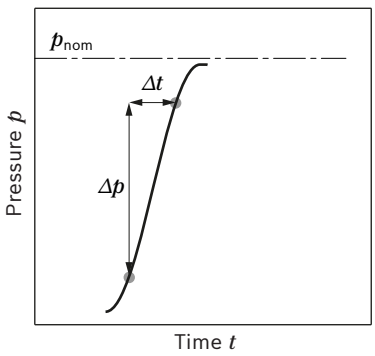

Total operating period = $t_1 + t_2 + ... + t_n$

▼ **Maximum differential pressure at the shaft seal**

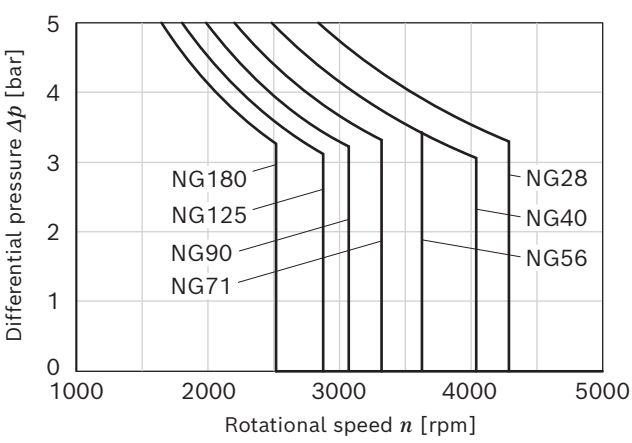

▼ **Pressure definition**

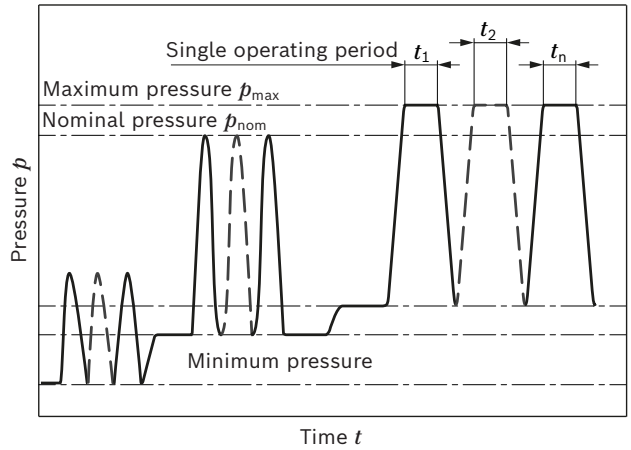

Notice

- Working pressure range applies when using hydraulic fluids based on mineral oils. Please contact us for values for other hydraulic fluids.
- In addition to the hydraulic fluid and the temperature, the service life of the shaft seal is influenced by the rotational speed of the axial piston unit and the case pressure.
- The service life of the shaft seal decreases with increasing frequency of pressure peaks and increasing mean differential pressure.
- The case pressure must be greater than the external pressure (ambient pressure) at the shaft seal.

Technical data

Size			NG		28	40	56	71	90	125	180
Geometric displacement, per revolution											
	variable pump		$V_{g\,max}$	cm^3	28	40	56	71	90	125	180
	boost pump (at p = 20 bar)		$V_{g\,Sp}$	cm^3	6.1	8.6	11.6	19.6	19.6	28.3	39.8
Rotational speed[1]	maximum at $V_{g\,max}$		n_{nom}	rpm	4250	4000	3600	3300	3050	2850	2500
	limited maximum[2]		n_{max1}	rpm	4500	4200	3900	3600	3300	3250	2900
	intermittent maximum[3]		n_{max2}	rpm	5000	5000	4500	4100	3800	3450	3000
	minimum		n_{min}	rpm	500	500	500	500	500	500	500
Flow	at n_{nom} and $V_{g\,max}$ and Δp = 0 bar		q_v	l/min	119	160	202	234	275	356	450
Power[4]	at n_{nom}, $V_{g\,max}$ and Δp = 400 bar		P	kW	79	107	134	156	183	238	300
Torque[4]	with $V_{g\,max}$ and	Δp = 400 bar	M	Nm	178	255	357	452	573	796	1146
		Δp = 100 bar	M	Nm	45	64	89	113	143	199	286
Rotary stiffness of drive shaft		S	c	kNm/rad	31.4	69	80.8	98.8	158.1	218.3	244.5
		T	c	kNm/rad	–	–	95	120.9	–	252.1	318.4
		A	c	kNm/rad	–	79.6	95.8	142.4	176.8	256.5	–
		Z	c	kNm/rad	32.8	67.5	78.8	122.8	137	223.7	319.6
		U	c	kNm/rad	–	50.8	–	–	107.6	–	–
Moment of inertia of the rotary group			J_{TW}	kgm^2	0.0022	0.0038	0.0066	0.0097	0.0149	0.0232	0.0444
Maximum angular acceleration[5]			α	rad/s^2	38000	30000	24000	21000	18000	14000	11000
Case volume			V	l	0.9	1.1	1.5	1.3	1.5	2.1	3.1
Weight (without through drive) approx.[6]			m	kg	29	31	38	50	60	80	101

Notice

- Theoretical values, without efficiency and tolerances; values rounded
- Operation above the maximum values or below the minimum values may result in a loss of function, a reduced service life or in the destruction of the axial piston unit. Bosch Rexroth recommends testing the loads by means of experiment or calculation / simulation and comparison with the permissible values.

Determination of the operating characteristics		
Flow	$q_v = \frac{V_g \times n \times \eta_v}{1000}$	[l/min]
Torque	$M = \frac{V_g \times \Delta p}{20 \times \pi \times \eta_{hm}}$	[Nm]
Power	$P = \frac{2\,\pi \times M \times n}{60000} = \frac{q_v \times \Delta p}{600 \times \eta_t}$	[kW]

Key

V_g Displacement per revolution [cm^3]
Δp Differential pressure [bar]
n Rotational speed [rpm]
η_v Volumetric efficiency
η_{hm} Hydraulic-mechanical efficiency
η_t Total efficiency ($\eta_t = \eta_v \times \eta_{hm}$)

1) The values are applicable:
   – for the optimum viscosity range from ν_{opt} = 36 to 16 mm^2/s
   – for hydraulic fluid based on mineral oils (for HF hydraulic fluids, observe the technical data in 90225)
2) Valid at half corner power (e.g. at $V_{g\,max}$ and $p_{nom}/2$)
3) Valid at Δp = 70 to 150 bar or Δp < 300 bar and t < 0.1 s
4) Without boost pump
5) The data are valid for values between the minimum required and maximum permissible rotational speed.
   Valid for external excitation (e.g. diesel engine 2 to 8 times rotary frequency; cardan shaft twice the rotary frequency).
   The limit value is only valid for a single pump.
   The load capacity of the connection parts must be considered.
6) Weight may vary by equipment.

Permissible radial and axial loading of the drive shaft

▼ Splined shaft DIN 5480

Size		NG		28	40	40	56	56	71	71
Drive shaft				W25	W30	W35	W30	W35	W35	W40
Maximum radial force at distance a (to the shaft collar)	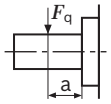	$F_{q\ max}$	N	3030	3608	3092	5051	4329	5489	4803
		a	mm	17.5	17.5	20	17.5	20	20	22.5
Maximum axial force	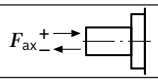	$+ F_{ax\ max}$	N	1557	2120	2120	2910	2910	4242	4242
		$- F_{ax\ max}$	N	417	880	880	1490	1490	2758	2758

Size		NG		90	90	125	125	180
Drive shaft				W35	W45	W40	W45	W50
Maximum radial force at distance a (to the shaft collar)	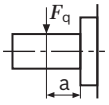	$F_{q\ max}$	N	6957	5411	8455	7516	9740
		a	mm	20	25	22.5	25	27.5
Maximum axial force	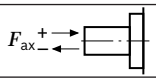	$+ F_{ax\ max}$	N	4330	4330	6053	6053	7500
		$- F_{ax\ max}$	N	2670	2670	3547	3547	4500

▼ Splined shaft ANSI B92.1a

Size		NG		28	40	40	56	56	71	71
Drive shaft			in	1	1	1 1/4	1 1/4	1 3/8	1 1/4	1 3/8
Maximum radial force at distance a (to the shaft collar)	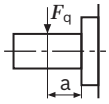	$F_{q\ max}$	N	2983	4261	3409	4772	4338	6050	5500
		a	mm	19	19	24	24	24	24	24
Maximum axial force	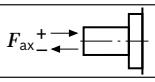	$+ F_{ax\ max}$	N	1557	2120	2120	2910	2910	4242	4242
		$- F_{ax\ max}$	N	417	880	880	1490	1490	2758	2758

Size		NG		90	90	125	125	180	180
Drive shaft			in	1 1/4	1 3/4	1 3/4	2	1 3/4	2 1/4
Maximum radial force at distance a (to the shaft collar)	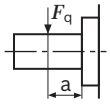	$F_{q\ max}$	N	7670	5478	7609	6658	10956	8522
		a	mm	24	33.5	33.5	40	33.5	40
Maximum axial force	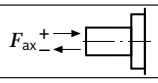	$+ F_{ax\ max}$	N	4330	4330	6053	6053	7500	7500
		$- F_{ax\ max}$	N	2670	2670	3547	3547	4500	4500

Notice

- ▶ The axial and radial loading generally influence the bearing service life.
- ▶ Special requirements apply in the case of belt drive and cardan shaft. Please contact us.

Permissible input and through-drive torques

Size		NG		28	40	56	71	90	125	180
Torque at $V_{g\,max}$ and Δp = 400 bar[1]		M	Nm	178	255	357	452	573	796	1146
Max. input torque on drive shaft[2]										
DIN 5480	Z	$M_{E\,max}$	Nm	352	522	522	912	912	1460	3140
				W25	W30	W30	W35	W35	W40	W50
	A	$M_{E\,max}$	Nm	–	912	912	1460	2190	2190	–
					W35	W35	W40	W45	W45	
ANSI B92.1a (SAE J744)	S	$M_{E\,max}$	Nm	314	602	602	602	1640	1640	1640
			in	1	1 1/4	1 1/4	1 1/4	1 3/4	1 3/4	1 3/4
	T	$M_{E\,max}$	Nm	–	–	970	970	–	2670	4070
			in	–	–	1 3/8	1 3/8	–	2	2 1/4
	U[3]	$M_{E\,max}$	Nm	–	314	–	–	602	–	–
			in	–	1	–	–	1 1/4	–	
Maximum through-drive torque[4]		$M_{D\,max}$	Nm	231	314	521	660	822	1110	1760

▼ Distribution of torques

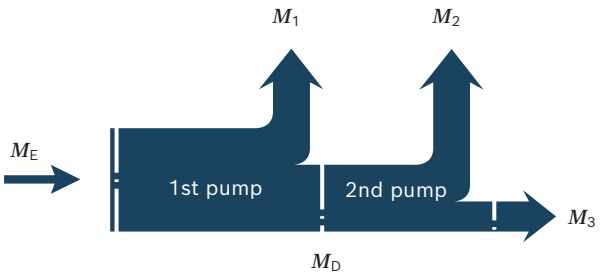

Torque at 1st pump	M_1		
Torque at 2nd pump	M_2		
Torque at 3rd Pump	M_3		
Input torque	M_E	=	$M_1 + M_2 + M_3$
	M_E	<	$M_{E\,max}$
Through-drive torque	M_D	=	$M_2 + M_3$
	M_D	<	$M_{D\,max}$

1) Efficiency not considered
2) For drive shafts free of radial force
3) Shaft "U" is only permissible as a drive shaft for the 2nd pump in a combination pump of the same size.
4) Note maximum input torque for shaft S!

HD – Proportional control, hydraulic, pilot-pressure related

The output flow of the pump is infinitely variable between 0 and 100%, proportional to the difference in pilot pressure applied to the two pilot signal ports (**Y**$_1$ and **Y**$_2$). The flow is reversible, depending on pilot pressure side **Y**$_1$ and **Y**$_2$. The pilot pressure or the pilot pressure difference acts as a setpoint force on the control spool. It then directs control oil into and out of the stroking cylinder to adjust pump displacement according to the setpoint value. The mechanical feedback lever connected to the stroking piston closes the control circuit via a force comparison with the hydraulic setpoint force. In this case, the pump swivel angle is adjusted proportionally to the current difference in pilot pressure.
If the pump is also equipped with a DA control valve (see page 17), automotive operation is possible for travel drives.

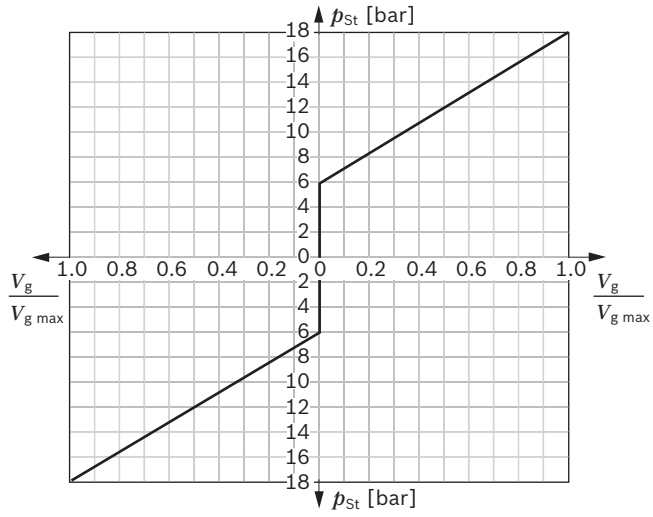

Size			28 ... 180
Start of control ($V_{g\,0}$)	p_{St}	bar	6
End of control ($V_{g\,max}$)	p_{St}	bar	18
Maximum required pilot oil volume	$q_{v\,St}$	bar	0.5

Key

V_g	Displacement
$V_{g\,0}$	Displacement in neutral position
$V_{g\,max}$	Maximum displacement
p_{St}	Pilot pressure signal at port **Y**$_1$, **Y**$_2$
$q_{v\,St}$	Maximum required pilot oil volume at port **Y**$_1$, **Y**$_2$

Notice
For exact neutral position, the pilot pressures **Y**$_1$ and **Y**$_2$ must be completely unloaded via the external control valve or the control pressure difference **Y**$_1$-**Y**$_2$ must be compensated.

▼ **Circuit diagram, standard version**[1)]

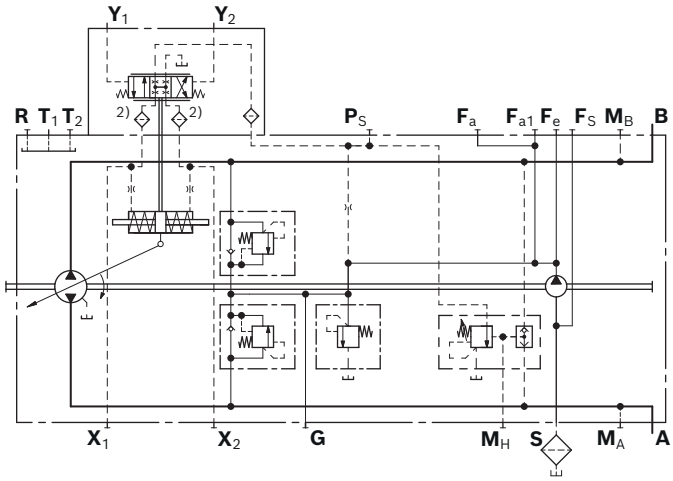

▼ **Circuit diagram, version with DA control valve**[1)]

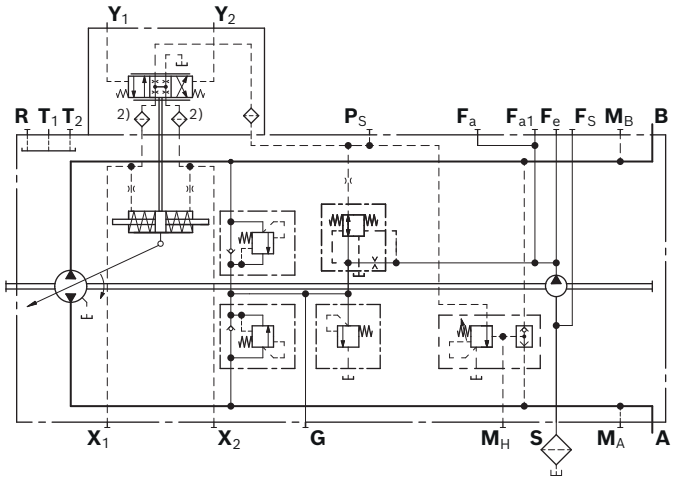

1) Size 28 without port **F**$_{a1}$ and **F**$_S$
2) Only sizes 28 to 71 are designed with inlet filtration in **X**$_1$/**X**$_2$

Correlation of direction of rotation, control and flow direction									
Direction of rotation		Clockwise				Counter-clockwise			
Size		28 ... 56		71 ... 180		28 ... 56		71 ... 180	
Pilot signal		Y_1	Y_2	Y_1	Y_2	Y_1	Y_2	Y_1	Y_2
Control pressure		X_1	X_2	X_1	X_2	X_1	X_2	X_1	X_2
Port plate 02 and 10	Flow direction	**A** to **B**	**B** to **A**	**B** to **A**	**A** to **B**	**B** to **A**	**A** to **B**	**A** to **B**	**B** to **A**
	Working pressure	M_B	M_A	M_A	M_B	M_A	M_B	M_B	M_A
Port plate 03 and 13	Flow direction	**B** to **A**	**A** to **B**	**A** to **B**	**B** to **A**	**A** to **B**	**B** to **A**	**B** to **A**	**A** to **B**
	Working pressure	M_A	M_B	M_B	M_A	M_B	M_A	M_A	M_B

▼ **Position of ports (example)**

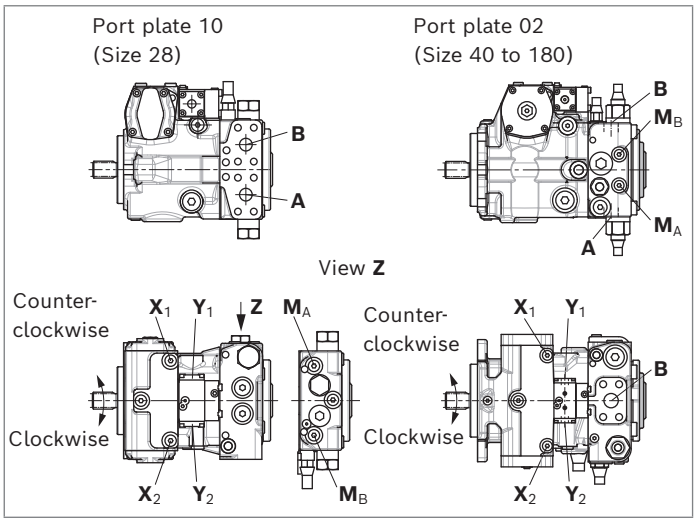

HW – Proportional control, hydraulic, mechanical servo

The output flow of the pump is infinitely variable between 0 and 100%, proportional to the swivel angle of the control lever.
A feedback lever connected to the stroking piston maintains the pump flow for any given position of the control lever.
If the pump is also equipped with a DA control valve (see page 17), automotive operation is possible for travel drives.

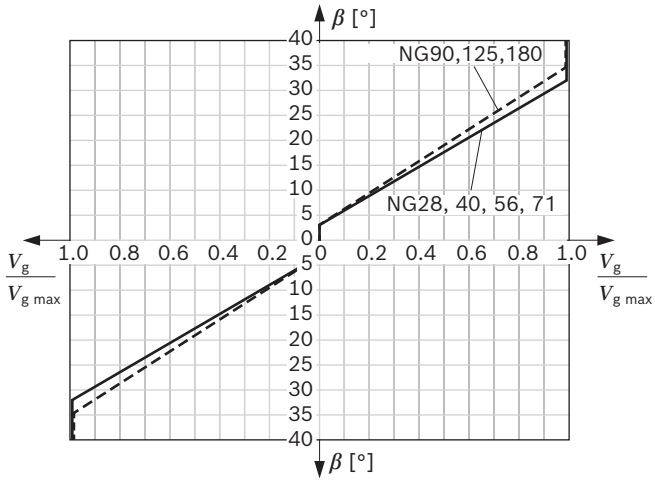

Size		28 ... 71	90 ... 180
Start of control ($V_{g\,0}$)	β	±3°	±3°
End of control ($V_{g\,max}$)	β	±32°	±34.5°
Rotational limiter control lever (internal)	β	±38°	±38°

The maximum required torque at the control lever is 1.7 Nm. To prevent damage to the HW control module, a positive mechanical stop of 36.5°±1 must be provided for the HW control lever on the customer side.

Key

V_g	Displacement
$V_{g\,0}$	Displacement in neutral position
$V_{g\,max}$	Maximum displacement
β	Swivel angle at the control lever

Notice

- Spring-centering enables the pump, depending on pressure and rotational speed, to move automatically to the neutral position (V_g = 0) as soon as there is no longer any torque on the control lever of the HW control module.
- As standard delivery, the control lever is oriented toward the through drive (see dimensions).
- If necessary, the position of the lever can be changed. The procedure is defined in the instruction manual.
- On delivery, the position of the control lever can deviate from the installation drawing.

Option: Neutral position switch

The switch contact in the neutral position switch is closed when the control lever on the HW control module is in its neutral position. The switch opens when the control lever is moved out of the central position in either direction. Thus, the neutral position switch provides a monitoring function for drive units that require the control lever at the HW control module to be in the neutral position during certain operating conditions (e.g. starting diesel engine).

Technical data	
Load capacity	20 A (continuous), without switching operations
Switching capacity	15 A / 32 V (resistive load)
	4 A / 32 V (inductive load)
Connector version	DEUTSCH DT04-2P-EP04 (mating connector, see page 94)

▼ **Circuit diagram, standard version**[1)]

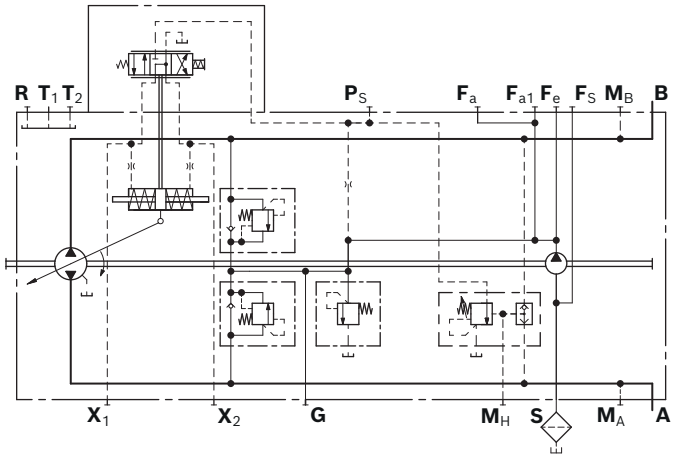

1) Size 28 without port F_{a1} and F_S

▼ Circuit diagram, version with DA control valve and neutral position switch[1)]

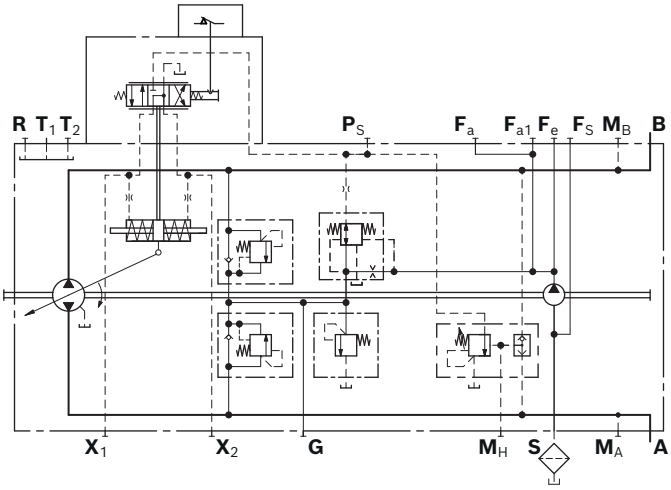

Correlation of direction of rotation, control and flow direction									
Direction of rotation		Clockwise				Counter-clockwise			
Size		28 ... 56		71 ... 180		28 ... 56		71 ... 180	
Lever direction[2)]		**ccw**	**cw**	**ccw**	**cw**	**ccw**	**cw**	**ccw**	**cw**
Control pressure		X_2	X_1	X_2	X_1	X_2	X_1	X_2	X_1
Port plate 02 and 10	Flow direction	**B** to **A**	**A** to **B**	**A** to **B**	**B** to **A**	**A** to **B**	**B** to **A**	**B** to **A**	**A** to **B**
	Working pressure	M_A	M_B	M_B	M_A	M_B	M_A	M_A	M_B
Port plate 03 and 13	Flow direction	**A** to **B**	**B** to **A**	**B** to **A**	**A** to **B**	**B** to **A**	**A** to **B**	**A** to **B**	**B** to **A**
	Working pressure	M_B	M_A	M_A	M_B	M_A	M_B	M_B	M_A

▼ Position of ports (example)

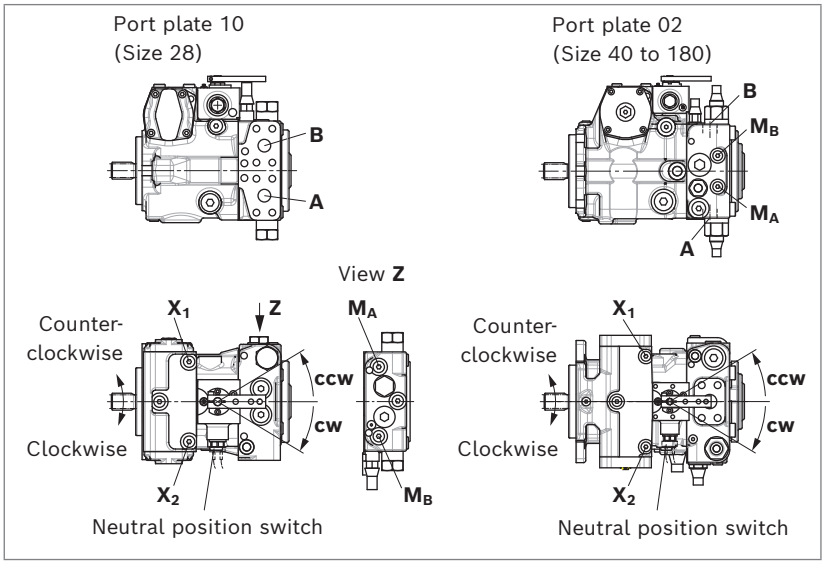

1) Size 28 without port F_{a1} and F_S
2) ccw = counter-clockwise,
cw = clockwise

DA – Automatic control, speed related

The DA closed loop control is an engine speed-dependent system for travel drives. The built-in DA control valve generates a pilot pressure that is proportional to pump drive speed (of the motor). This pilot pressure is directed to the stroking cylinder of the pump by an electromagnetically actuated 4/3-way directional valve. The pump displacement is infinitely variable in each flow direction and is influenced by both pump drive speed and system pressure. The flow direction (i.e. machine moving forward or backward) is determined by either solenoid **a** or **b** being activated.
Increasing the pump drive speed generates a higher pilot pressure from the DA control valve, with a subsequent increase in pump flow.
Depending on the selected operating characteristics of the pump, increasing the system pressure (i.e. machine load) causes the pump to swivel back towards a smaller displacement. An overload protection for the engine (against stalling) is achieved by combining this pressure-dependent reduction in pump stroke with a reduction in pilot pressure as the engine speed drops. Any additional power requirement, e.g. for hydraulic functions from attachments, could cause the engine rotational speed to drop further. This will cause a further reduction in pilot pressure and thus of the pump displacement. Automatic power distribution and full exploitation of the available power are achieved in this way, both for the travel drive and for the implement hydraulics, with priority given to the implement hydraulics. Various override options are available for DA control function to allow controlled operation of the implement hydraulics with high rotational speeds at reduced travel speed.
The DA control valve can also be used in pumps with EP, DG, HW and HD control modules to protect the combustion engine against overload.

Notice
DA closed loop control is only suitable for certain types of travel drive systems and requires review of the motor and vehicle parameters to ensure that the pump is used correctly and that machine operation is safe and efficient. We recommend that all DA applications be reviewed by a Bosch Rexroth application engineer.

Technical data, switching solenoid	DA1	DA2
Voltage	12 V (±20%)	24 V (±20%)
Neutral position $V_g = 0$	de-energized	de-energized
Position $V_{g\ max}$	current switched on	current switched on
Nominal resistance (at 20 °C)	5.5 Ω	21.7 Ω
Nominal power	26.2 W	26.5 W
Minimum required active current	1.32 A	0.67 A
Duty cycle	100%	100%
Type of protection: see connector version page 94		

▼ **Position of ports (example)**

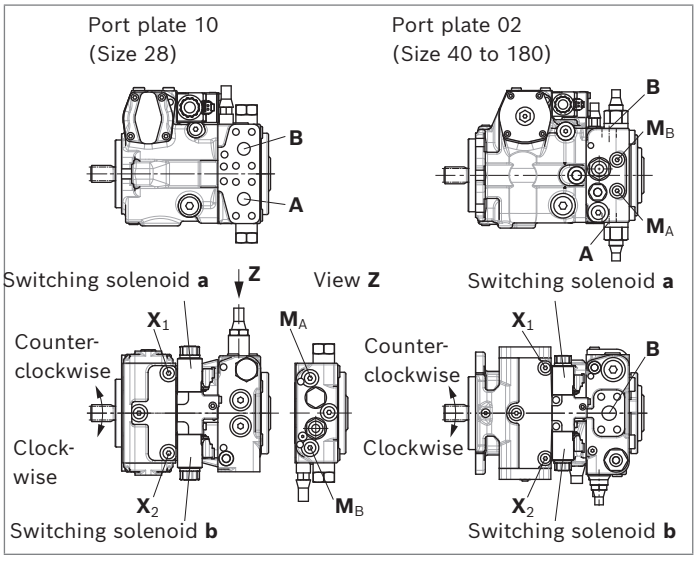

Correlation of direction of rotation, control and flow direction									
Direction of rotation		Clockwise				Counter-clockwise			
Size		28 … 56		71 … 180		28 … 56		71 … 180	
Actuation of switching solenoid		**a**	**b**	**a**	**b**	**a**	**b**	**a**	**b**
Control pressure		X_2	X_1	X_2	X_1	X_2	X_1	X_2	X_1
Port plate 02 and 10	Flow direction	**B** to **A**	**A** to **B**	**A** to **B**	**B** to **A**	**A** to **B**	**B** to **A**	**B** to **A**	**A** to **B**
	Working pressure	M_A	M_B	M_B	M_A	M_B	M_A	M_A	M_B
Port plate 03 and 13	Flow direction	**A** to **B**	**B** to **A**	**B** to **A**	**A** to **B**	**B** to **A**	**A** to **B**	**A** to **B**	**B** to **A**
	Working pressure	M_B	M_A	M_A	M_B	M_A	M_B	M_B	M_A

DA..2 – DA control valve, fixed setting

Pilot pressure is generated in relation to drive speed.

▼ **Circuit diagram DA control valve, fixed setting, DA**1D**2**/**DA**2D**2**[1)]

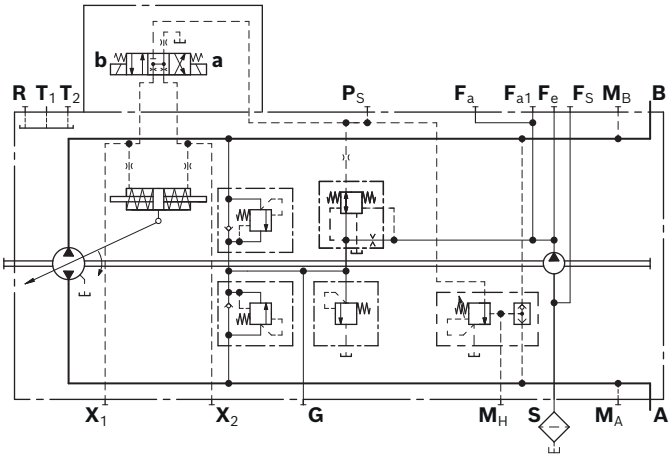

DA..3 – DA control valve, mechanically adjustable with position lever

Pilot pressure is generated in relation to drive speed.
Any reduction of pilot pressure possible, independently of drive speed, through mechanical actuation of the position lever (inch function).
The maximum permissible actuation torque at the position lever is M_{max} = 4 Nm.
In the standard version, the position lever is oriented towards the control module, see dimension.
The maximum angle of rotation is 70°.

DA..3R

Direction of actuation of the position lever: clockwise

DA..3L

Direction of actuation of the position lever: counter-clockwise

▼ **Circuit diagram DA**1D**3/DA**2D**3**[1)]

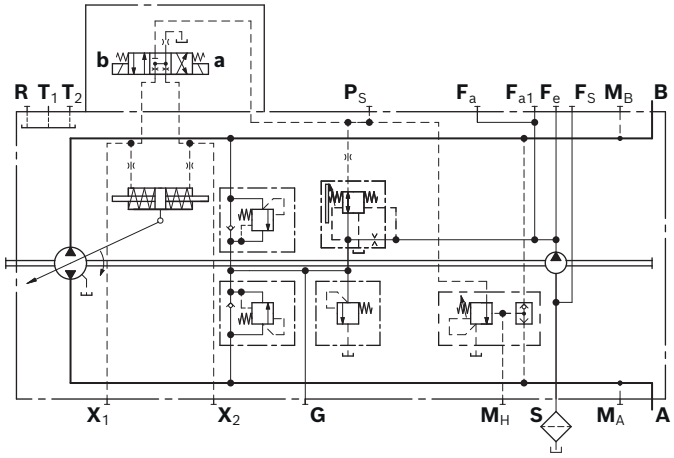

1) Size 28 without port F_{a1} and F_S

DA..7 – DA control valve, fixed setting, ports for pilot control device as inch valve

Any reduction of the pilot pressure possible, independent of the drive speed is achieved by the mechanical actuation of the pilot control device.

The pilot control device is installed separately from the pump (for example in the driver's cabin) and connected to the pump by two hydraulic control lines via ports $\mathbf{P}_S$ and **Y**.

A suitable pilot control device must be ordered separately and is not included in the scope of delivery.

Notice: Rotary inch valves, see page 95.

▼ **Circuit diagram DA**1D**7/DA**2D**7**[1)]

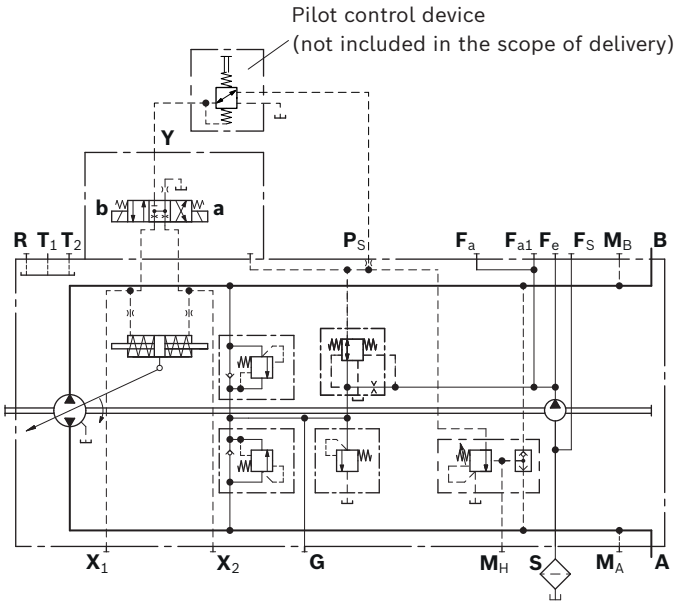

DA..8 – DA control valve, fixed setting and hydraulic inch valve mounted

Only for pumps with DA control module

- ▶ Version with throttle valve size 28, 40, 56, 71
- ▶ Version with pressure reducing valve size 90, 125, 180

Permits reduction of the pilot pressure, independently of the drive speed, hydraulically controlled (port **Z**).

The hydraulic inch valve at port **Z** is controlled with mineral oil-based hydraulic fluid.

Maximum permissible pilot pressure at port **Z**: 80 bar

▼ **Circuit diagram DA**1D**8/DA**2D**8 with throttle valve**[1)]

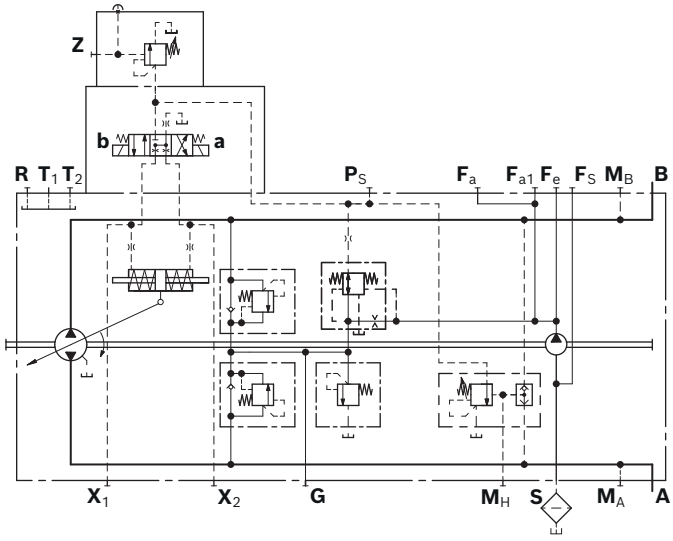

▼ **Circuit diagram DA**1D**8/DA**2D**8 with pressure reducing valve**[1)]

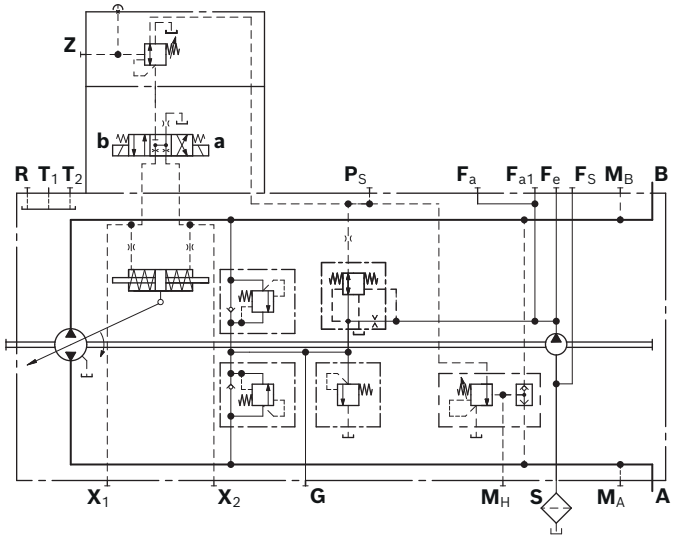

1) Size 28 without port $\mathbf{F}_{a1}$ and $\mathbf{F}_S$

DG – Hydraulic control, direct operated

With the direct operated hydraulic control (DG), the output flow of the pump is controlled by a hydraulic control pressure, applied directly to the stroking piston through either port $\mathbf{X}_1$ or $\mathbf{X}_2$.
Flow direction is determined by which control pressure port is pressurized.
Pump displacement is infinitely variable and proportional to the applied control pressure, but is also influenced by system pressure and pump drive speed.
In order to use the optional built-in pressure cut-off, port $\mathbf{P}_S$ must be used for the selected control module as source of the control pressure $\mathbf{X}_1$ and $\mathbf{X}_2$ generated on the customer side.
See page 85 for a functional description of the pressure cut-off.
Maximum permissible control pressure: 40 bar
Use of the DG control requires a review of the engine and vehicle parameters to ensure that the pump is set up correctly. We recommend that all DG applications be reviewed by a Bosch Rexroth application engineer.
If the pump is also equipped with a DA control valve (see page 17), automotive operation is possible for travel drives.

▼ **Circuit diagram, standard version**[1)]

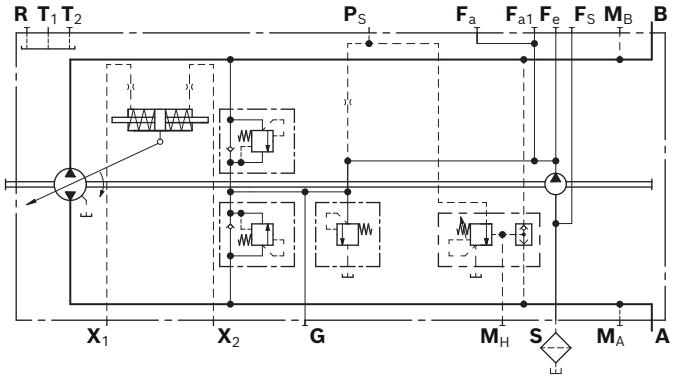

▼ **Circuit diagram, version with DA control valve**[1)]

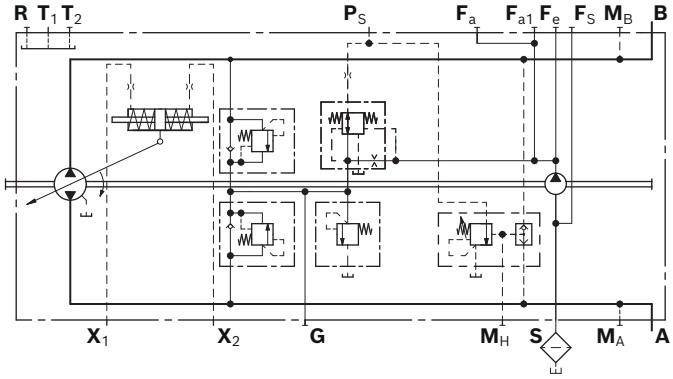

Correlation of direction of rotation, control and flow direction									
Direction of rotation		Clockwise				Counter-clockwise			
Size		28 … 56		71 … 180		28 … 56		71 … 180	
Control pressure		$\mathbf{X}_1$	$\mathbf{X}_2$	$\mathbf{X}_1$	$\mathbf{X}_2$	$\mathbf{X}_1$	$\mathbf{X}_2$	$\mathbf{X}_1$	$\mathbf{X}_2$
Port plate 02 and 10	Flow direction	**A** to **B**	**B** to **A**	**B** to **A**	**A** to **B**	**B** to **A**	**A** to **B**	**A** to **B**	**B** to **A**
	Working pressure	$\mathbf{M}_B$	$\mathbf{M}_A$	$\mathbf{M}_A$	$\mathbf{M}_B$	$\mathbf{M}_A$	$\mathbf{M}_B$	$\mathbf{M}_B$	$\mathbf{M}_A$
Port plate 03 and 13	Flow direction	**B** to **A**	**A** to **B**	**A** to **B**	**B** to **A**	**A** to **B**	**B** to **A**	**B** to **A**	**A** to **B**
	Working pressure	$\mathbf{M}_A$	$\mathbf{M}_B$	$\mathbf{M}_B$	$\mathbf{M}_A$	$\mathbf{M}_B$	$\mathbf{M}_A$	$\mathbf{M}_A$	$\mathbf{M}_B$

1) Size 28 without port $\mathbf{F}_{a1}$ and $\mathbf{F}_S$

EP – Proportional control, electric

The output flow of the pump is infinitely variable in the range between 0 to 100%, proportional to the electrical current supplied to solenoid. The flow is reversible, depending on solenoid side **a** or **b**. The magnetic force acts as a setpoint value on the control spool. It then directs control oil into and out of the stroking cylinder to adjust pump displacement according to the setpoint value. The mechanical feedback lever connected to the stroking piston closes the control circuit via a force comparison with the magnetic force. In this case, the pump swivel angle is adjusted proportionally to the control current. If the pump is also equipped with a DA control valve (see page 17), automotive operation is possible for travel drives.

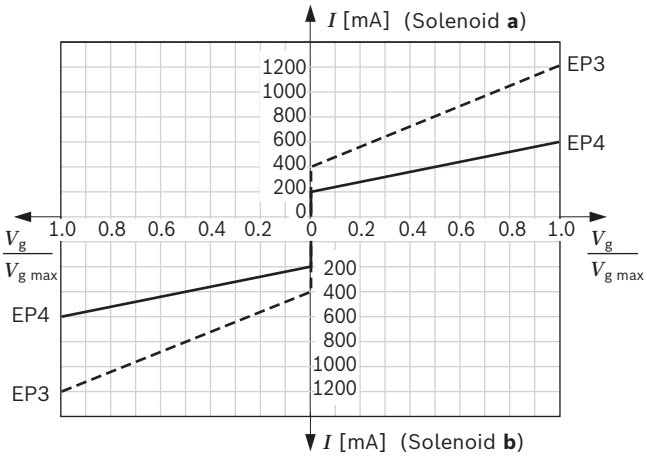

Notice
The proportional solenoids do not have manual override. Proportional solenoids with manual override and spring return are available on request.

Technical data, proportional solenoid	EP3	EP4
Voltage	12 V (±20%)	24 V (±20%)
Control current		
Start of control at V_g = 0	400 mA	200 mA
End of control at $V_{g\,max}$	1200 mA	600 mA
Current limit	1.54 A	0.77 A
Nominal resistance (at 20 °C)	5.5 Ω	22.7 Ω
Dither		
Frequency	100 Hz	100 Hz
Minimum oscillation range[1]	240 mA	120 mA
Duty cycle	100%	100%
Type of protection: see connector version page 94		

Various BODAS controllers with application software and amplifiers are available for controlling the proportional solenoids.
Further information can also be found on the Internet at www.boschrexroth.com/mobile-electronics

▼ **Circuit diagram, standard version**[2]

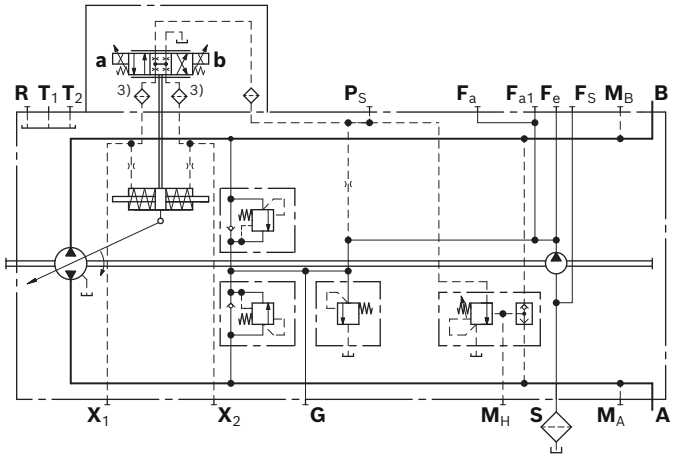

▼ **Circuit diagram, version with DA control valve**[2]

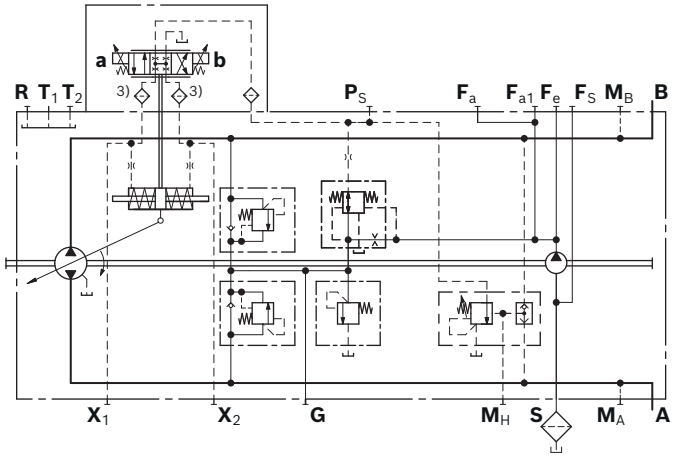

1) Minimum required oscillation range of the control current $\Delta I_{p\text{-}p}$ (peak to peak) within the respective control range (start of control to end of control)
2) Size 28 without port F_{a1} and F_S
3) Only sizes 28 to 71 are designed with inlet filtration in X_1/X_2

Correlation of direction of rotation, control and flow direction									
Direction of rotation		Clockwise				Counter-clockwise			
Size[1)]		28 ... 56		71 ... 180		28 ... 56		71 ... 180	
Actuation of proportional solenoid		**a**	**b**	**a**	**b**	**a**	**b**	**a**	**b**
Control pressure		X_1	X_2	X_1	X_2	X_1	X_2	X_1	X_2
Port plate 02 and 10	Flow direction	**A** to **B**	**B** to **A**	**B** to **A**	**A** to **B**	**B** to **A**	**A** to **B**	**A** to **B**	**B** to **A**
	Working pressure	M_B	M_A	M_A	M_B	M_A	M_B	M_B	M_A
Port plate 03 and 13	Flow direction	**B** to **A**	**A** to **B**	**A** to **B**	**B** to **A**	**A** to **B**	**B** to **A**	**B** to **A**	**A** to **B**
	Working pressure	M_A	M_B	M_B	M_A	M_B	M_A	M_A	M_B

▼ **Position of ports (example)**

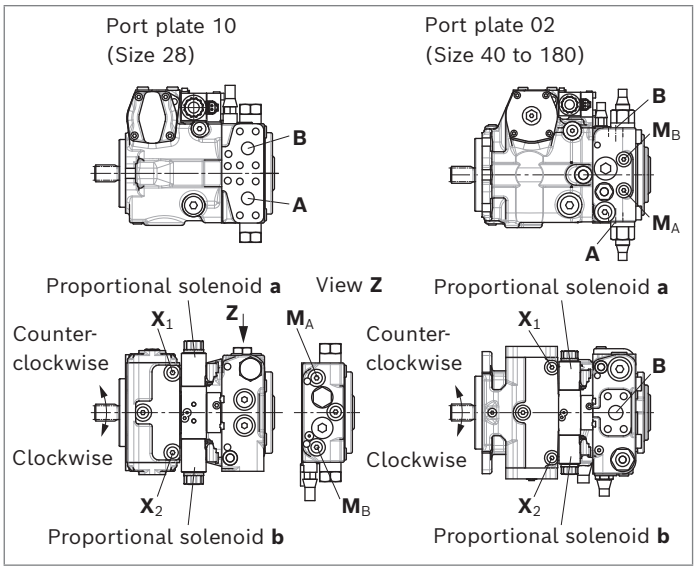

1) Available port plates per size, see type code position 15

EZ – Two-point control, electric

By actuating either switching solenoid **a** or **b**, internal control pressure is applied directly to the stroking piston and the pump swivels to maximum displacement.
The EZ control enables pump flow to be switched between V_g = 0 and $V_{g\,max}$.
Flow direction is determined by which solenoid is energized.

Technical data, switching solenoid	EZ1	EZ2
Voltage	12 V (±20%)	24 V (±20%)
Neutral position V_g = 0	de-energized	de-energized
Position $V_{g\,max}$	current switched on	current switched on
Nominal resistance (at 20 °C)	5.5 Ω	21.7 Ω
Nominal power	26.2 W	26.5 W
Minimum required active current	1.32 A	0.67 A
Duty cycle	100%	100%
Type of protection: see connector version page 94		

▼ **Circuit diagram, standard version**[1)]

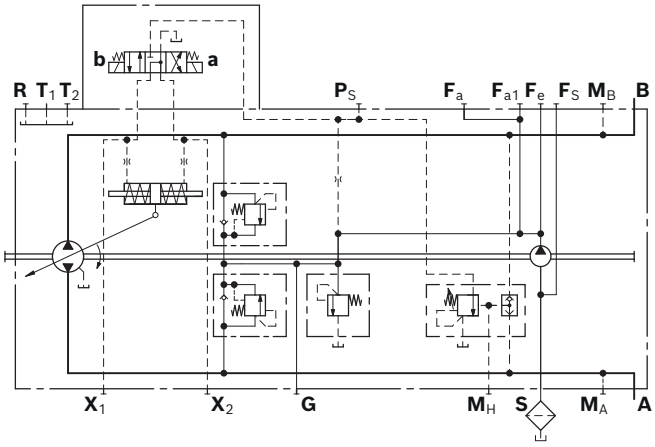

Correlation of direction of rotation, control and flow direction									
Direction of rotation		Clockwise				Counter-clockwise			
Size		28 ... 56		71 ... 180		28 ... 56		71 ... 180	
Actuation of switching solenoid		**a**	**b**	**a**	**b**	**a**	**b**	**a**	**b**
Control pressure		X_2	X_1	X_2	X_1	X_2	X_1	X_2	X_1
Port plate 02 and 10	Flow direction	**B** to **A**	**A** to **B**	**A** to **B**	**B** to **A**	**A** to **B**	**B** to **A**	**B** to **A**	**A** to **B**
	Working pressure	M_A	M_B	M_B	M_A	M_B	M_A	M_A	M_B
Port plate 03 and 13	Flow direction	**A** to **B**	**B** to **A**	**B** to **A**	**A** to **B**	**B** to **A**	**A** to **B**	**A** to **B**	**B** to **A**
	Working pressure	M_B	M_A	M_A	M_B	M_A	M_B	M_B	M_A

▼ **Position of ports (example)**

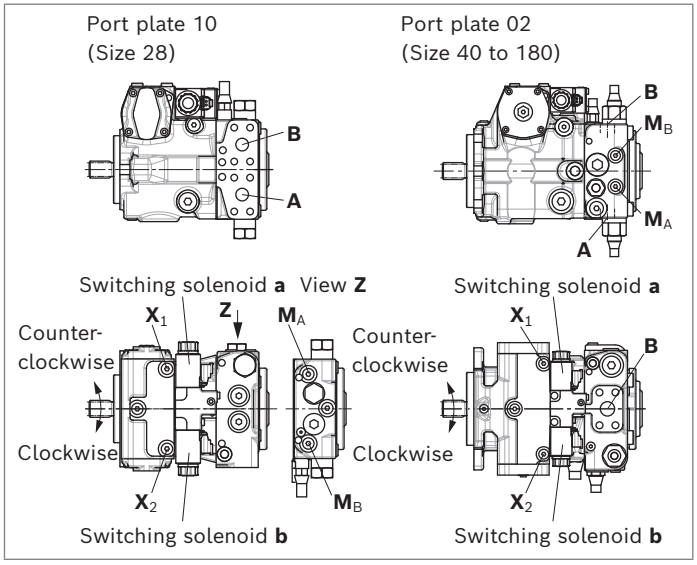

1) Size 28 without port F_{a1} and F_S

ET – electronic control, direct-operated

ETA/ETB – two pressure reducing valves; prepared for BODAS Software

The ETA/ETB control is optimized for electronic drives and is intended to be used together with the BODAS software. Here, all relevant configuration options have already been predefined and ensure an optimal interaction of pump and software thanks to the standardization. The pump function is largely determined by the software used.

The output flow of the pump is infinitely variable in the range between 0 and 100 %. Depending on the preselected current I at solenoids **a** and **b** of the pressure reducing valves, the stroking cylinder of the pump is proportionally supplied with control pressure. The two control pressures $\mathbf{X}_1$ and $\mathbf{X}_2$ can be controlled independently. The pump displacement that arises at acertain control current is dependent on the rotational speed and working pressure of the pump. A different flow direction is associated with each pressure reducing valve.
Maximum permissible control pressure at port $\mathbf{P}_S$: 40 bar.

Technical data, pressure reducing valve	ETA[1)]	ETB[1)]	ETA[2)]	ETB[2)]
	NG28, 40		NG125	
On-board voltage in the vehicle	12 V	24 V	12 V	24 V
Permissible voltage U	9.6 ... 28.8 V		9.6 ... 28.8 V	
Current limit	1.8 A		1.45 A	
Nominal resistance (at 20 °C)	2.4 Ω		4.05 Ω	
Dither				
Frequency	100 Hz		100 Hz	
minimum oscillation range[3)]	360 mA		250 mA	
Duty cycle	100 %		100 %	
Type of protection: see connector version page 94				

1) For further information on the pressure reducing valve, see data sheet 58032.
Notice: The leakage flow and the control flow differ from the parameter in data sheet 58032.
2) For further information on the pressure reducing valve, see data sheet 64659.
Notice: The leakage flow and the control flow differ from the parameter in data sheet 64659.
3) Minimum required oscillation range of the control current $\Delta I_{p\text{-}p}$ (peak to peak) within the respective control range (start of control to end of control)
4) Size 28 without port $\mathbf{F}_{a1}$ and $\mathbf{F}_S$

Notice
All control-relevant data are already stored in the software.

▼ **Circuit diagram ETA/ETB, sizes 28 and 40**[4)]

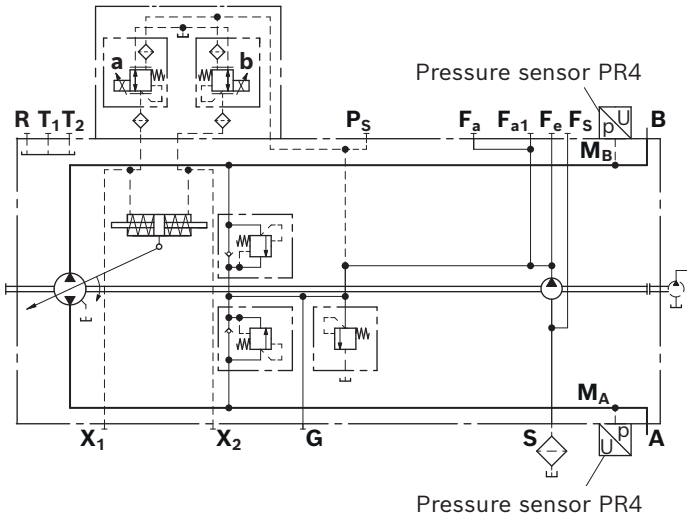

▼ **Circuit diagram ETA/ETB, size 125**

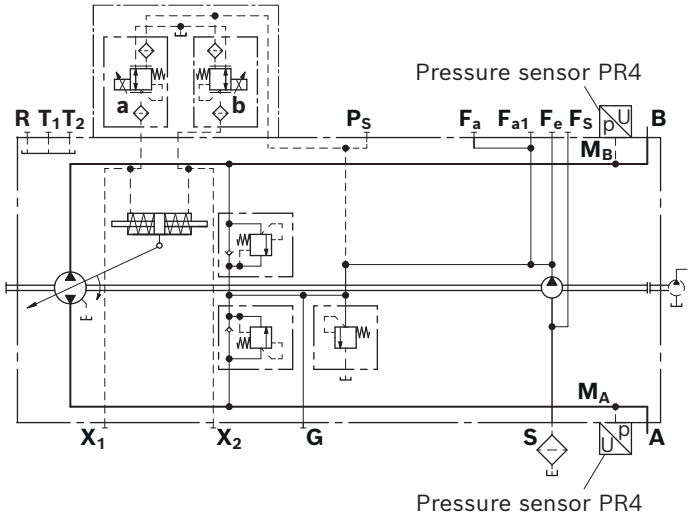

Correlation of direction of rotation, control and flow direction								
Direction of rotation	Clockwise				Counter-clockwise			
Size	28 ... 40		125		28 ... 40		125	
Actuation of pressure reducing valve	**a**	**b**	**a**	**b**	**a**	**b**	**a**	**b**
Control pressure	X_1	X_2	X_1	X_2	X_1	X_2	X_1	X_2
Flow direction	**A** to **B**	**B** to **A**	**B** to **A**	**A** to **B**	**B** to **A**	**A** to **B**	**A** to **B**	**B** to **A**
Working pressure	M_B	M_A	M_A	M_B	M_A	M_B	M_B	M_A

▼ **Position of ports**

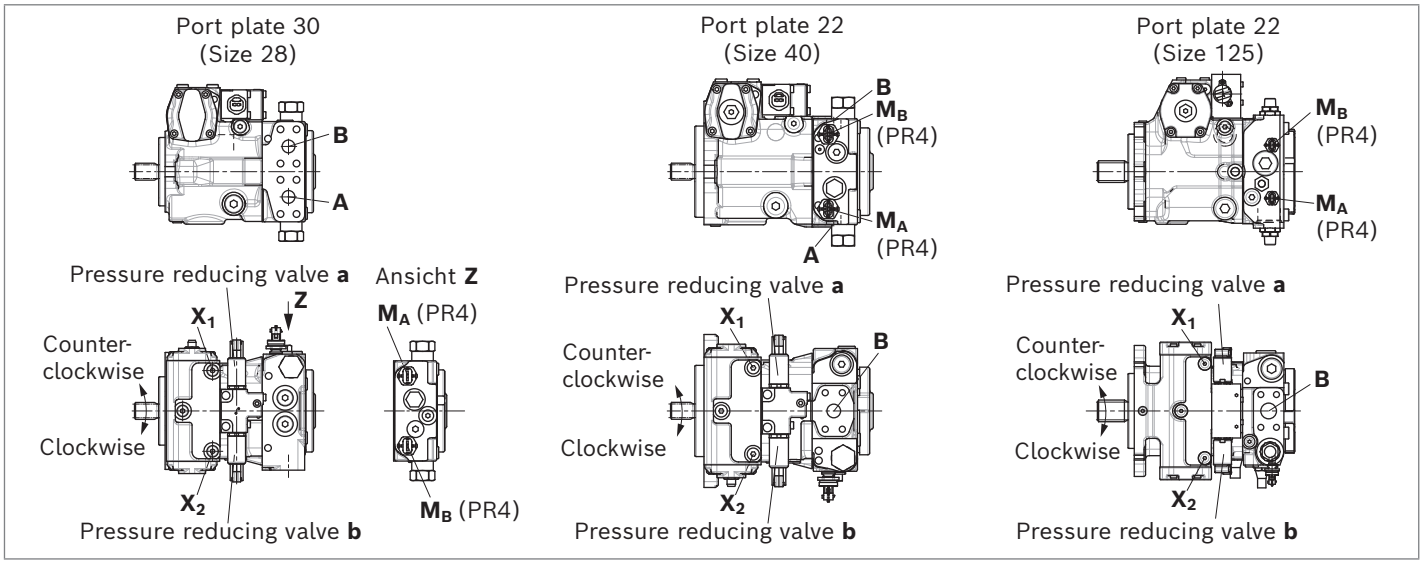

ET3/ET4 und ET7/ET8 – two pressure reducing valves

The output flow of the pump is infinitely variable in the range between 0 and 100 %. Depending on the preselected current I at solenoids **a** and **b** of the pressure reducing valves, the stroking cylinder of the pump is proportionally supplied with control pressure. The two control pressures $\mathbf{X}_1$ and $\mathbf{X}_2$ can be controlled independently. The pump displacement that arises at acertain control current is dependent on the rotational speed and working pressure of the pump. A different flow direction is associated with each pressure reducing valve. Maximum permissible control pressure at port $\mathbf{P}_S$: 40 bar.

Technical data, pressure reducing valve	ET3[1]	ET4[1]	ET7[2]	ET8[2]
On-board voltage in the vehicle	12 V	24 V	12 V	24 V
Permissible voltage U	9.6 ... 28.8 V		9.6 ... 28.8 V	
Current limit	1.8 A		1.45 A	
Nominal resistance (at 20 °C)	2.4 Ω		4.05 Ω	
Dither				
Frequency	100 Hz		100 Hz	
Minimum oscillation range[3]	360 mA		250 mA	
Duty cycle	100%		100%	
Type of protection: see connector version page 94				

▼ **Circuit diagram ET3/4, standard version**[4]

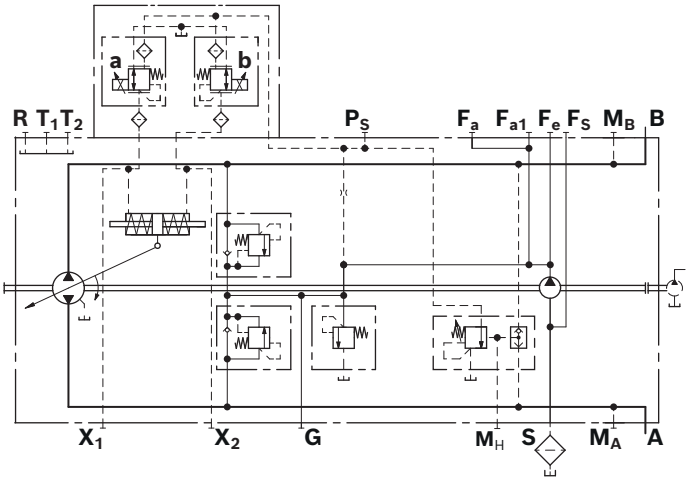

▼ **Circuit diagram ET7/8, standard version**

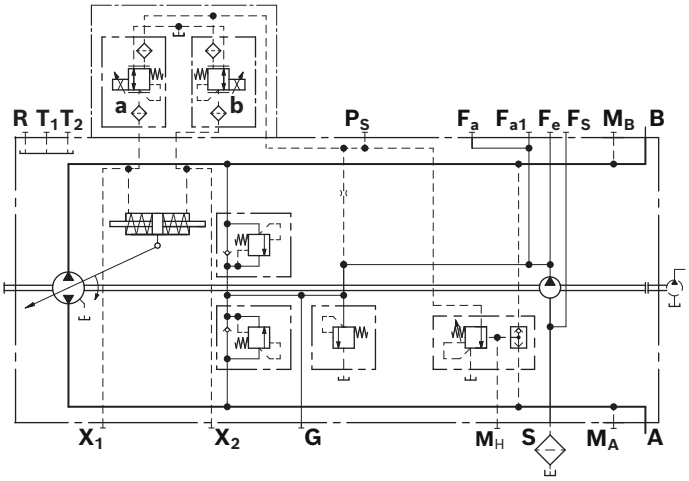

1) For further information on the pressure reducing valve, see data sheet 58032.
Notice: The leakage flow and the control flow differ from the parameter in data sheet 58032.

2) For further information on the pressure reducing valve, see data sheet 64659.
Notice: The leakage flow and the control flow differ from the parameter in data sheet 64659.

3) Minimum required oscillation range of the control current $\Delta I_{p\text{-}p}$ (peak to peak) within the respective control range (start of control to end of control)

4) Size 28 without port $\mathbf{F}_{a1}$ and $\mathbf{F}_S$

Correlation of direction of rotation, control and flow direction									
Direction of rotation		Clockwise				Counter-clockwise			
Size[1)]		28 ... 40		125		28 ... 40		125	
Actuation of pressure reducing valve		**a**	**b**	**a**	**b**	**a**	**b**	**a**	**b**
Control pressure		X_1	X_2	X_1	X_2	X_1	X_2	X_1	X_2
Port plate 02 and 10	Flow direction	**A** to **B**	**B** to **A**	**B** to **A**	**A** to **B**	**B** to **A**	**A** to **B**	**A** to **B**	**B** to **A**
	Working pressure	M_B	M_A	M_A	M_B	M_A	M_B	M_B	M_A
Port plate 03 and 13	Flow direction	**B** to **A**	**A** to **B**	**A** to **B**	**B** to **A**	**A** to **B**	**B** to **A**	**B** to **A**	**A** to **B**
	Working pressure	M_A	M_B	M_B	M_A	M_B	M_A	M_A	M_B

▼ **ET3/4 Position of ports (example)**

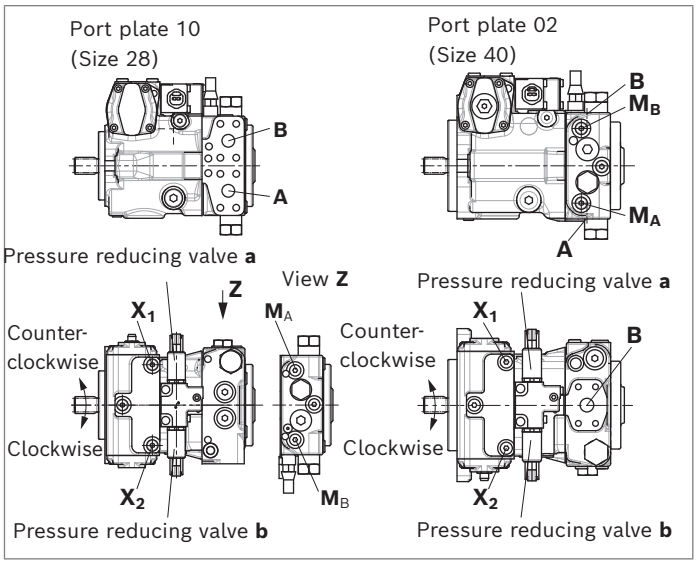

▼ **ET7/8 Position of ports**

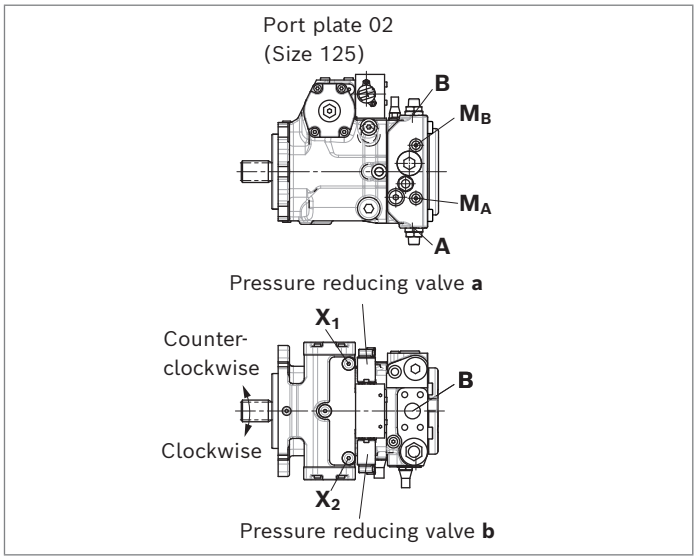

1) Depending on the size, different/not all port plates are available, see type code position 15

Dimensions, size 28

Version without control module

Standard: SAE working port **A** and **B**, same side right, suction port **S** bottom (10)

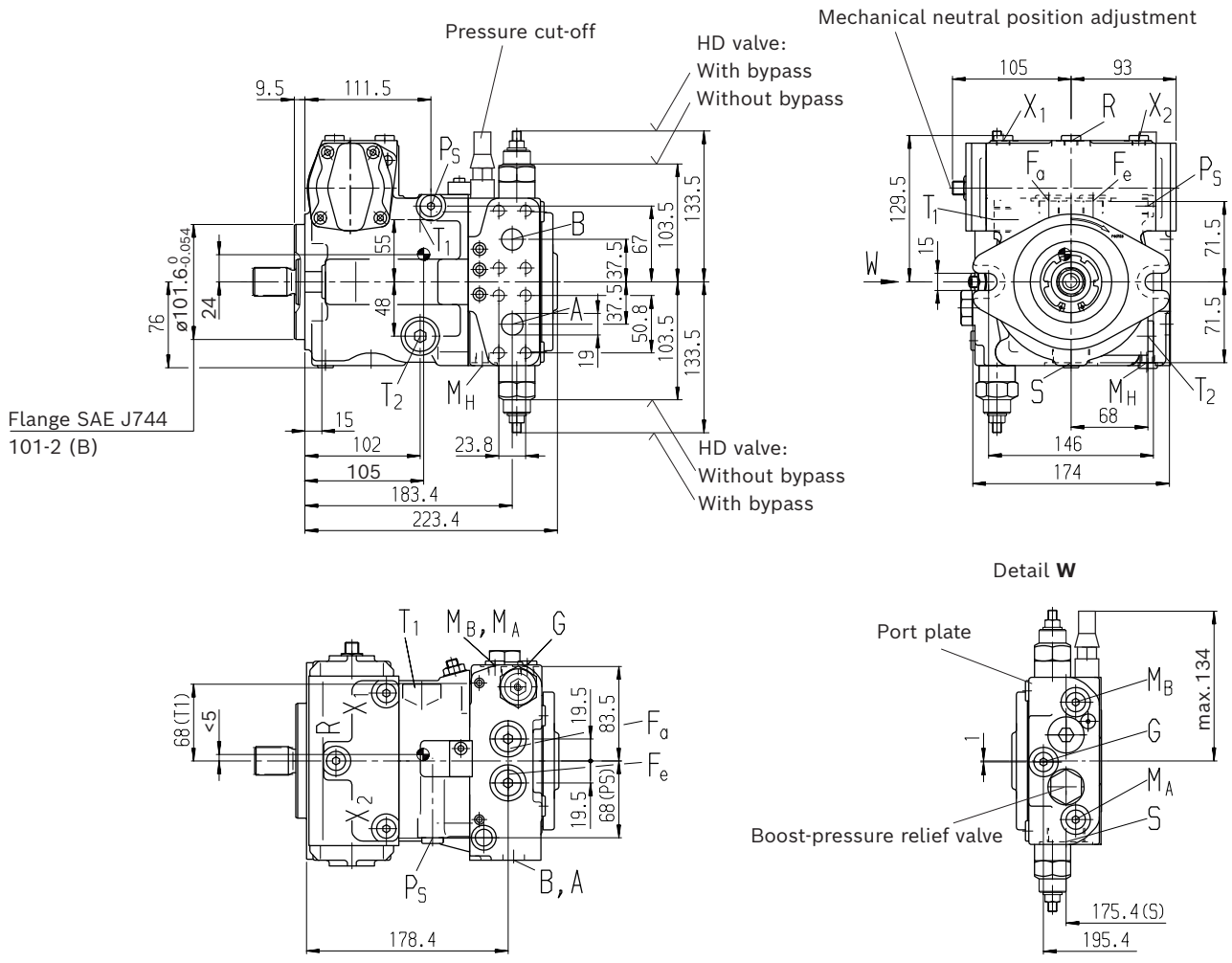

◕ Center of gravity

Notice

Option: SAE working port **A** and **B**, same side left, suction port **S** top (13): Port plate 10 rotated through 180°, installation drawing on request

▼ **Splined shaft DIN 5480**

Z – W25×1.25×18×9g

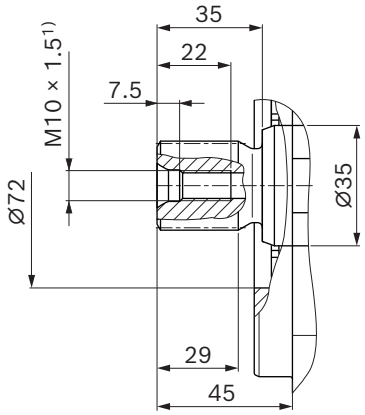

▼ **Splined shaft ANSI B92.1a**

S – 1 in 15T 16/32DP[2)]

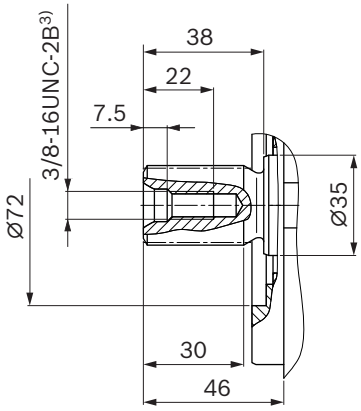

1) Center bore according to DIN 332 (thread according to DIN 13)
2) Involute spline according to ANSI B92.1a, 30° pressure angle, flat root, side fit, tolerance class 5
3) Thread according to ASME B1.1

▼ **Connection table for port plate 10 and 13**

Ports		Standard	Size	p_{max} [bar][4]	State[11]
A, B	Working port Fastening thread	SAEJ518[5] DIN 13	3/4 in M10 × 1.5; 17 deep	450	O
S	Suction port	DIN 3852[8]	M33 × 2; 18 deep	5	O[6]
$\mathbf{T}_1$	Drain port	DIN 3852[8]	M22 × 1.5; 14 deep	3	O[7]
$\mathbf{T}_2$	Drain port	DIN 3852[8]	M22 × 1.5; 14 deep	3	X[7]
R	Air bleed port	DIN 3852[8]	M12 × 1.5; 12 deep	3	X
$\mathbf{X}_1$, $\mathbf{X}_2$	Control pressure port (upstream of orifice)	DIN 3852[8]	M12 × 1.5; 12 deep	40	X
$\mathbf{X}_1$, $\mathbf{X}_2$	Control pressure port (upstream of orifice, DG only)	DIN 3852[8]	M12 × 1.5; 12 deep	40	O
$\mathbf{X}_3$, $\mathbf{X}_4$[9]	Stroking chamber pressure port	DIN 3852[8]	M12 × 1.5; 12 deep	40	X
G	Boost pressure port inlet	DIN 3852[8]	M12 × 1.5; 12 deep	40	X
$\mathbf{P}_S$	Pilot pressure port	DIN 3852[8]	M14 × 1.5; 12 deep	40	X
$\mathbf{P}_S$	Pilot pressure port (DA..7 only)	DIN 3852[8]	M14 × 1.5; 12 deep	40	O
Y	Pilot pressure port outlet (only DA..7)	DIN 3852[8]	M14 × 1.5; 12 deep	40	O
$\mathbf{M}_A$, $\mathbf{M}_B$	Measuring port pressure A, B	DIN 3852[8]	M12 × 1.5; 12 deep	450	X
$\mathbf{M}_H$	Measuring port, high pressure	DIN 3852[8]	M12 × 1.5; 12 deep	450	X
$\mathbf{F}_a$	Boost pressure port inlet	DIN 3852[8]	M18 × 1.5; 12 deep	40	X
$\mathbf{F}_e$	Boost pressure port outlet	DIN 3852[8]	M18 × 1.5; 12 deep	40	X
$\mathbf{Y}_1$, $\mathbf{Y}_2$	Pilot pressure port (pilot signal HD only)	DIN 3852[8]	M14 × 1.5; 12 deep	40	O
Z	Pilot pressure port (inch signal only DA..8)	DIN 3852[8]	M10 × 1; 8 deep	80	X

▼ **Connection table for port plate 30**

Ports		Standard	Size	p_{max} [bar][4]	State[11]
A, B	Working port Fastening thread	SAEJ518[5] DIN 13	3/4 in M10 × 1.5; 17 deep	450	O
S	Suction port	ISO 6149[10]	M33 × 2; 19 deep	5	O[6]
$\mathbf{T}_1$	Drain port	ISO 6149[10]	M22 × 1.5; 14 deep	3	O[7]
$\mathbf{T}_2$	Drain port	ISO 6149[10]	M22 × 1.5; 14 deep	3	X[7]
R	Air bleed port	ISO 6149[10]	M12 × 1.5; 12 deep	3	X
$\mathbf{X}_1$, $\mathbf{X}_2$	Control pressure port (upstream of orifice)	ISO 6149[10]	M12 × 1.5; 12 deep	40	X
G	Boost pressure port inlet	ISO 6149[10]	M14 × 1.5; 11.5 deep	40	X
$\mathbf{P}_S$	Pilot pressure port	ISO 6149[10]	M14 × 1.5; 12 deep	40	X
$\mathbf{M}_A$, $\mathbf{M}_B$	Measuring port pressure A, B	ISO 6149[10]	M14 × 1.5; 11.5 deep	450	X
$\mathbf{F}_a$	Boost pressure port inlet	ISO 6149[10]	M18 × 1.5; 14.5 deep	40	X
$\mathbf{F}_e$	Boost pressure port outlet	ISO 6149[10]	M18 × 1.5; 14.5 deep	40	X

4) Depending on the application, momentary pressure peaks can occur. Keep this in mind when selecting measuring devices and fittings.
5) Only dimensions according to SAE J518, metric fastening thread is a deviation from the standard.
6) Plugged for external boost pressure supply.
7) Depending on installation position, $\mathbf{T}_1$ or $\mathbf{T}_2$ must be connected (see also installation instructions on page 97).
8) The countersink may be deeper than specified in the standard. Ports designed for straight stud ends according to EN ISO 9974-2 type E
9) Optional, see page 87
10) The countersink may be deeper than specified in the standard. Ports designed for straight stud ends according to EN ISO 6149-2
11) O = Must be connected (plugged on delivery)
X = Plugged (observe installation instructions)

▼ **HD** – Proportional control, hydraulic, pilot-pressure related

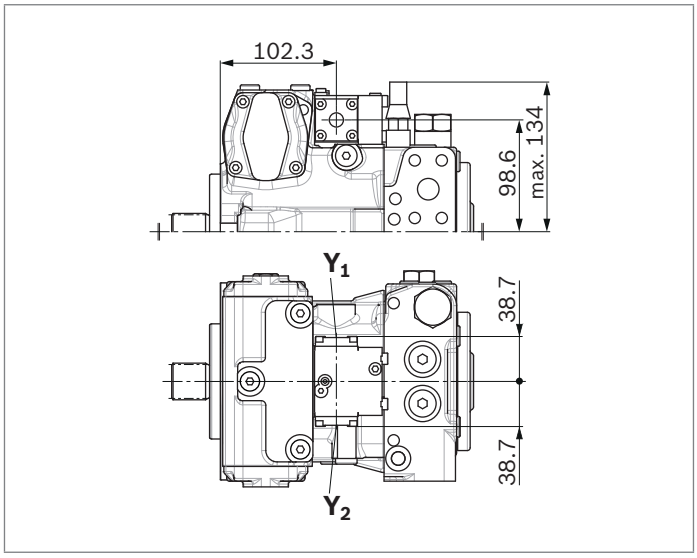

▼ **HW** – Proportional control, hydraulic, mechanical servo

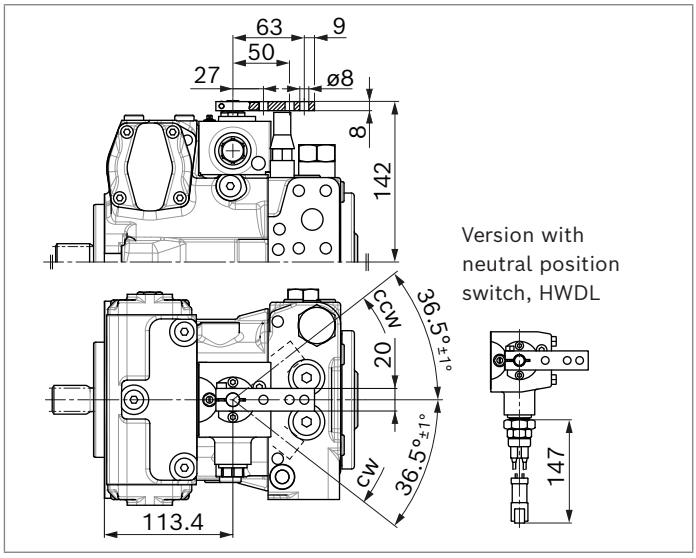

▼ **EP** – Proportional control, electric

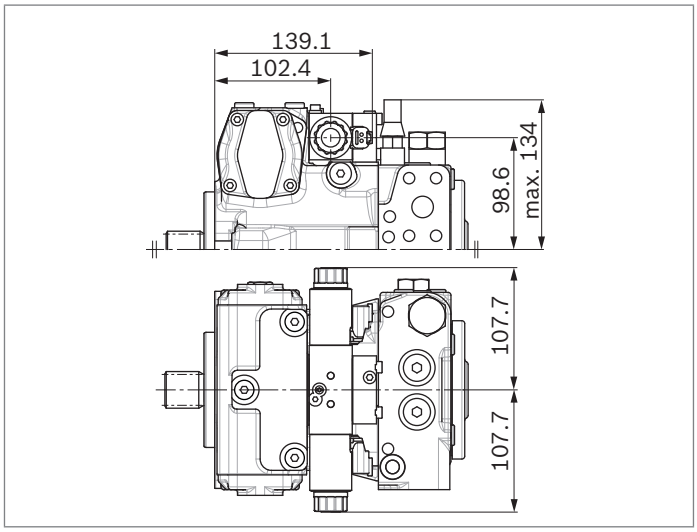

▼ **EZ** – Two-point control, electric

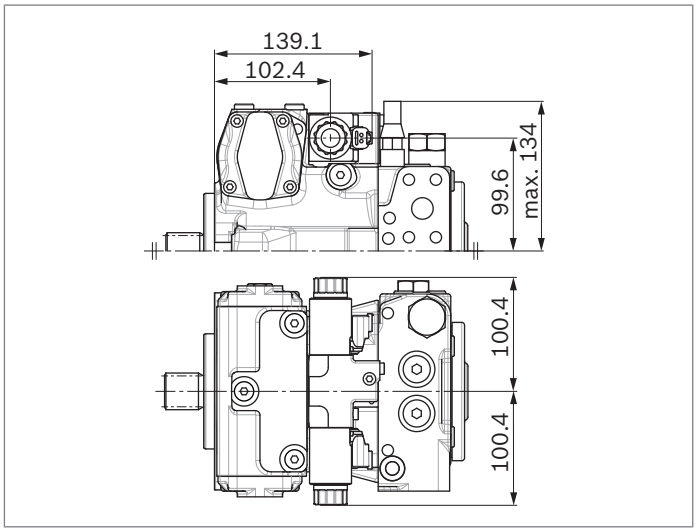

▼ **DG** – Hydraulic control, direct operated

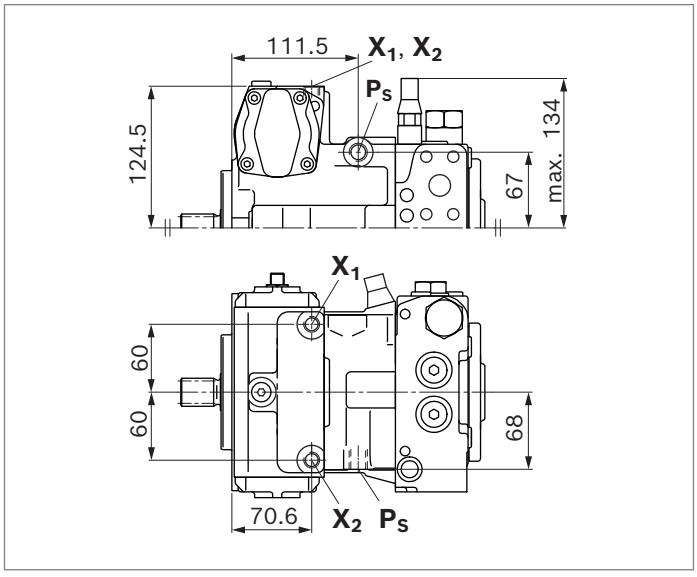

▼ **ET3/ET4** – Electronic control, direct operated, two FTDRE

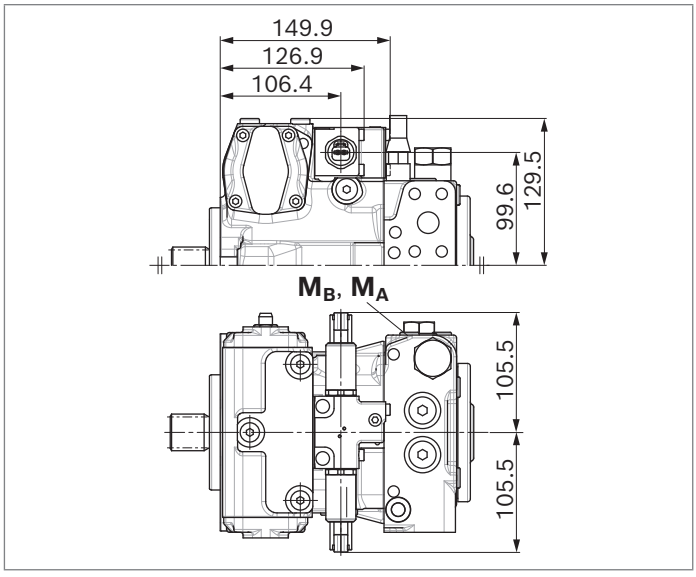

▼ **ETA/ETB** – Electronic control, direct operated, prepared for BODAS software

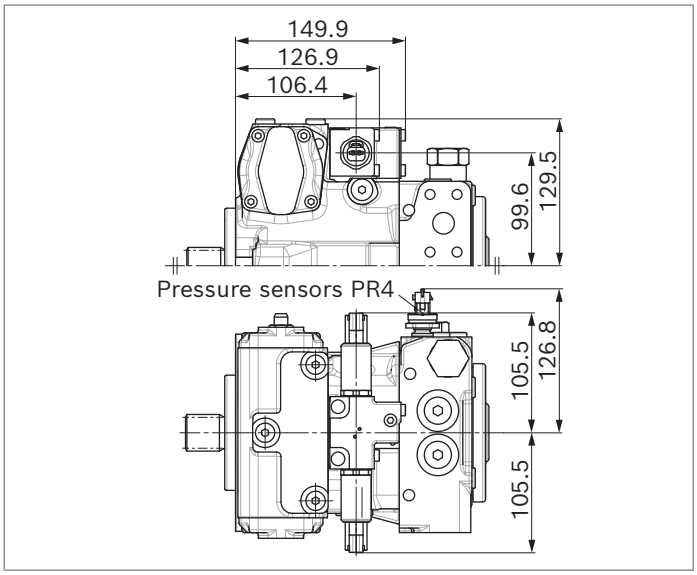

DA control valve

▼ **DA..2** – Fixed setting

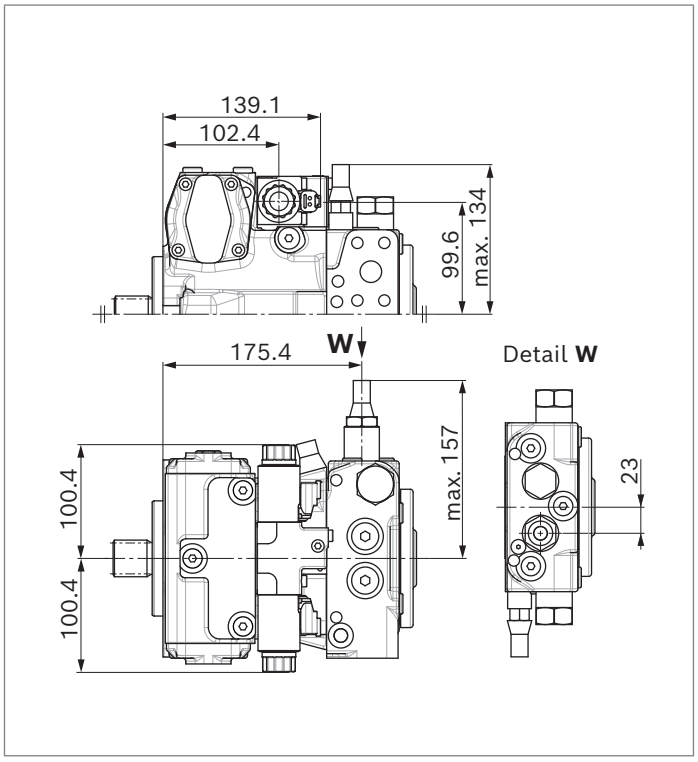

▼ **DA..3** – Mechanically adjustable with position lever

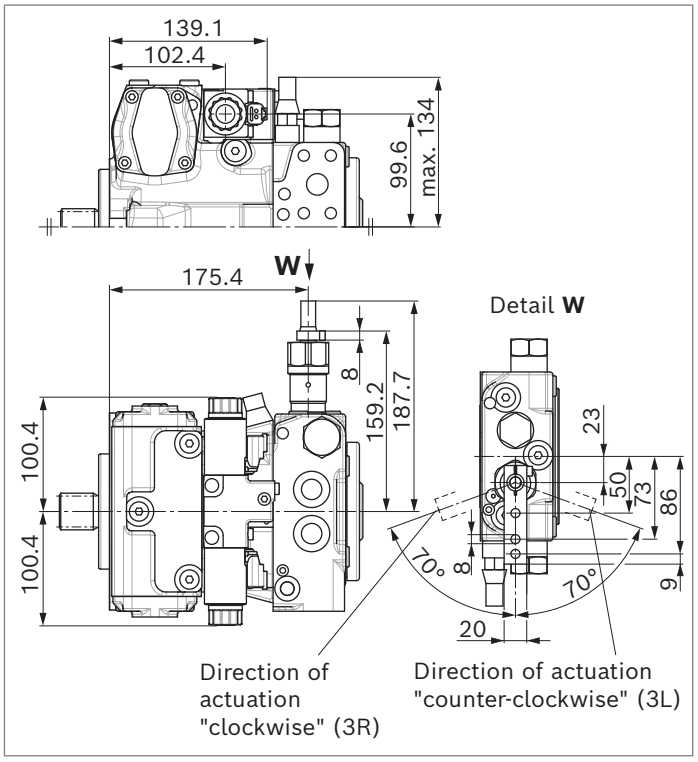

▼ **DA..7** – Fixed setting and ports for pilot control device

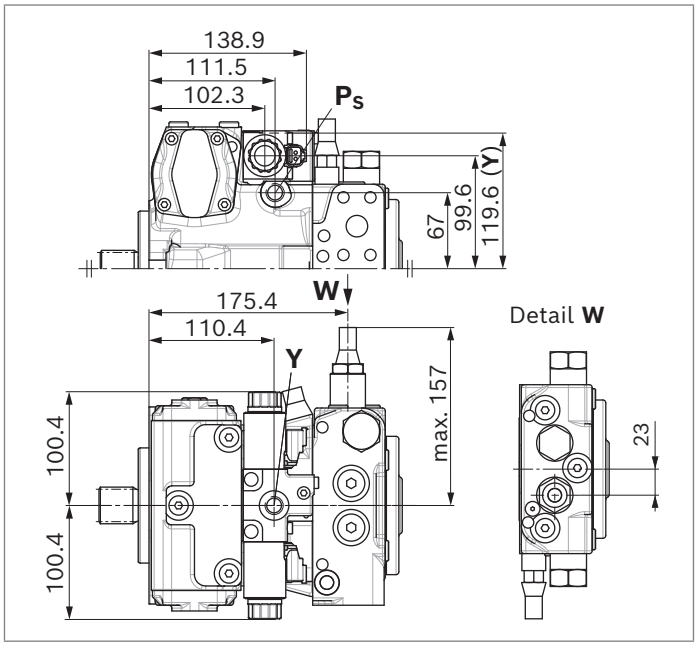

▼ **DA..8** – Fixed setting and inch valve mounted

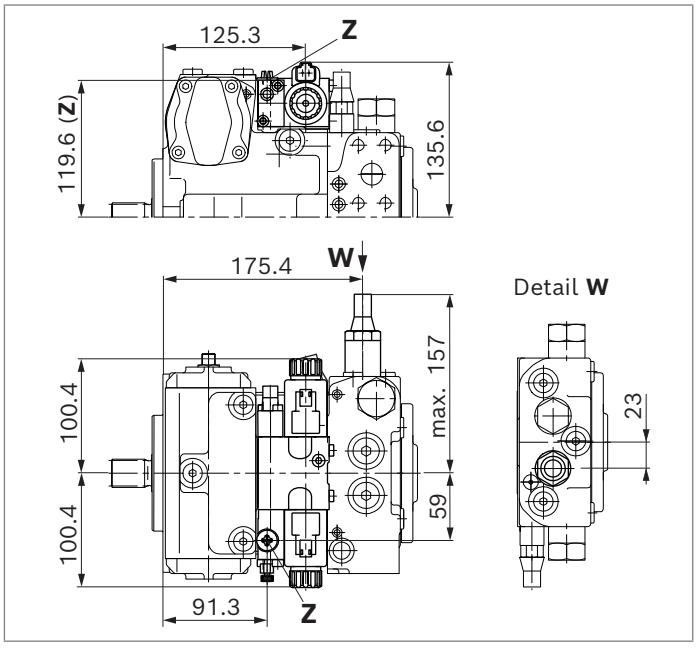

Dimensions, size 40

Version without control module

Standard: SAE working port **A** and **B** top and bottom, suction port **S** bottom (02)

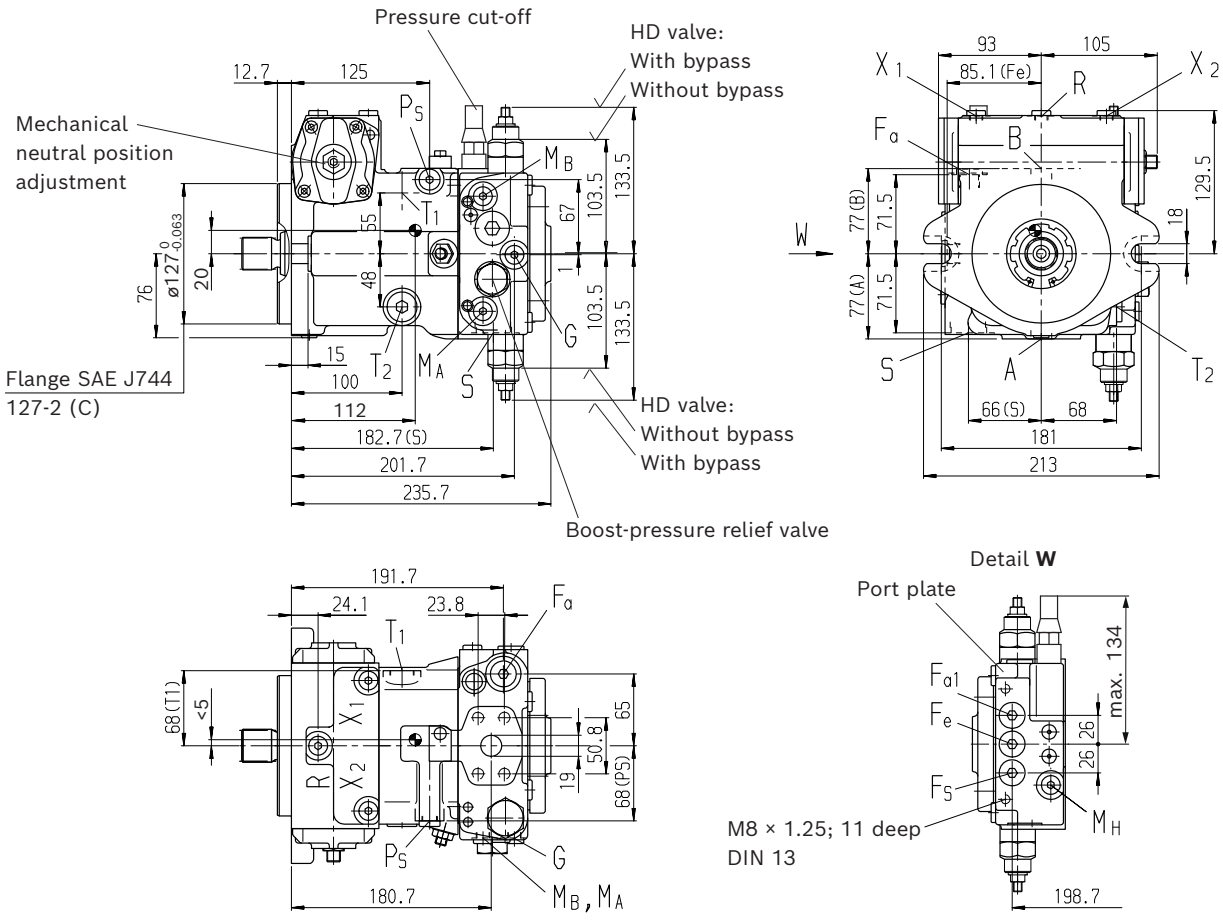

Center of gravity

Notice

Option: SAE working port **A** and **B** top and bottom, suction port **S** top (03), port plate (02) rotated through 180°, installation drawing on request

▼ **Splined shaft DIN 5480**

Z – W30×2×14×9g

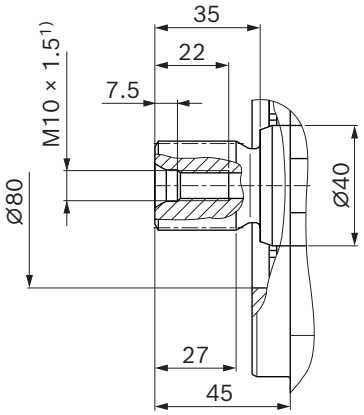

▼ **Splined shaft DIN 5480**

A – W35×2×16×9g

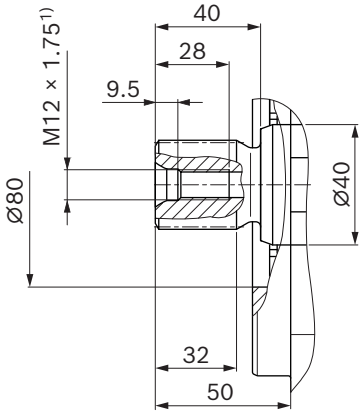

▼ **Splined shaft ANSI B92.1a**

S – 1 1/4 in 14T 12/24DP[2)]

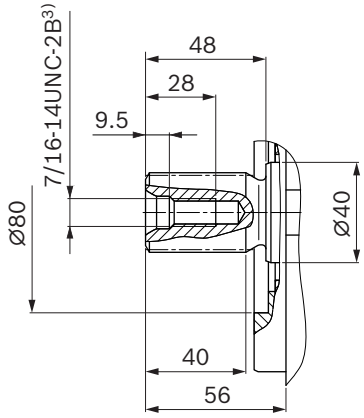

▼ **Splined shaft ANSI B92.1a**

U – 1 in 15T 16/32DP[2)]

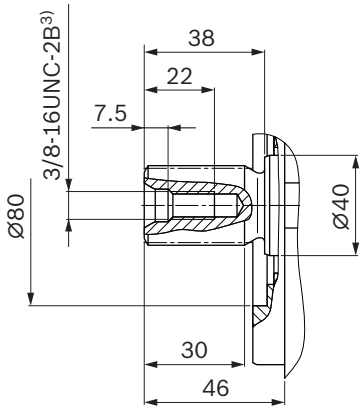

1) Center bore according to DIN 332 (thread according to DIN 13)
2) Involute spline according to ANSI B92.1a, 30° pressure angle, flat root, side fit, tolerance class 5
3) Thread according to ASME B1.1

▼ **Connection table for port plate 02 and 03**

Ports		Standard	Size	p_{max} [bar][4]	State[12]
A, B	Working port Fastening thread	SAEJ518[5] DIN 13	3/4 in M10 × 1.5; 17 deep	450	O
S	Suction port	DIN 3852[8]	M33 × 2; 18 deep	5	O[6]
$\mathbf{T}_1$	Drain port	DIN 3852[8]	M22 × 1.5; 14 deep	3	O[7]
$\mathbf{T}_2$	Drain port	DIN 3852[8]	M22 × 1.5; 14 deep	3	X[7]
R	Air bleed port	DIN 3852[8]	M12 × 1.5; 12 deep	3	X
$\mathbf{X}_1$, $\mathbf{X}_2$	Control pressure port (upstream of orifice)	DIN 3852[8]	M12 × 1.5; 12 deep	40	X
$\mathbf{X}_1$, $\mathbf{X}_2$	Control pressure port (upstream of orifice, DG only)	DIN 3852[8]	M12 × 1.5; 12 deep	40	O
$\mathbf{X}_3$, $\mathbf{X}_4$[9]	Stroking chamber pressure port	DIN 3852[8]	M12 × 1.5; 12 deep	40	X
G	Boost pressure port inlet	DIN 3852[8]	M12 × 1.5; 12 deep	40	X
$\mathbf{P}_S$	Pilot pressure port	DIN 3852[8]	M14 × 1.5; 12 deep	40	X
$\mathbf{P}_S$	Pilot pressure port (DA..7 only)	DIN 3852[8]	M14 × 1.5; 12 deep	40	O
Y	Pilot pressure port outlet (only DA..7)	DIN 3852[8]	M14 × 1.5; 12 deep	40	O
$\mathbf{M}_A$, $\mathbf{M}_B$	Measuring port pressure A, B	DIN 3852[8]	M12 × 1.5; 12 deep	450	X
$\mathbf{M}_H$	Measuring port, high pressure	DIN 3852[8]	M12 × 1.5; 12 deep	450	X
$\mathbf{F}_a$	Boost pressure port inlet	DIN 3852[8]	M18 × 1.5; 12 deep	40	X
$\mathbf{F}_{a1}$[10]	Boost pressure port inlet (attachment filter)	DIN 3852[8]	M18 × 1.5; 12 deep	40	X
$\mathbf{F}_e$[10]	Boost pressure port outlet	DIN 3852[8]	M18 × 1.5; 12 deep	40	X
$\mathbf{F}_S$[10]	Line from filter to suction port (cold start)	DIN 3852[8]	M18 × 1.5; 12 deep	40	X
$\mathbf{Y}_1$, $\mathbf{Y}_2$	Pilot pressure port (pilot signal HD only)	DIN 3852[8]	M14 × 1.5; 12 deep	40	O
Z	Pilot pressure port (inch signal only DA..8)	DIN 3852[8]	M10 × 1; 8 deep	80	X

▼ **Connection table for port plate 22**

Ports		Standard	Size	p_{max} [bar][4]	State[12]
A, B	Working port Fastening thread	SAEJ518[5] DIN 13	3/4 in M10 × 1.5; 17 deep	450	O
S	Suction port	ISO 6149[11]	M33 × 2; 19 deep	5	O[6]
$\mathbf{T}_1$	Drain port	ISO 6149[11]	M22 × 1.5; 14 deep	3	O[7]
$\mathbf{T}_2$	Drain port	ISO 6149[11]	M22 × 1.5; 14 deep	3	X[7]
R	Air bleed port	ISO 6149[11]	M12 × 1.5; 12 deep	3	X
$\mathbf{X}_1$, $\mathbf{X}_2$	Control pressure port (upstream of orifice)	ISO 6149[11]	M12 × 1.5; 12 deep	40	X
G	Boost pressure port inlet	ISO 6149[11]	M14 × 1.5; 11.5 deep	40	X
$\mathbf{P}_S$	Pilot pressure port	ISO 6149[11]	M14 × 1.5; 12 deep	40	X
$\mathbf{M}_A$, $\mathbf{M}_B$	Measuring port pressure A, B	ISO 6149[11]	M14 × 1.5; 11.5 deep	450	X
$\mathbf{F}_a$	Boost pressure port inlet	ISO 6149[11]	M18 × 1.5; 14.5 deep	40	X
$\mathbf{F}_{a1}$[10]	Boost pressure port inlet (attachment filter)	DIN 3852[8]	M18 × 1.5; 12 deep	40	X
$\mathbf{F}_e$[10]	Boost pressure port outlet	DIN 3852[8]	M18 × 1.5; 12 deep	40	X
$\mathbf{F}_S$[10]	Line from filter to suction port (cold start)	DIN 3852[8]	M18 × 1.5; 12 deep	40	X

4) Depending on the application, momentary pressure peaks can occur. Keep this in mind when selecting measuring devices and fittings.
5) Only dimensions according to SAE J518, metric fastening thread is a deviation from the standard.
6) Plugged for external boost pressure supply.
7) Depending on installation position, $\mathbf{T}_1$ or $\mathbf{T}_2$ must be connected (see also installation instructions on page 97).
8) The countersink may be deeper than specified in the standard. Ports designed for straight stud ends according to EN ISO 9974-2 type E
9) Optional, see page 87
10) The diameter of the countersink deviates from the standard. (For details, see page 90, dimensions of the countersinks)
11) The countersink may be deeper than specified in the standard. Ports designed for straight stud ends according to EN ISO 6149-2
12) O = Must be connected (plugged on delivery)
X = Plugged (in normal operation)

▼ **HD** – Proportional control, hydraulic, pilot-pressure related

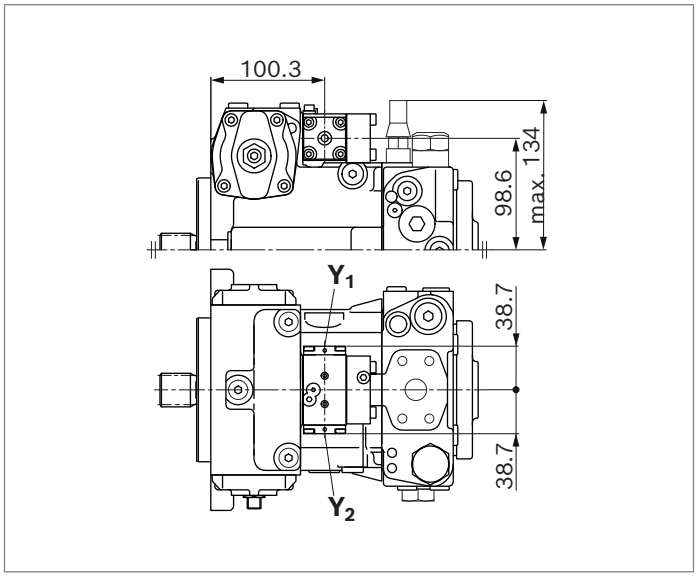

▼ **HW** – Proportional control, hydraulic, mechanical servo

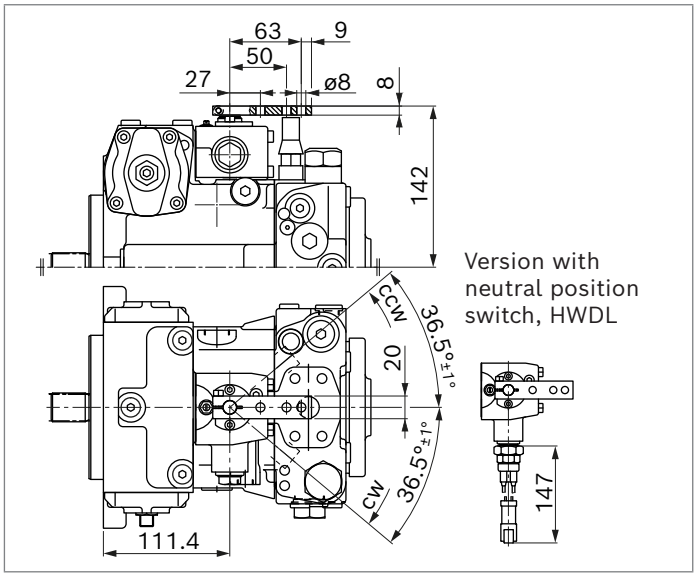

▼ **EP** – Proportional control, electric

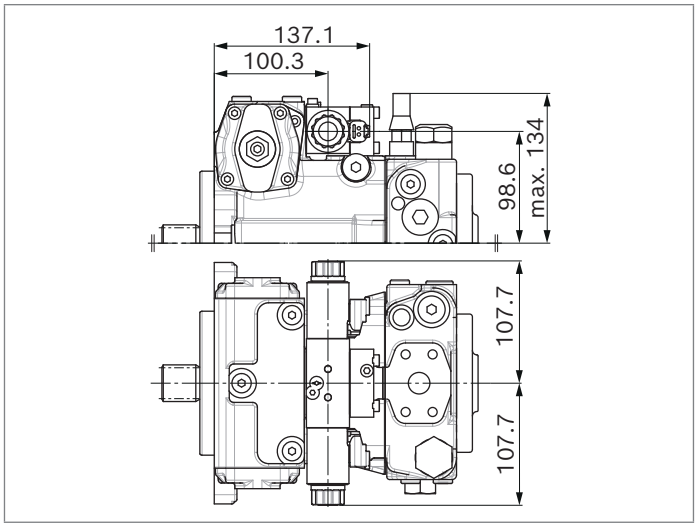

▼ **EZ** – Two-point control, electric

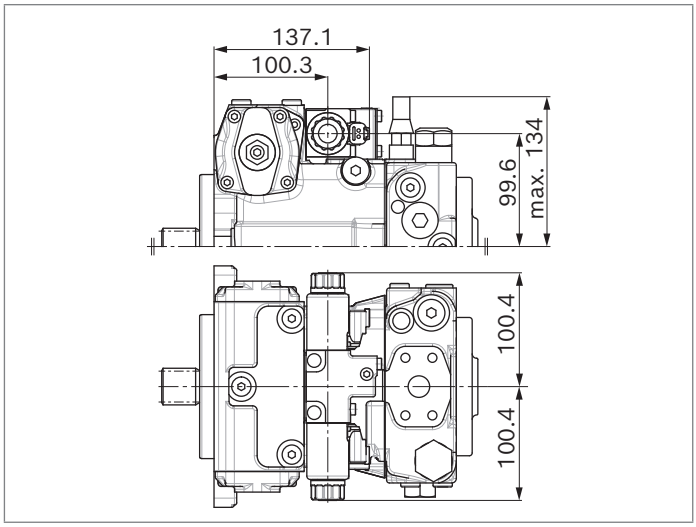

▼ **DG** – Hydraulic control, direct operated

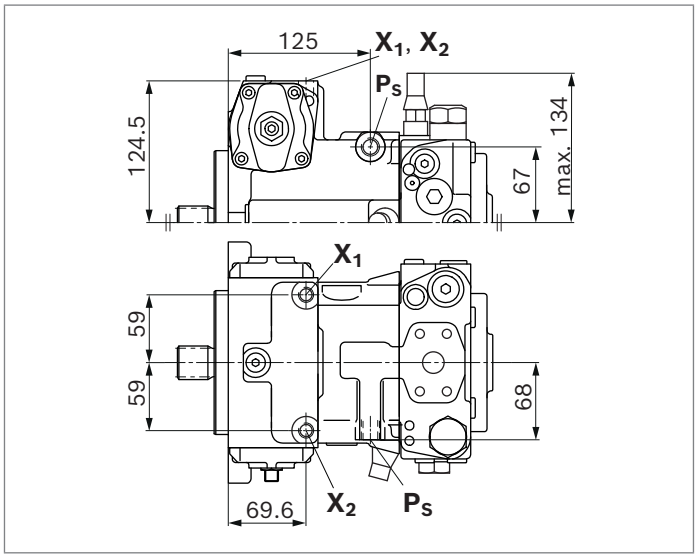

▼ **ET3/ET4** – Electronic control, direct operated, two FTDRE

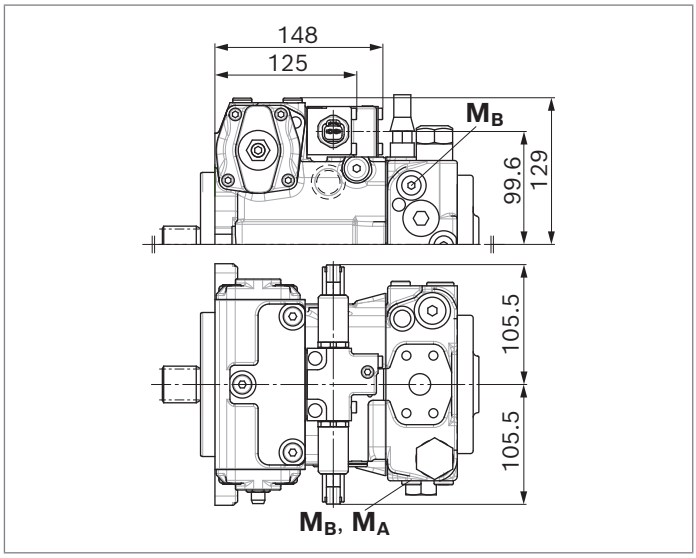

▼ **ETA/ETB** – Electronic control, direct operated, prepared for BODAS software

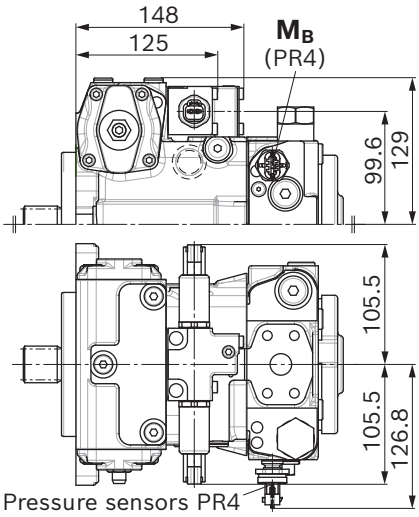

DA control valve

▼ **DA..2** – Fixed setting

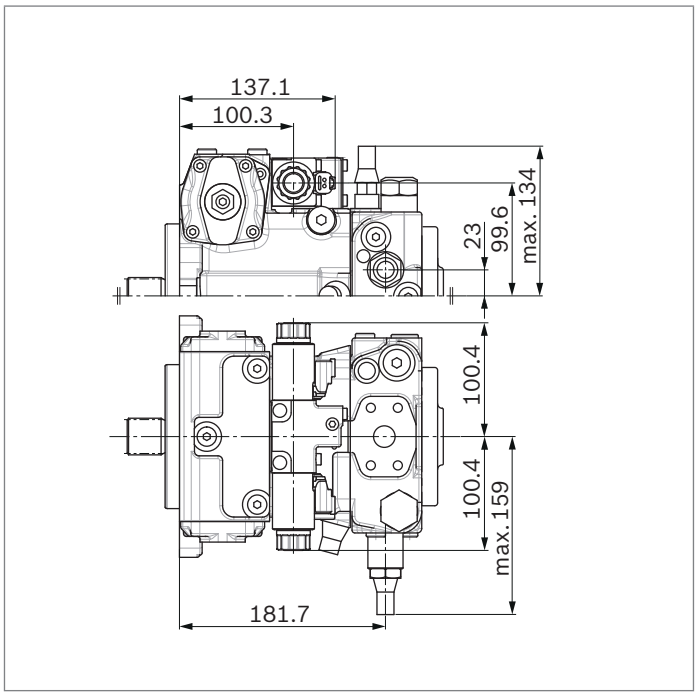

▼ **DA..3** – Mechanically adjustable with position lever

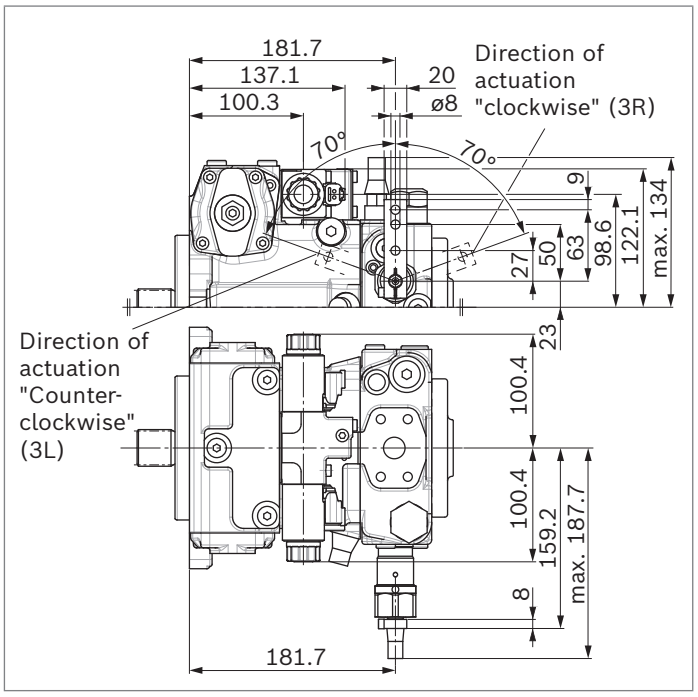

▼ **DA..7** – Fixed setting and ports for pilot control device

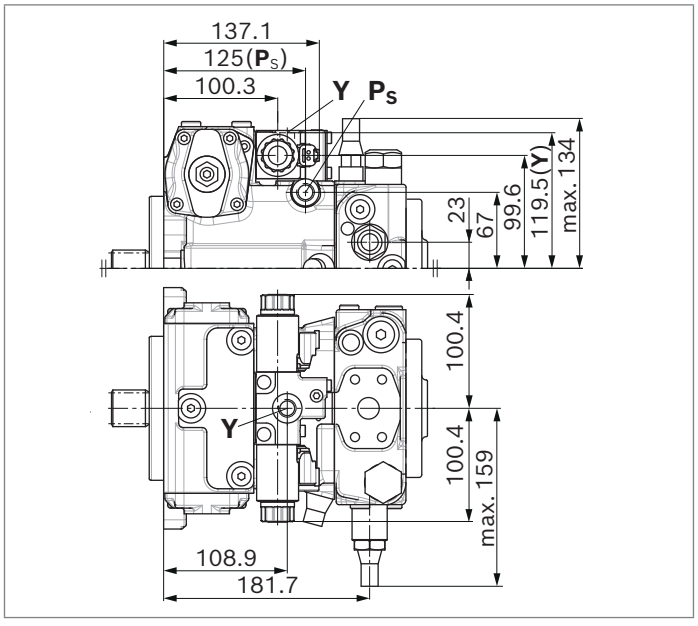

▼ **DA..8** – Fixed setting and inch valve mounted

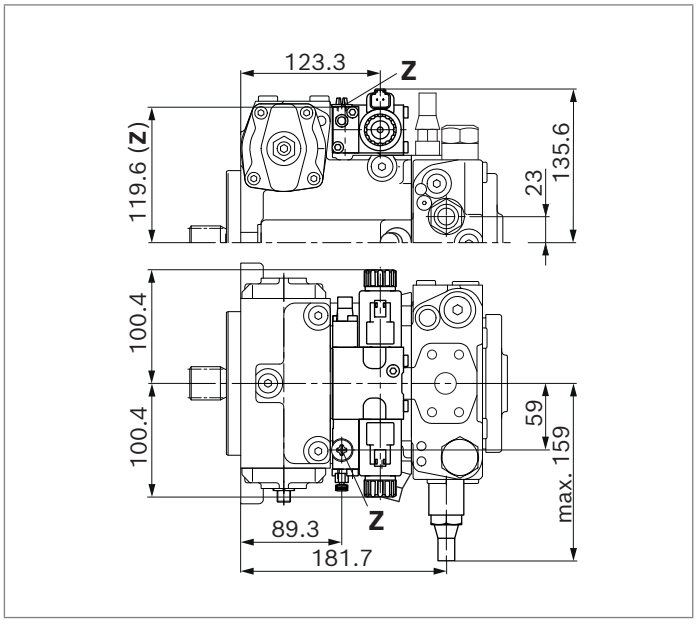

Dimensions, size 56

Version without control module

Standard: SAE working port **A** and **B** top and bottom, suction port **S** bottom (02)

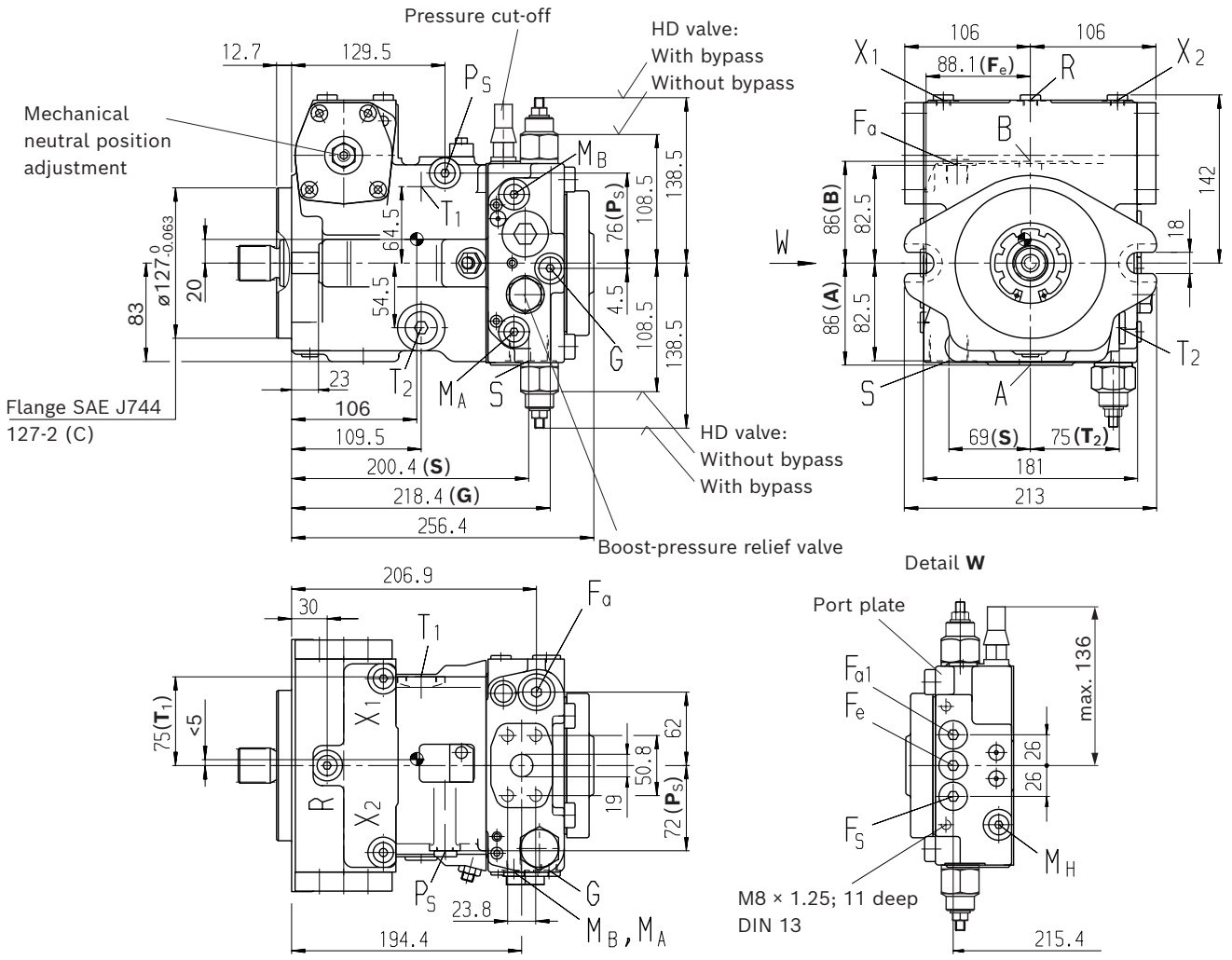

Notice

Option: SAE working port **A** and **B** top and bottom, suction port **S** top (03), port plate (02) rotated through 180°, installation drawing on request

Version without control module

Option: SAE working port **A** and **B**, same side left, suction port **S** top (13)

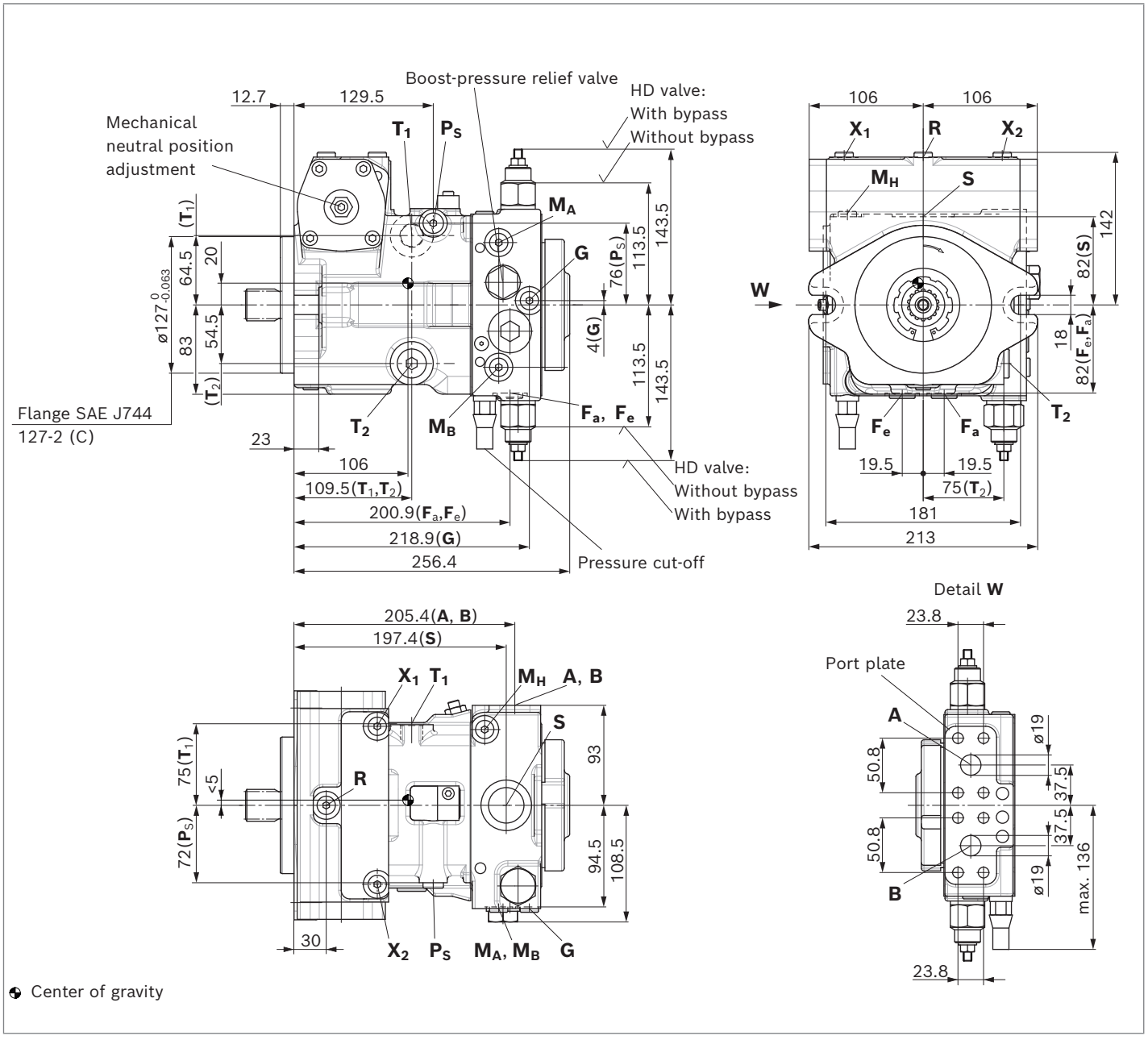

▼ **Splined shaft DIN 5480**

Z – W30×2×14×9g

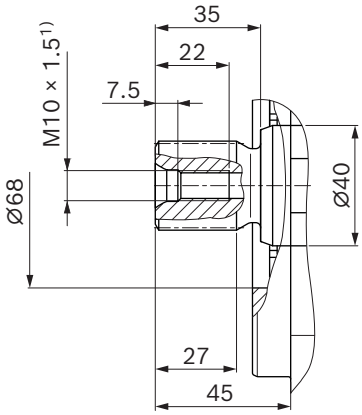

▼ **Splined shaft DIN 5480**

A – W35×2×16×9g

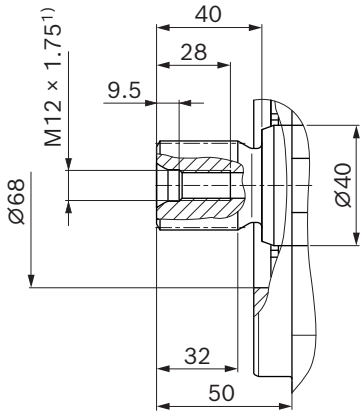

▼ **Splined shaft ANSI B92.1a**

S – 1 1/4 in 14T 12/24DP[2)]

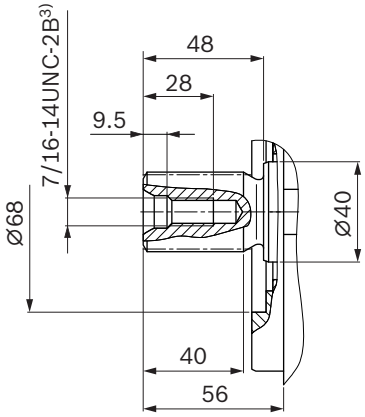

▼ **Splined shaft ANSI B92.1a**

T – 1 3/8 in 21T 16/32DP[2)]

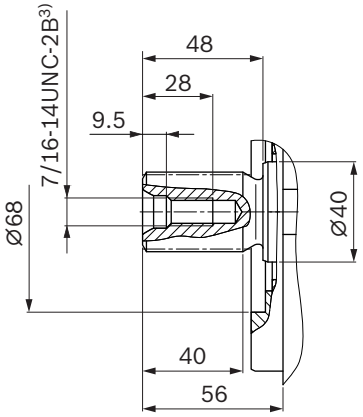

1) Center bore according to DIN 332 (thread according to DIN 13)
2) Involute spline according to ANSI B92.1a, 30° pressure angle, flat root, side fit, tolerance class 5
3) Thread according to ASME B1.1

Ports			Standard	Size	p_{max} [bar][4]	State[11]
A, B	Working port Fastening thread		SAEJ518[5] DIN 13	3/4 in M10 × 1.5; 17 deep	450	O
S	Suction port		DIN 3852[8]	M33 × 2; 18 deep	5	O[6]
$\mathbf{T}_1$	Drain port		DIN 3852[8]	M22 × 1.5; 14 deep	3	O[7]
$\mathbf{T}_2$	Drain port		DIN 3852[8]	M22 × 1.5; 14 deep	3	X[7]
R	Air bleed port		DIN 3852[8]	M12 × 1.5; 12 deep	3	X
$\mathbf{X}_1$, $\mathbf{X}_2$	Control pressure port (upstream of orifice)		DIN 3852[8]	M12 × 1.5; 12 deep	40	X
$\mathbf{X}_1$, $\mathbf{X}_2$	Control pressure port (upstream of orifice, DG only)		DIN 3852[8]	M12 × 1.5; 12 deep	40	O
$\mathbf{X}_3$, $\mathbf{X}_4$[9]	Stroking chamber pressure port		DIN 3852[8]	M12 × 1.5; 12 deep	40	X
G	Boost pressure port inlet	Working port A/B top and bottom	DIN 3852[8]	M14 × 1.5; 12 deep	40	X
		Working port A/B lateral	DIN 3852[8]	M12 × 1.5; 12 deep	40	X
$\mathbf{P}_S$	Pilot pressure port		DIN 3852[8]	M14 × 1.5; 12 deep	40	X
$\mathbf{P}_S$	Pilot pressure port (DA..7 only)		DIN 3852[8]	M14 × 1.5; 12 deep	40	O
Y	Pilot pressure port outlet (only DA..7)		DIN 3852[8]	M14 × 1.5; 12 deep	40	O
$\mathbf{M}_A$, $\mathbf{M}_B$	Measuring port pressure A, B		DIN 3852[8]	M12 × 1.5; 12 deep	450	X
$\mathbf{M}_H$	Measuring port, high pressure		DIN 3852[8]	M12 × 1.5; 12 deep	450	X
$\mathbf{F}_a$	Boost pressure port inlet		DIN 3852[8]	M18 × 1.5; 12 deep	40	X
$\mathbf{F}_{a1}$[10]	Boost pressure port inlet (attachment filter)		DIN 3852[8]	M18 × 1.5; 12 deep	40	X
$\mathbf{F}_e$[10]	Boost pressure port outlet		DIN 3852[8]	M18 × 1.5; 12 deep	40	X
$\mathbf{F}_S$[10]	Line from filter to suction port (cold start)		DIN 3852[8]	M18 × 1.5; 12 deep	40	X
$\mathbf{Y}_1$, $\mathbf{Y}_2$	Pilot pressure port (pilot signal HD only)		DIN 3852[8]	M14 × 1.5; 12 deep	40	O
Z	Pilot pressure port (inch signal only DA..8)		DIN 3852[8]	M10 × 1; 8 deep	80	X

4) Depending on the application, momentary pressure peaks can occur. Keep this in mind when selecting measuring devices and fittings.
5) Only dimensions according to SAE J518, metric fastening thread is a deviation from the standard.
6) Plugged for external boost pressure supply.
7) Depending on installation position, $\mathbf{T}_1$ or $\mathbf{T}_2$ must be connected (see also installation instructions on page 97).
8) The countersink can be deeper than specified in the standard. Ports designed for straight stud ends according to EN ISO 9974-2 type E
9) Optional, see page 87
10) The diameter of the countersink deviates from the standard. (For details, see page 90, dimensions of the countersinks)
11) O = Must be connected (plugged on delivery)
X = Plugged (in normal operation)

▼ **HD** – Proportional control, hydraulic, pilot-pressure related

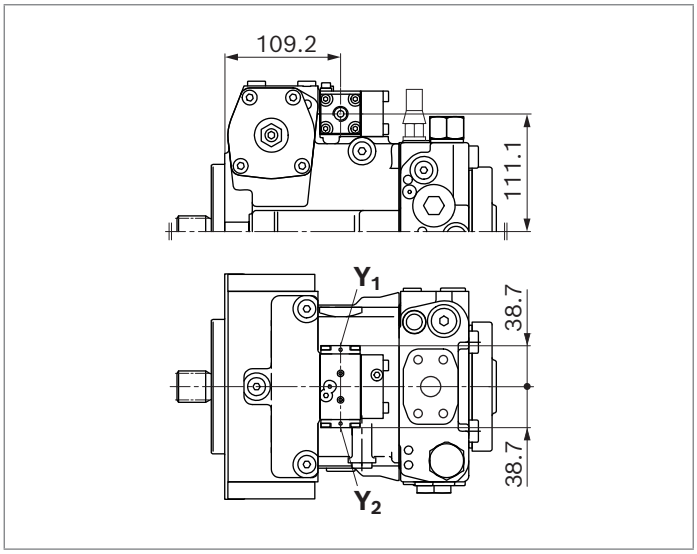

▼ **HW** – Proportional control, hydraulic, mechanical servo

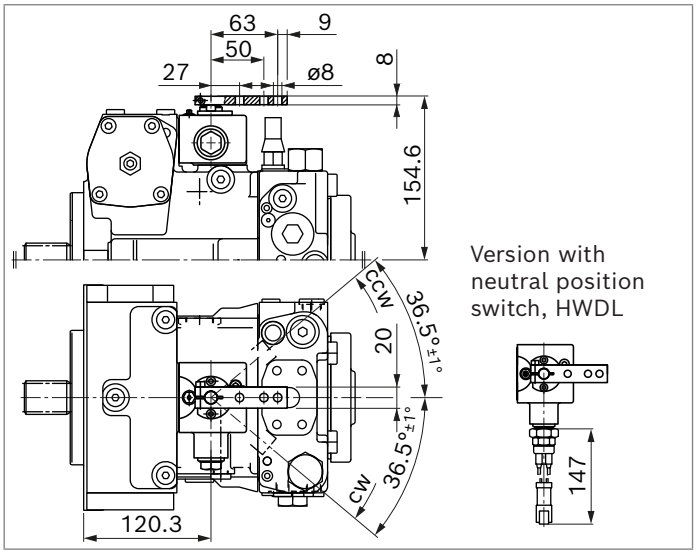

▼ **EP** – Proportional control, electric

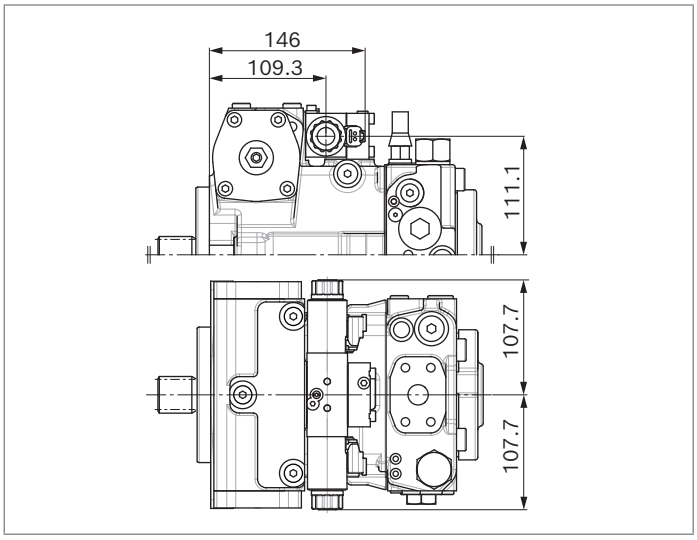

▼ **EZ** – Two-point control, electric

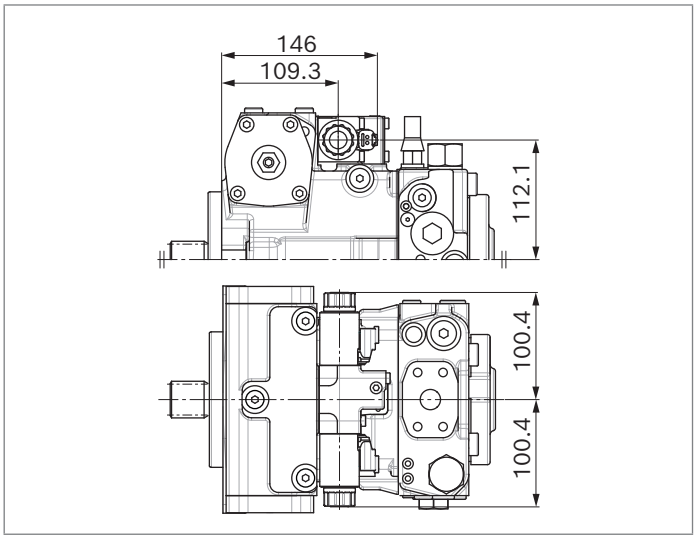

▼ **DG** – Hydraulic control, direct operated

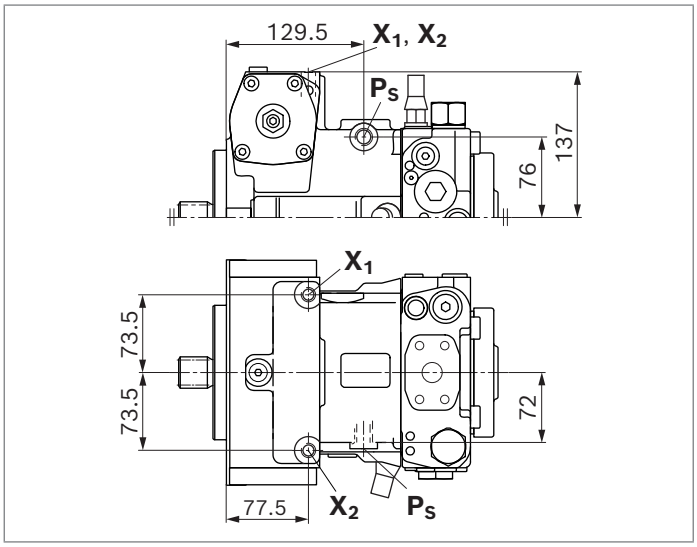

DA control valve

▼ **DA..2** – Fixed setting

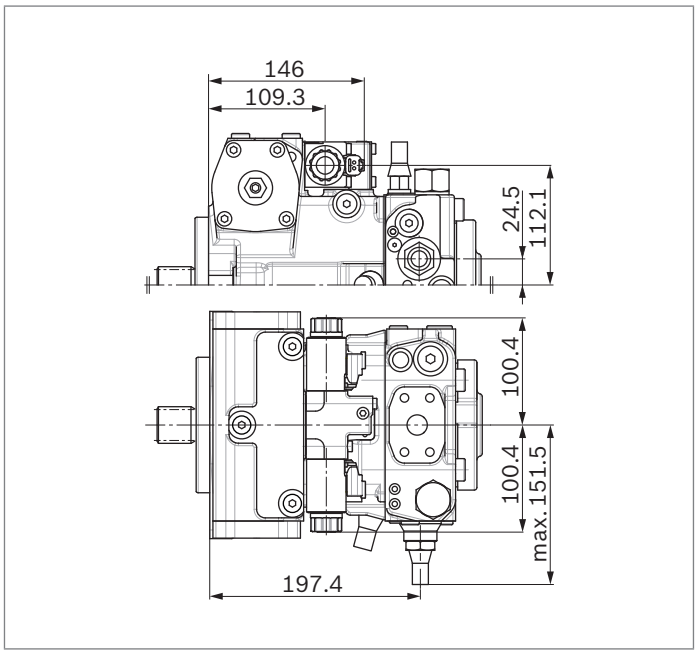

▼ **DA..3** – Mechanically adjustable with position lever

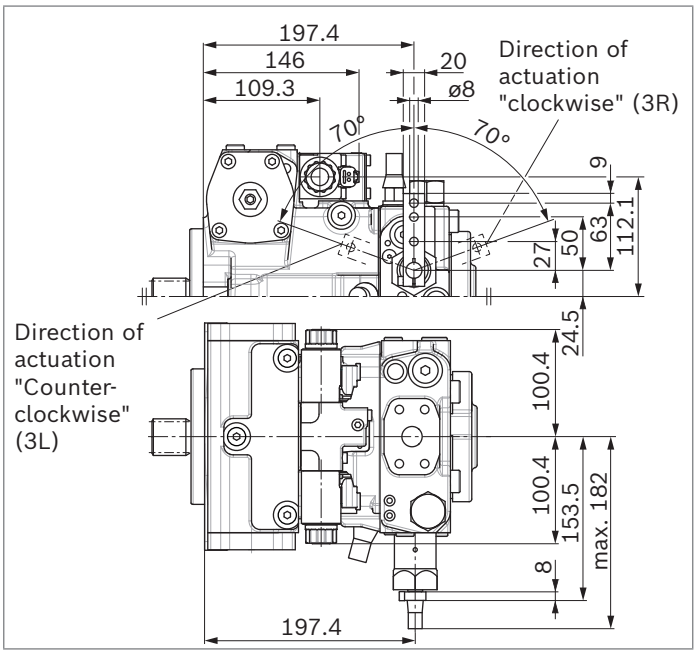

▼ **DA..7** – Fixed setting and ports for pilot control device

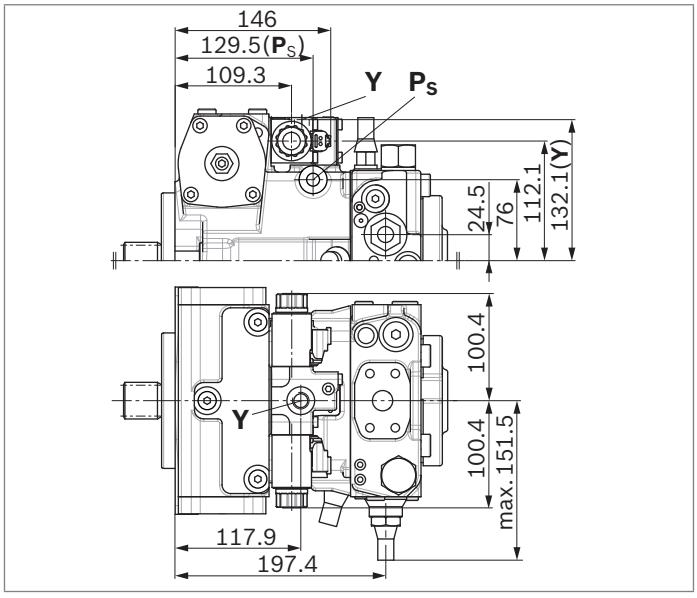

▼ **DA..8** – Fixed setting and inch valve mounted

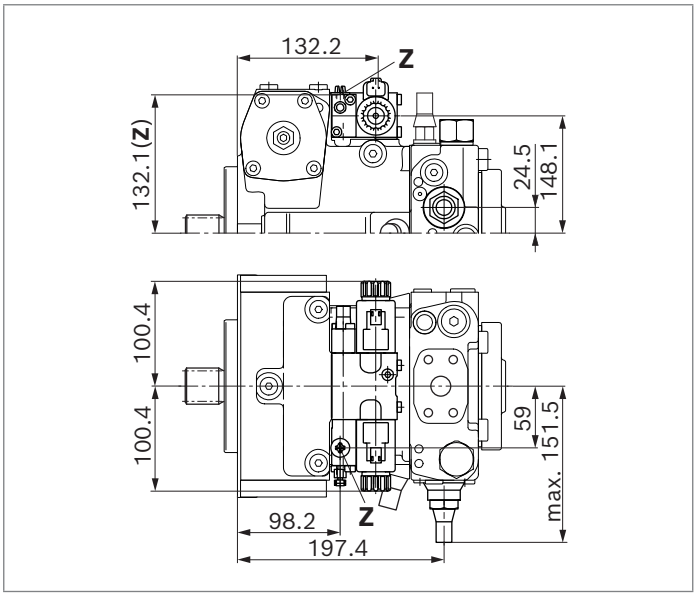

Dimensions, size 71

Version without control module

Standard: SAE working port **A** and **B** top and bottom, suction port **S** bottom (02)

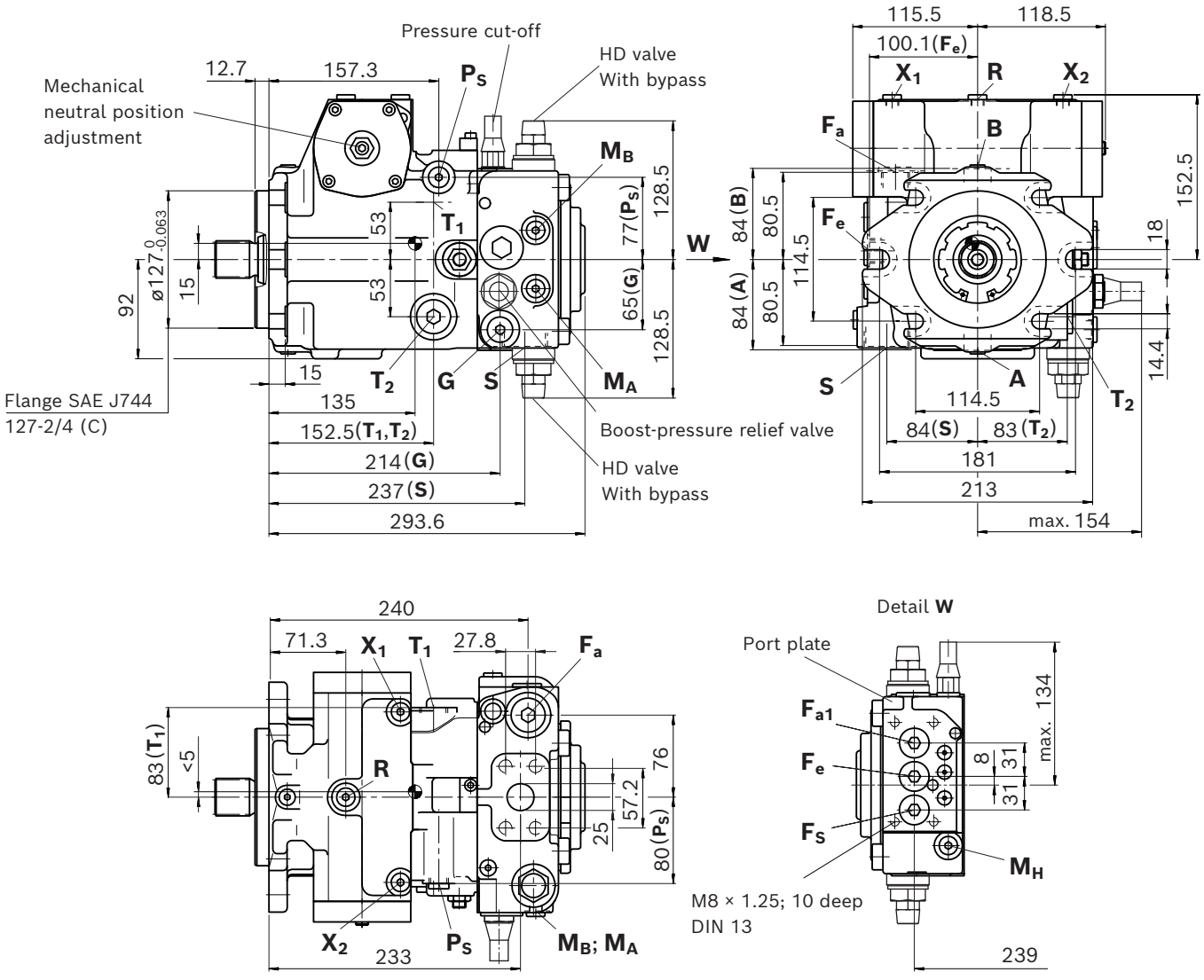

Center of gravity

Notice

Option: SAE working port **A** and **B** top and bottom, suction port **S** top (03). Port plate (02) rotated through 180°, installation drawing on request

Version without control module

Standard: SAE working port **A** and **B**, same side left, suction port **S** bottom (10)

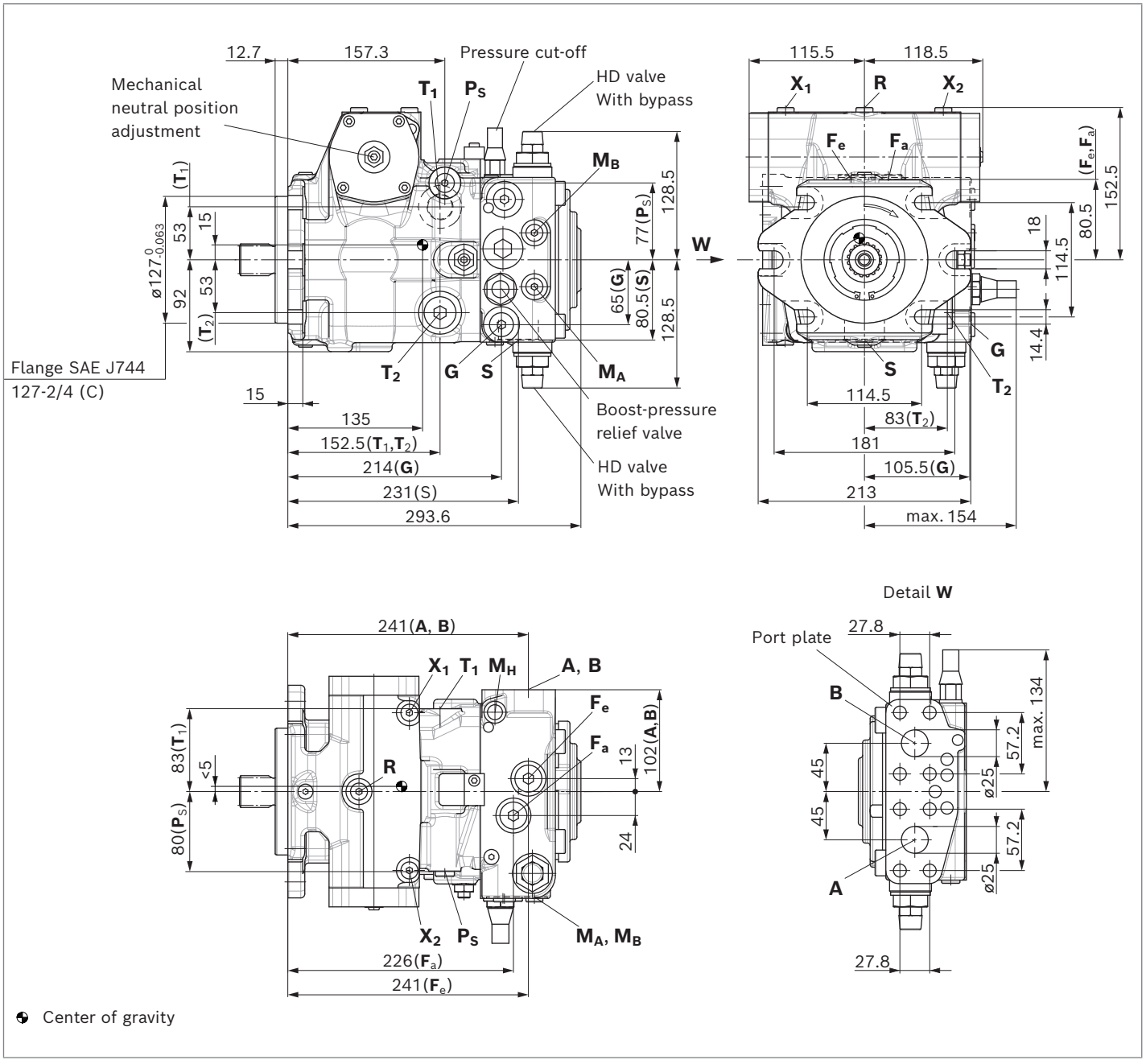

Notice

Option: SAE working port **A** and **B**, same side right, suction port **S** top (13), installation drawing on request

▼ **Splined shaft DIN 5480**

Z – W35×2×16×9g

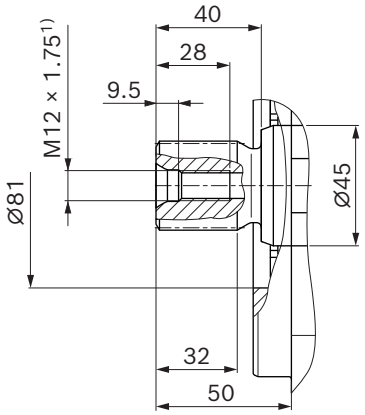

▼ **Splined shaft DIN 5480**

A – W40×2×18×9g

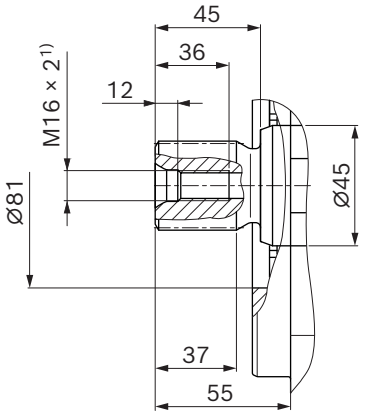

▼ **Splined shaft ANSI B92.1a**

S – 1 1/4 in 14T 12/24DP[2)]

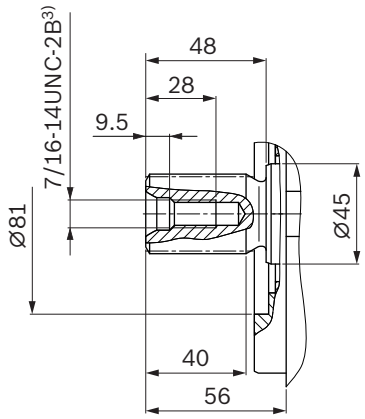

▼ **Splined shaft ANSI B92.1a**

T – 1 3/8 in 21T 16/32DP[2)]

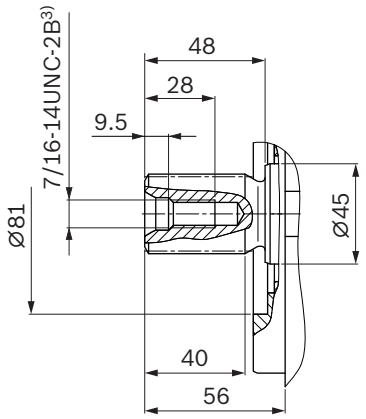

1) Center bore according to DIN 332 (thread according to DIN 13)
2) Involute spline according to ANSI B92.1a, 30° pressure angle, flat root, side fit, tolerance class 5
3) Thread according to ASME B1.1

Ports		Standard	Size	p_{max} [bar][4]	State[11]
A, B	Working port Fastening thread	SAEJ518[5] DIN 13	1 in M12 × 1.75; 17 deep	450	O
S	Suction port	DIN 3852[8]	M42 × 2; 20 deep	5	O[6]
$\mathbf{T}_1$	Drain port	DIN 3852[8]	M26 × 1.5; 16 deep	3	O[7]
$\mathbf{T}_2$	Drain port	DIN 3852[8]	M26 × 1.5; 16 deep	3	X[7]
R	Air bleed port	DIN 3852[8]	M12 × 1.5; 12 deep	3	X
$\mathbf{X}_1$, $\mathbf{X}_2$	Control pressure port (upstream of orifice)	DIN 3852[8]	M12 × 1.5; 12 deep	40	X
$\mathbf{X}_1$, $\mathbf{X}_2$	Control pressure port (upstream of orifice, DG only)	DIN 3852[8]	M12 × 1.5; 12 deep	40	O
$\mathbf{X}_3$, $\mathbf{X}_4$[9]	Stroking chamber pressure port	DIN 3852[8]	M12 × 1.5; 12 deep	40	X
G	Boost pressure port inlet	DIN 3852[8]	M18 × 1.5; 12 deep	40	X
$\mathbf{P}_S$	Pilot pressure port	DIN 3852[8]	M14 × 1.5; 12 deep	40	X
$\mathbf{P}_S$	Pilot pressure port (DA..7 only)	DIN 3852[8]	M14 × 1.5; 12 deep	40	O
Y	Pilot pressure port outlet (only DA..7)	DIN 3852[8]	M14 × 1.5; 12 deep	40	O
$\mathbf{M}_A$, $\mathbf{M}_B$	Measuring port pressure A, B	DIN 3852[8]	M12 × 1.5; 12 deep	450	X
$\mathbf{M}_H$	Measuring port, high pressure	DIN 3852[8]	M12 × 1.5; 12 deep	450	X
$\mathbf{F}_a$	Boost pressure port inlet	DIN 3852[8]	M26 × 1.5; 16 deep	40	X
$\mathbf{F}_{a1}$[10]	Boost pressure port inlet (attachment filter)	DIN 3852[8]	M22 × 1.5; 14 deep	40	X
$\mathbf{F}_e$[10]	Boost pressure port outlet	DIN 3852[8]	M22 × 1.5; 14 deep	40	X
$\mathbf{F}_S$[10]	Line from filter to suction port (cold start)	DIN 3852[8]	M22 × 1.5; 14 deep	40	X
$\mathbf{Y}_1$, $\mathbf{Y}_2$	Pilot pressure port (pilot signal HD only)	DIN 3852[8]	M14 × 1.5; 8 deep	40	O
Z	Pilot pressure port (inch signal only DA..8)	DIN 3852[8]	M10 × 1; 12 deep	80	X

4) Depending on the application, momentary pressure peaks can occur. Keep this in mind when selecting measuring devices and fittings.
5) Only dimensions according to SAE J518, metric fastening thread is a deviation from the standard.
6) Plugged for external boost pressure supply.
7) Depending on installation position, $\mathbf{T}_1$ or $\mathbf{T}_2$ must be connected (see also installation instructions on page 97).
8) The countersink can be deeper than specified in the standard. Ports designed for straight stud ends according to EN ISO 9974-2 type E
9) Optional, see page 87
10) The diameter of the countersink deviates from the standard. (For details, see page 90, dimensions of the countersinks)
11) O = Must be connected (plugged on delivery)
X = Plugged (in normal operation)

▼ **HD** – Proportional control, hydraulic, pilot-pressure related

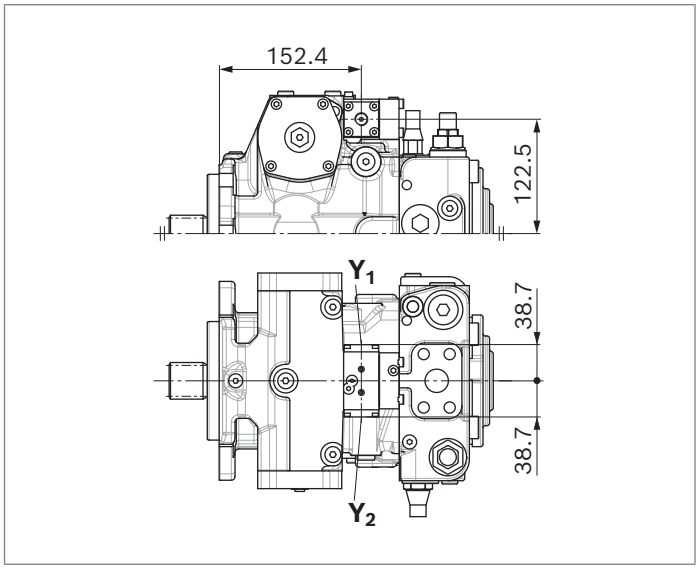

▼ **HW** – Proportional control, hydraulic, mechanical servo

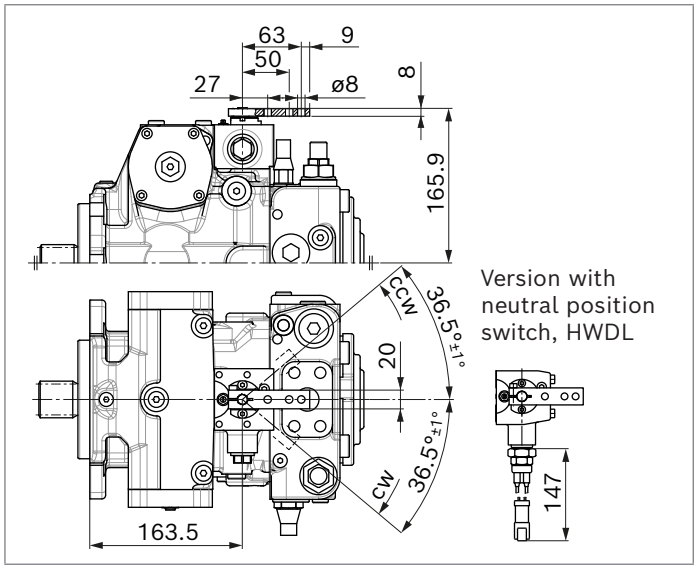

▼ **EP** – Proportional control, electric

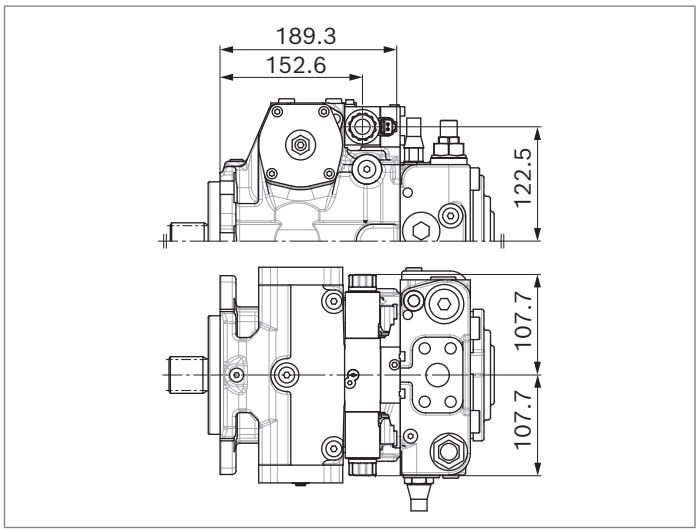

▼ **EZ** – Two-point control, electric

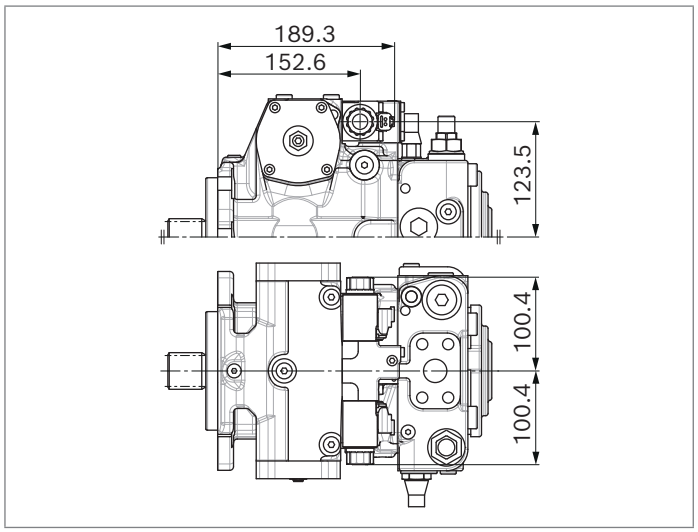

▼ **DG** – Hydraulic control, direct operated

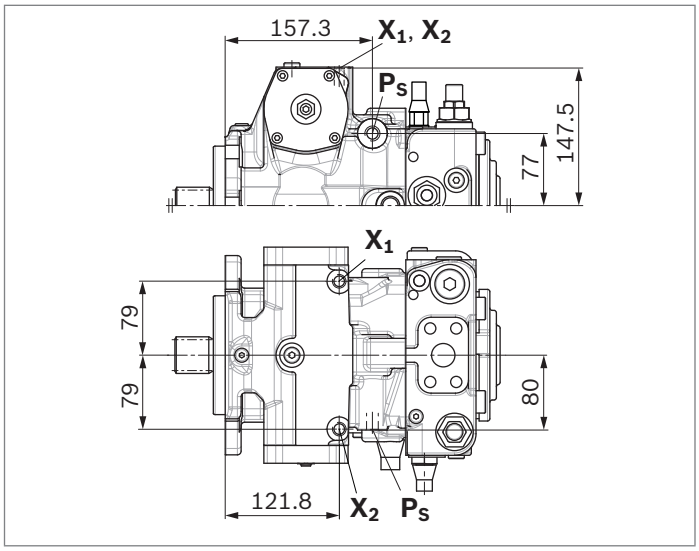

DA control valve

▼ **DA..2** – Fixed setting

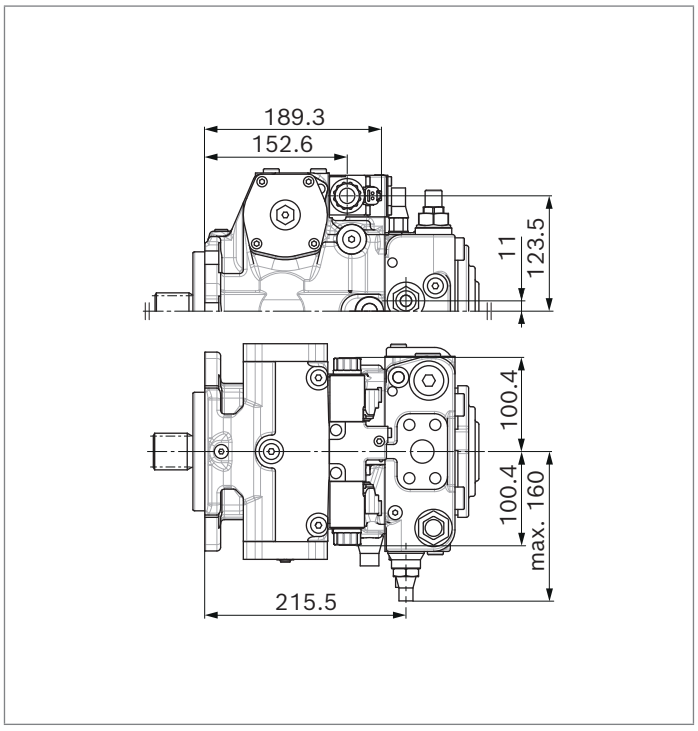

▼ **DA..3** – Mechanically adjustable with position lever

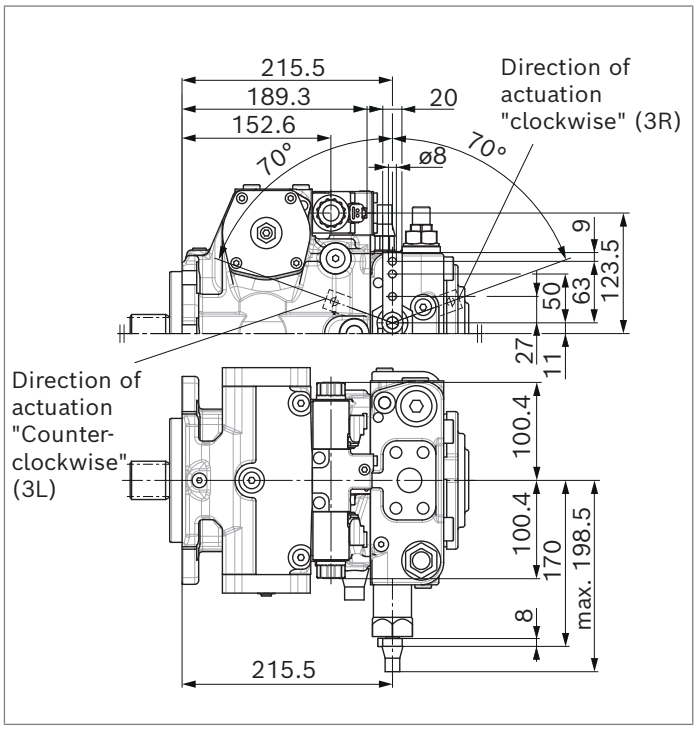

▼ **DA..7** – Fixed setting and ports for pilot control device

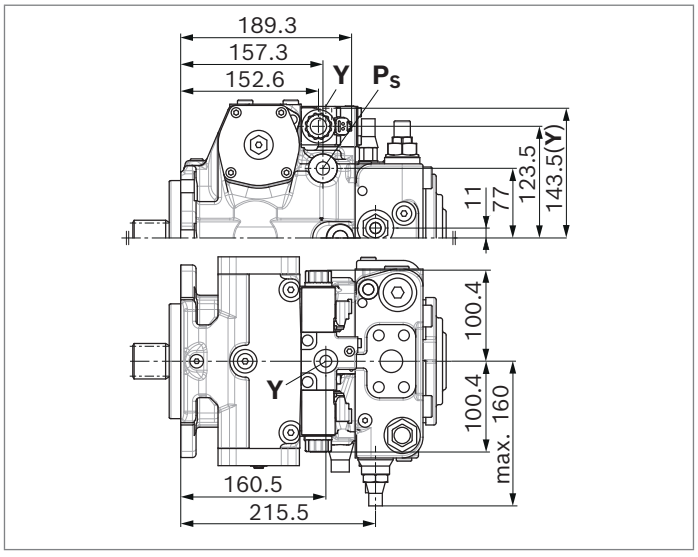

▼ **DA..8** – Fixed setting and inch valve mounted

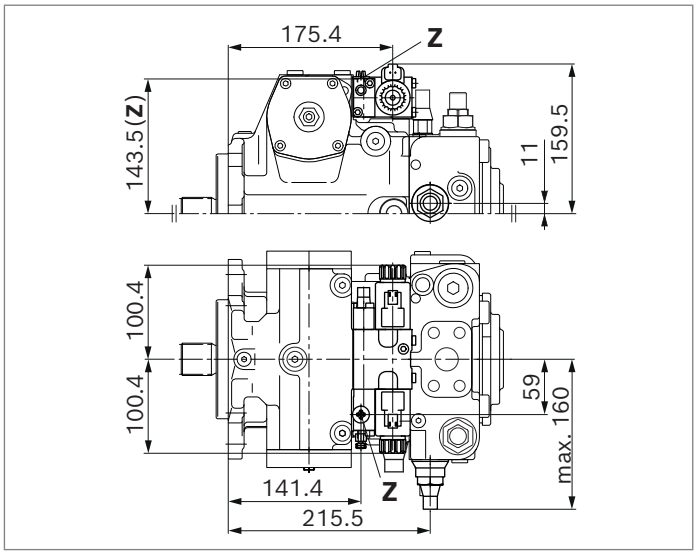

Dimensions, size 90

Version without control module

Standard: SAE working port **A** and **B** top and bottom, suction port **S** bottom (02)

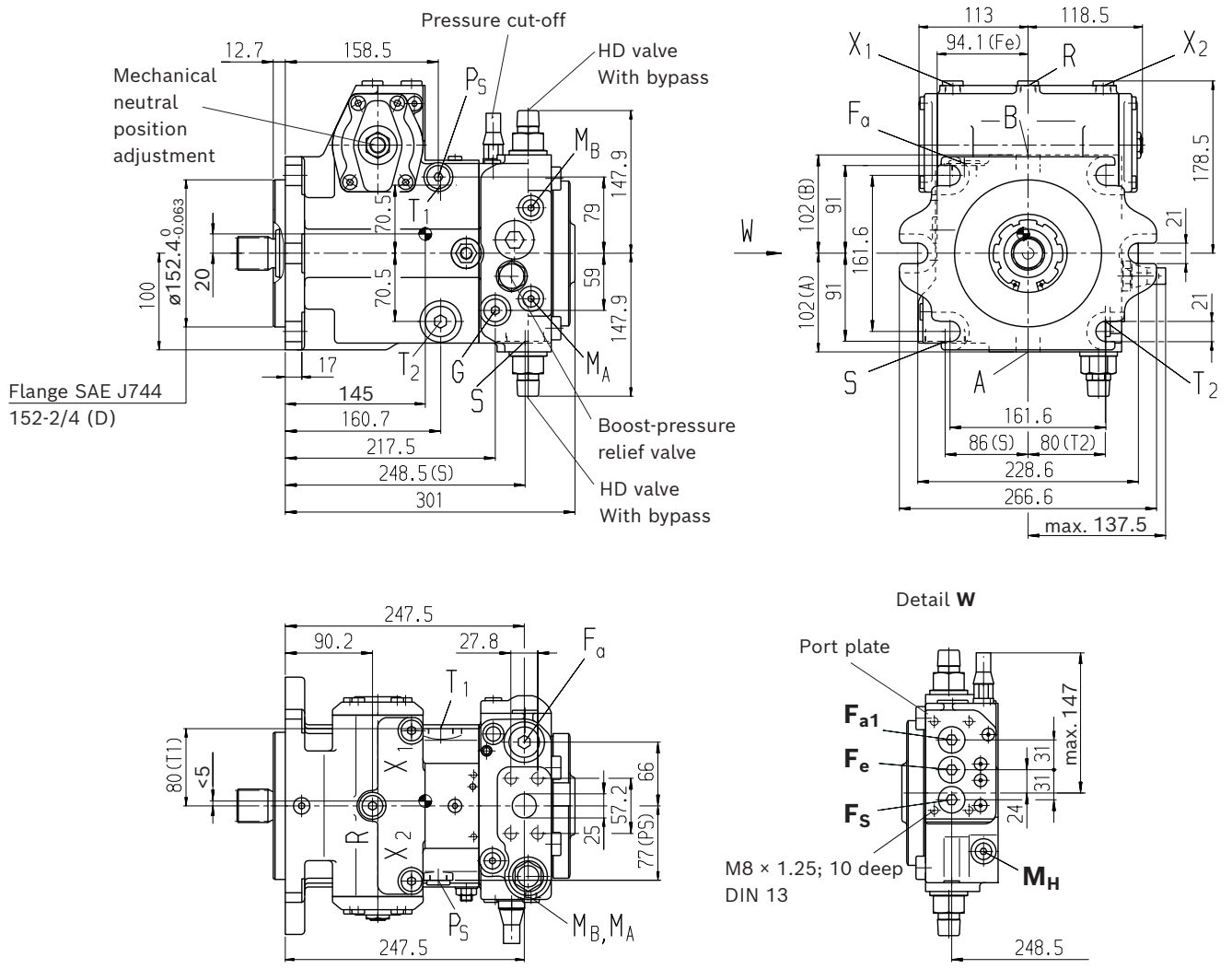

Center of gravity

Notice

Option: SAE working port **A** and **B** top and bottom, suction port **S** top (03). Port plate (02) rotated through 180°, installation drawing on request

▼ **Splined shaft DIN 5480**

Z – W35×2×16×9g

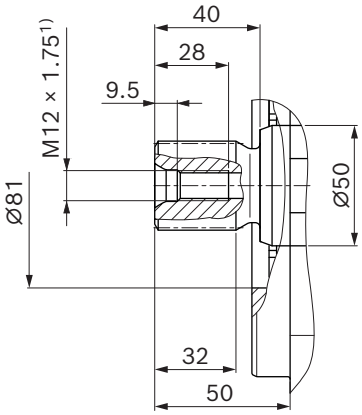

▼ **Splined shaft DIN 5480**

A – W45×2×21×9g

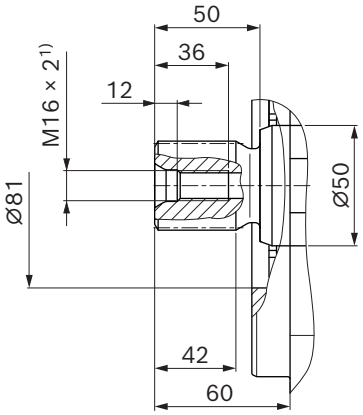

▼ **Splined shaft ANSI B92.1a**

S – 1 3/4 in 13T 8/16DP[2)]

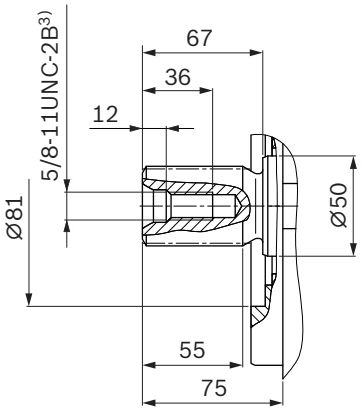

▼ **Splined shaft ANSI B92.1a**

U – 1 1/4 in 14T 12/24DP[2)]

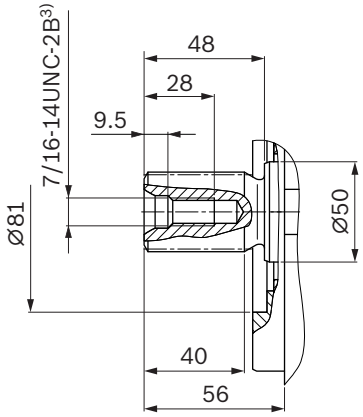

1) Center bore according to DIN 332 (thread according to DIN 13)
2) Involute spline according to ANSI B92.1a, 30° pressure angle, flat root, side fit, tolerance class 5
3) Thread according to ASME B1.1

Ports		Standard	Size	p_{max} [bar][4]	State[11]
A, B	Working port Fastening thread	SAEJ518[5] DIN 13	1 in M12 × 1.75; 17 deep	450	O
S	Suction port	DIN 3852[8]	M42 × 2; 20 deep	5	O[6]
$\mathbf{T}_1$	Drain port	DIN 3852[8]	M26 × 1.5; 16 deep	3	O[7]
$\mathbf{T}_2$	Drain port	DIN 3852[8]	M26 × 1.5; 16 deep	3	X[7]
R	Air bleed port	DIN 3852[8]	M16 × 1.5; 12 deep	3	X
$\mathbf{X}_1$, $\mathbf{X}_2$	Control pressure port (upstream of orifice)	DIN 3852[8]	M16 × 1.5; 12 deep	40	X
$\mathbf{X}_1$, $\mathbf{X}_2$	Control pressure port (upstream of orifice, DG only)	DIN 3852[8]	M16 × 1.5; 12 deep	40	O
$\mathbf{X}_3$, $\mathbf{X}_4$[9]	Stroking chamber pressure port	DIN 3852[8]	M12 × 1.5; 12 deep	40	X
G	Boost pressure port inlet	DIN 3852[8]	M18 × 1.5; 12 deep	40	X
$\mathbf{P}_S$	Pilot pressure port	DIN 3852[8]	M18 × 1.5; 12 deep	40	X
$\mathbf{P}_S$	Pilot pressure port (DA..7 only)	DIN 3852[8]	M18 × 1.5; 12 deep	40	O
Y	Pilot pressure port outlet (only DA..7)	DIN 3852[8]	M18 × 1.5; 12 deep	40	O
$\mathbf{M}_A$, $\mathbf{M}_B$	Measuring port pressure A, B	DIN 3852[8]	M12 × 1.5; 12 deep	450	X
$\mathbf{M}_H$	Measuring port, high pressure	DIN 3852[8]	M12 × 1.5; 12 deep	450	X
$\mathbf{F}_a$	Boost pressure port inlet	DIN 3852[8]	M26 × 1.5; 16 deep	40	X
$\mathbf{F}_{a1}$[10]	Boost pressure port inlet (attachment filter)	DIN 3852[8]	M22 × 1.5; 14 deep	40	X
$\mathbf{F}_e$[10]	Boost pressure port outlet	DIN 3852[8]	M22 × 1.5; 14 deep	40	X
$\mathbf{F}_S$[10]	Line from filter to suction port (cold start)	DIN 3852[8]	M22 × 1.5; 14 deep	40	X
$\mathbf{Y}_1$, $\mathbf{Y}_2$	Pilot pressure port (pilot signal HD only)	DIN 3852[8]	M14 × 1.5; 12 deep	40	O
Z	Pilot pressure port (inch signal only DA..8)	DIN 3852[8]	M10 × 1; 8 deep	80	X

4) Depending on the application, momentary pressure peaks can occur. Keep this in mind when selecting measuring devices and fittings.
5) Only dimensions according to SAE J518, metric fastening thread is a deviation from the standard.
6) Plugged for external boost pressure supply.
7) Depending on installation position, $\mathbf{T}_1$ or $\mathbf{T}_2$ must be connected (see also installation instructions on page 97).
8) The countersink can be deeper than specified in the standard. Ports designed for straight stud ends according to EN ISO 9974-2 type E
9) Optional, see page 87
10) The diameter of the countersink deviates from the standard. (For details, see page 90, dimensions of the countersinks)
11) O = Must be connected (plugged on delivery)
X = Plugged (in normal operation)

▼ **HD** – Proportional control, hydraulic, pilot-pressure related

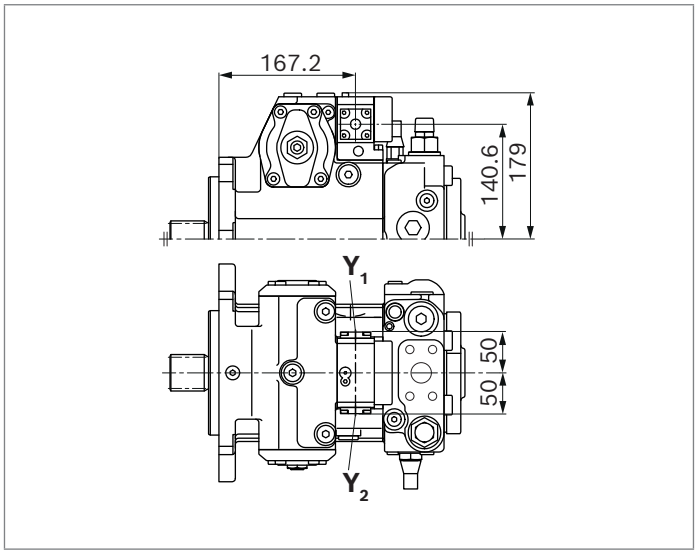

▼ **HW** – Proportional control, hydraulic, mechanical servo

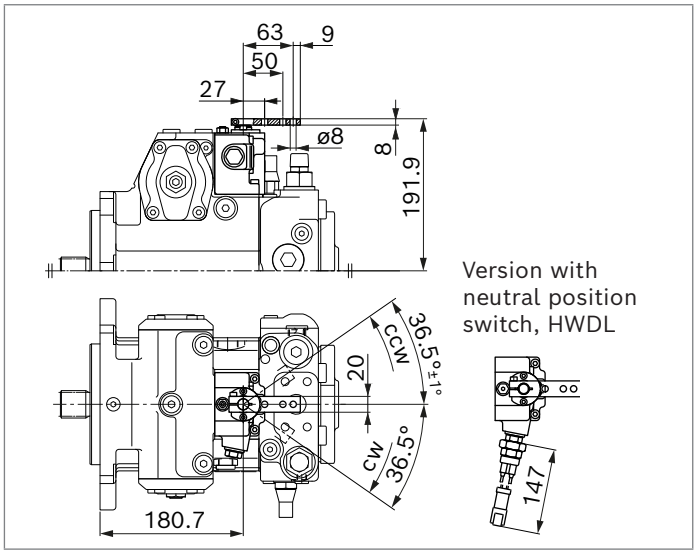

▼ **EP** – Proportional control, electric

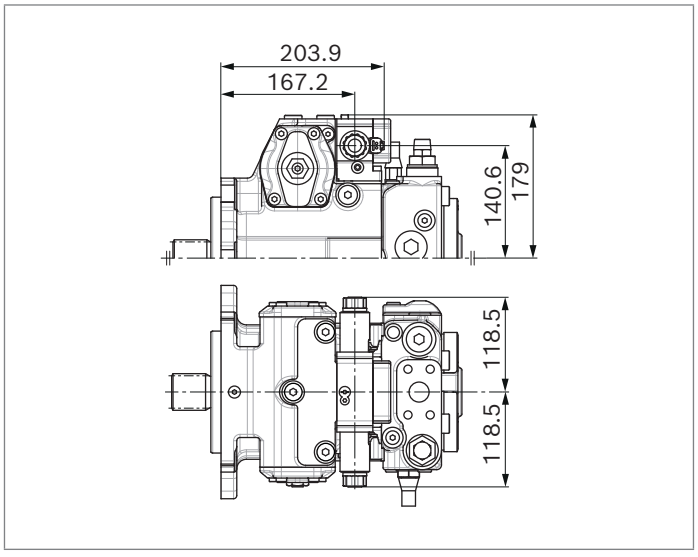

▼ **EZ** – Two-point control, electric

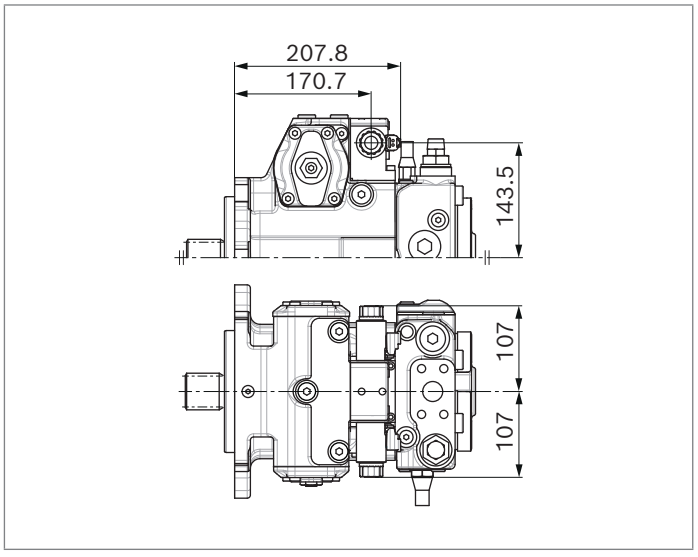

▼ **DG** – Hydraulic control, direct operated

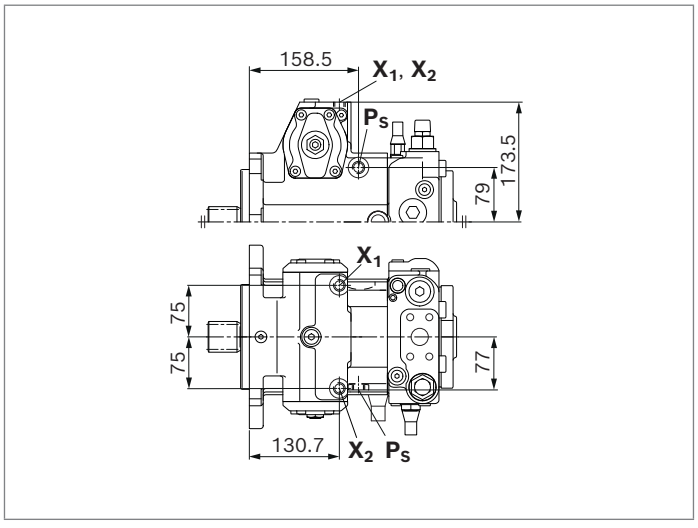

DA control valve

▼ **DA..2** – Fixed setting

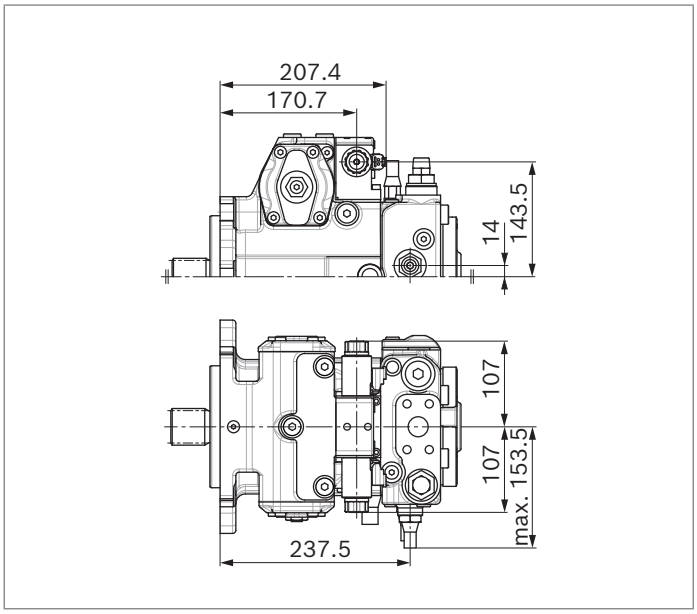

▼ **DA..3** – Mechanically adjustable with position lever

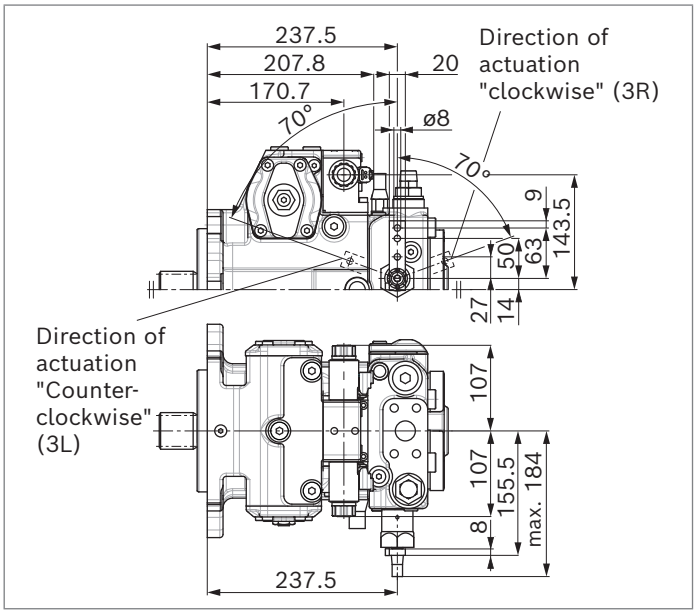

▼ **DA..7** – Fixed setting and ports for pilot control device

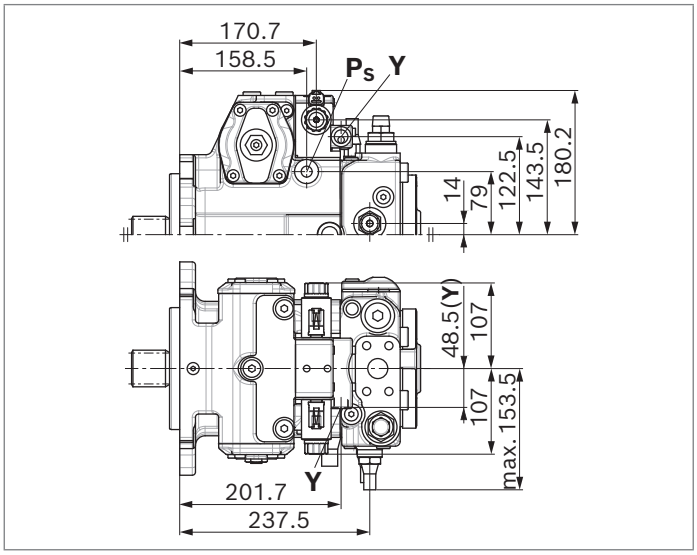

▼ **DA..8** – Fixed setting and inch valve mounted

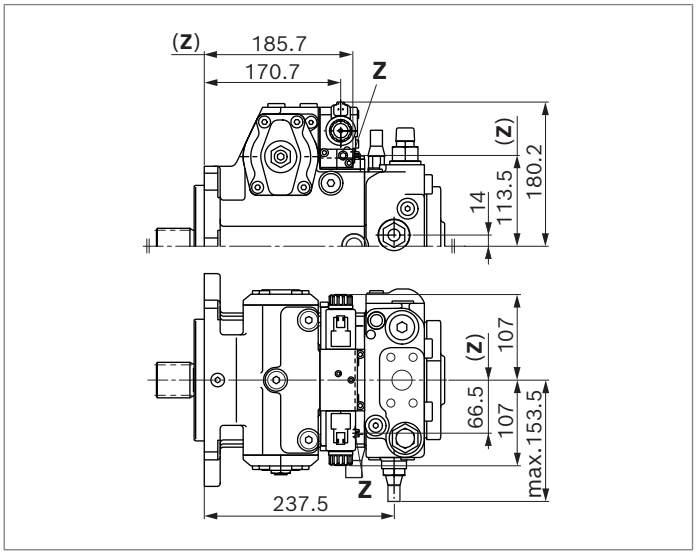

Dimensions, size 125

Version without control module

Standard: SAE working port **A** and **B** top and bottom, suction port **S** bottom (02)

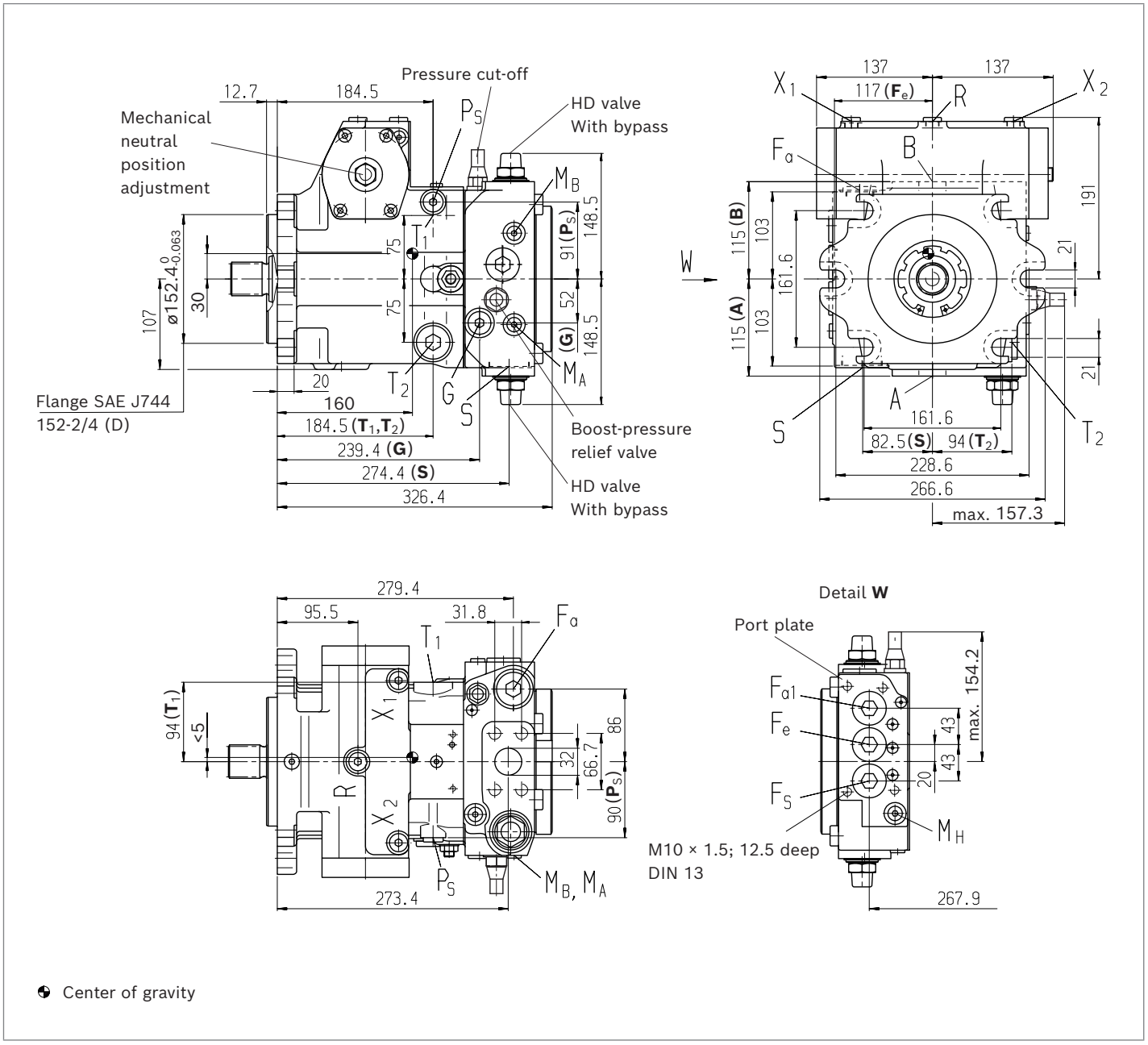

Notice

Option: SAE working port **A** and **B** top and bottom, suction port **S** top (03). Port plate (02) rotated through 180°, installation drawing on request

Version without control module

Standard: SAE working port **A** and **B**, same side left, suction port **S** bottom (10)

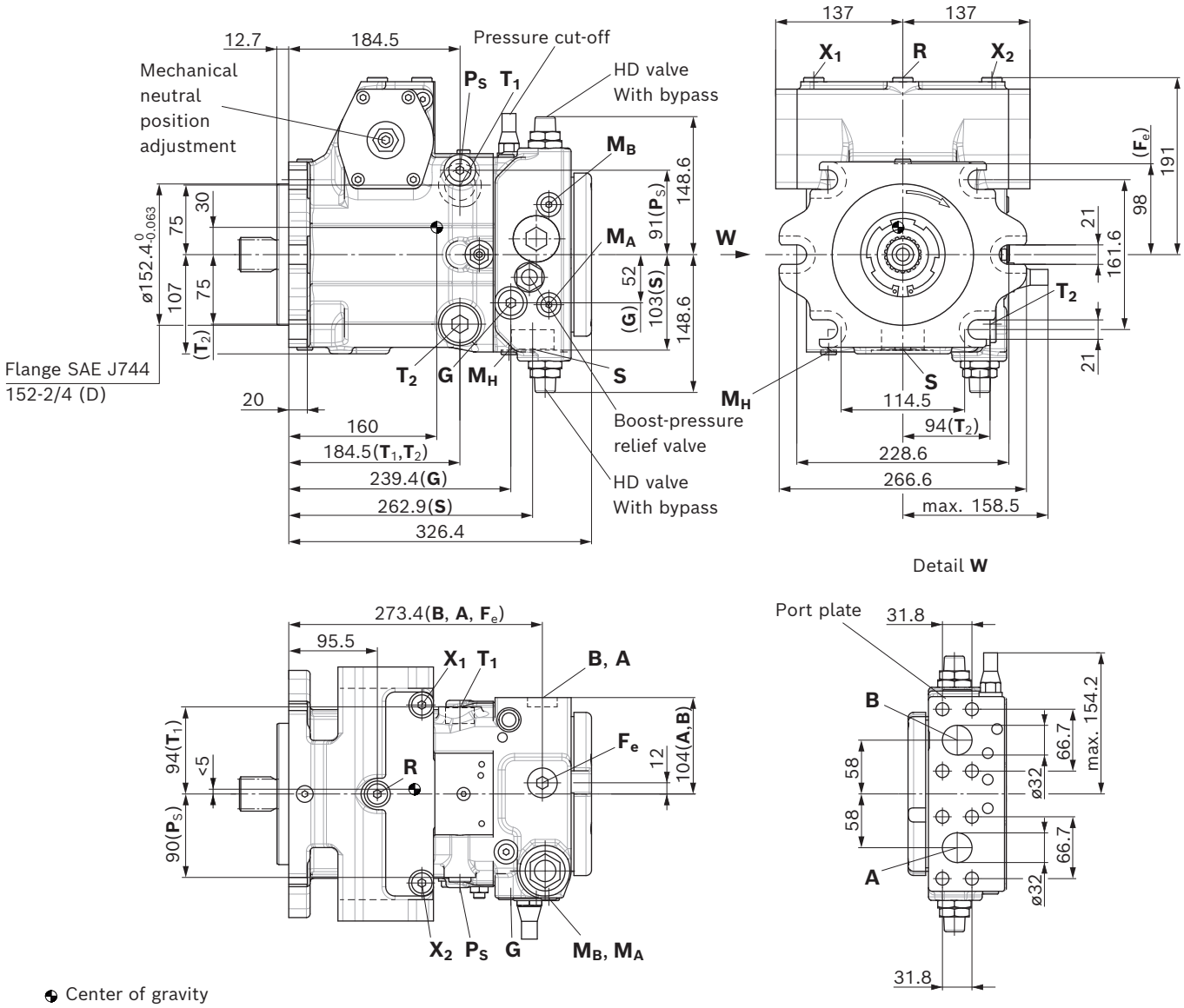

Notice

Option: SAE working port **A** and **B**, same side right, suction port **S** top (13), installation drawing on request

▼ **Splined shaft DIN 5480**

Z – W40×2×18×9g

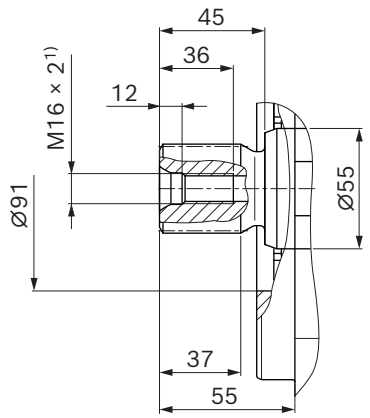

▼ **Splined shaft DIN 5480**

A – W45×2×21×9g

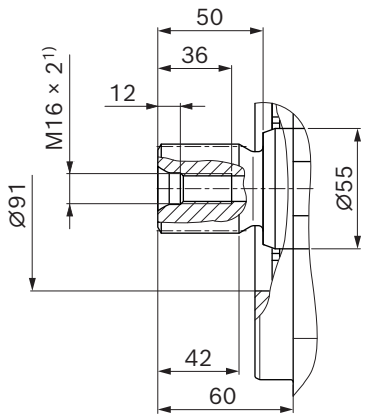

▼ **Splined shaft ANSI B92.1a**

S – 1 3/4 in 13T 8/16DP[2)]

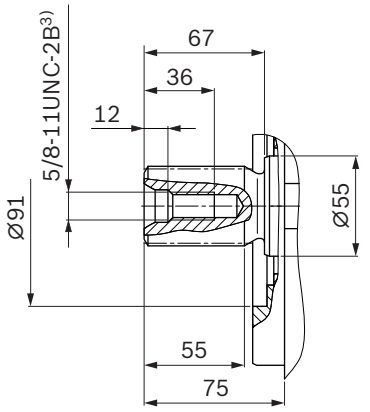

▼ **Splined shaft ANSI B92.1a**

T – 2 in 15T 8/16DP[2)]

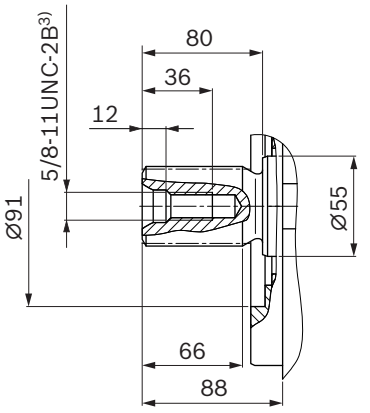

1) Center bore according to DIN 332 (thread according to DIN 13)
2) Involute spline according to ANSI B92.1a, 30° pressure angle, flat root, side fit, tolerance class 5
3) Thread according to ASME B1.1

▼ **Connection table for port plate 02, 03, 10 and 13**

Ports		Standard	Size	p_{max} [bar][4]	State[12]
A, B	Working port Fastening thread	SAEJ518[5] DIN 13	1 1/4 in M14 × 2; 19 deep	450	O
S	Suction port	DIN 3852[8]	M48 × 2; 22 deep	5	O[6]
$\mathbf{T}_1$	Drain port	DIN 3852[8]	M33 × 2; 18 deep	3	O[7]
$\mathbf{T}_2$	Drain port	DIN 3852[8]	M33 × 2; 18 deep	3	X[7]
R	Air bleed port	DIN 3852[8]	M16 × 1.5; 12 deep	3	X
$\mathbf{X}_1$, $\mathbf{X}_2$	Control pressure port (upstream of orifice)	DIN 3852[8]	M16 × 1.5; 12 deep	40	X
$\mathbf{X}_1$, $\mathbf{X}_2$	Control pressure port (upstream of orifice, DG only)	DIN 3852[8]	M16 × 1.5; 12 deep	40	O
$\mathbf{X}_3$, $\mathbf{X}_4$[9]	Stroking chamber pressure port	DIN 3852[8]	M12 × 1.5; 12 deep	40	X
G	Boost pressure port inlet	DIN 3852[8]	M22 × 1.5; 14 deep	40	X
$\mathbf{P}_S$	Pilot pressure port	DIN 3852[8]	M18 × 1.5; 12 deep	40	X
$\mathbf{P}_S$	Pilot pressure port (DA..7 only)	DIN 3852[8]	M18 × 1.5; 12 deep	40	O
Y	Pilot pressure port outlet (only DA..7)	DIN 3852[8]	M18 × 1.5; 12 deep	40	O
$\mathbf{M}_A$, $\mathbf{M}_B$	Measuring port pressure A, B	DIN 3852[8]	M12 × 1.5; 12 deep	450	X
$\mathbf{M}_H$	Measuring port, high pressure	DIN 3852[8]	M12 × 1.5; 12 deep	450	X
$\mathbf{F}_a$	Boost pressure port inlet	DIN 3852[8]	M33 × 2; 18 deep	40	X
$\mathbf{F}_{a1}$[10]	Boost pressure port inlet (attachment filter)	DIN 3852[8]	M33 × 2; 18 deep	40	X
$\mathbf{F}_e$[10]	Boost pressure port outlet	DIN 3852[8]	M33 × 2; 18 deep	40	X
$\mathbf{F}_S$[10]	Line from filter to suction port (cold start)	DIN 3852[8]	M33 × 2; 18 deep	40	X
$\mathbf{Y}_1$, $\mathbf{Y}_2$	Pilot pressure port (pilot signal HD only)	DIN 3852[8]	M14 × 1.5; 12 deep	40	O
Z	Pilot pressure port (inch signal only DA..8)	DIN 3852[8]	M10 × 1; 8 deep	80	X

▼ **Connection table for port plate 22**

Ports		Standard	Size	p_{max} [bar][4]	State[12]
A, B	Working port Fastening thread	SAEJ518[5] DIN 13	1 1/4 in M14 × 2; 19 deep	450	O
S	Suction port	ISO 6149[11]	M48 × 2; 22 deep	5	O[6]
$\mathbf{T}_1$	Drain port	ISO 6149[11]	M33 × 2; 19 deep	3	O[7]
$\mathbf{T}_2$	Drain port	ISO 6149[11]	M33 × 2; 19 deep	3	X[7]
R	Air bleed port	ISO 6149[11]	M14 × 1.5; 11.5 deep	3	X
$\mathbf{X}_1$, $\mathbf{X}_2$	Control pressure port (upstream of orifice)	ISO 6149[11]	M14 × 1.5; 11.5 deep	40	X
G	Boost pressure port inlet	ISO 6149[11]	M22 × 1.5; 15.5 deep	40	X
$\mathbf{P}_S$	Pilot pressure port	ISO 6149[11]	M18 × 1.5; 14.5 deep	40	X
$\mathbf{M}_A$, $\mathbf{M}_B$	Measuring port pressure A, B	ISO 6149[11]	M14 × 1.5; 12 deep	450	X
$\mathbf{F}_a$	Boost pressure port inlet	ISO 6149[11]	M33 × 2; 19 deep	40	X
$\mathbf{F}_{a1}$[10]	Boost pressure port inlet (attachment filter)	DIN 3852[8]	M33 × 2; 18 deep	40	X
$\mathbf{F}_e$[10]	Boost pressure port outlet	DIN 3852[8]	M33 × 2; 18 deep	40	X
$\mathbf{F}_S$[10]	Line from filter to suction port (cold start)	DIN 3852[8]	M33 × 2; 18 deep	40	X

4) Depending on the application, momentary pressure peaks can occur. Keep this in mind when selecting measuring devices and fittings.
5) Only dimensions according to SAE J518, metric fastening thread is a deviation from the standard.
6) Plugged for external boost pressure supply.
7) Depending on installation position, $\mathbf{T}_1$ or $\mathbf{T}_2$ must be connected (see also installation instructions on page 97).
8) The countersink can be deeper than specified in the standard. Ports designed for straight stud ends according to EN ISO 9974-2 type E
9) Optional, see page 87
10) The diameter of the countersink deviates from the standard. (For details, see page 90, dimensions of the countersinks)
11) The countersink may be deeper than specified in the standard. Ports designed for straight stud ends according to EN ISO 6149-2
12) O = Must be connected (plugged on delivery)
X = Plugged (in normal operation)

▼ **HD** – Proportional control, hydraulic, pilot-pressure related

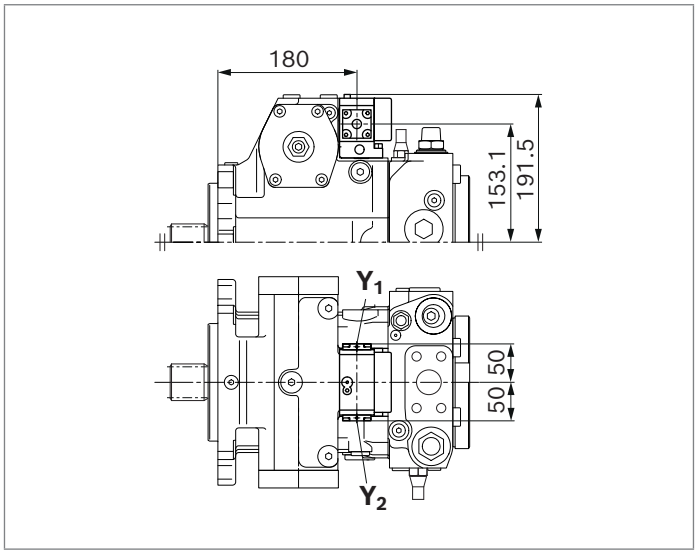

▼ **HW** – Proportional control, hydraulic, mechanical servo

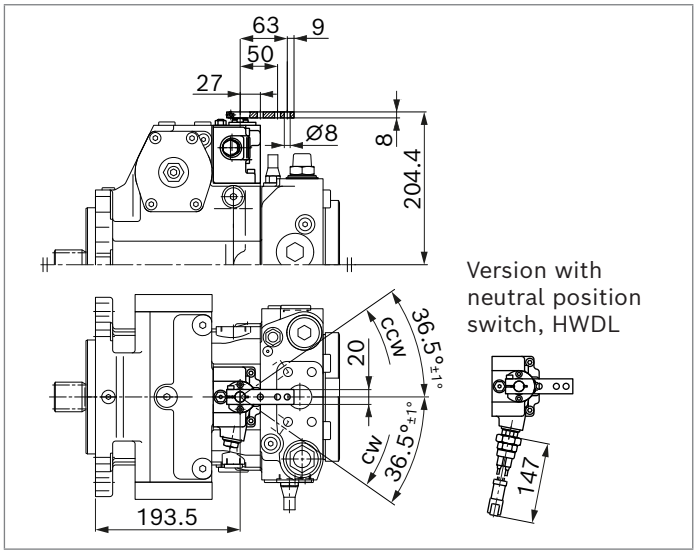

▼ **EP** – Proportional control, electric

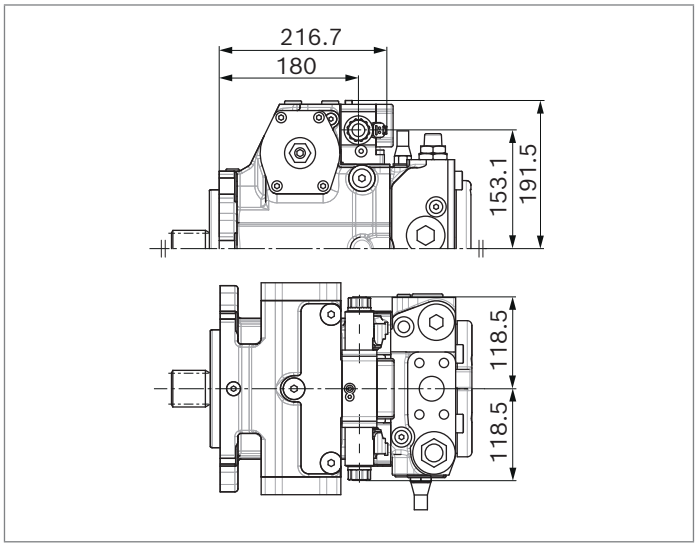

▼ **EZ** – Two-point control, electric

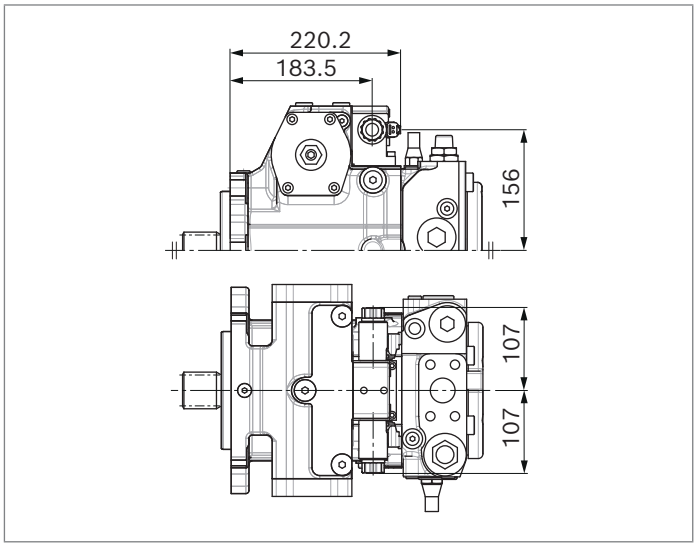

▼ **DG** – Hydraulic control, direct operated

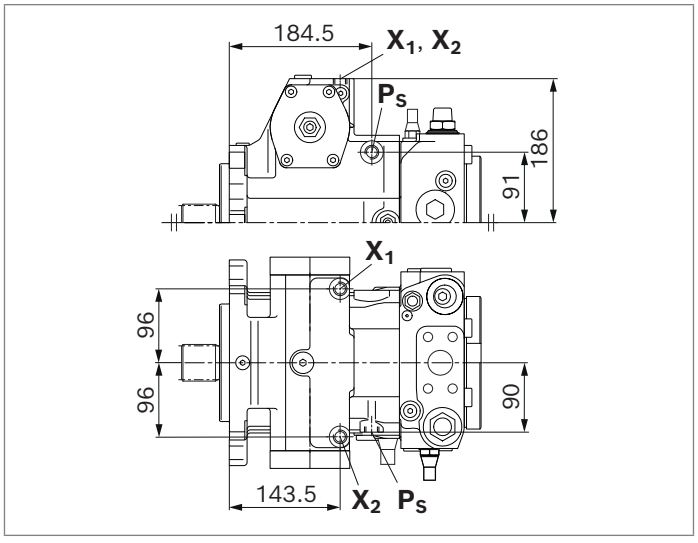

▼ **ET7/ET8** – Electronic control, direct operated, two DRE5

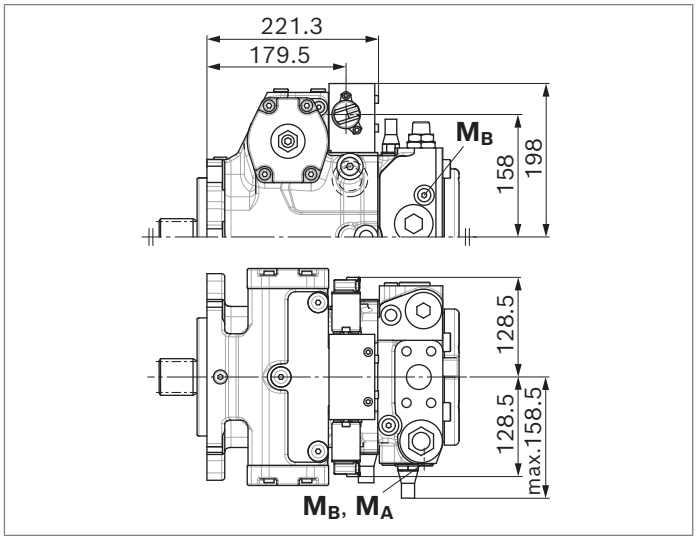

▼ **ETA/ETB** – Electronic control, direct operated, prepared for BODAS software

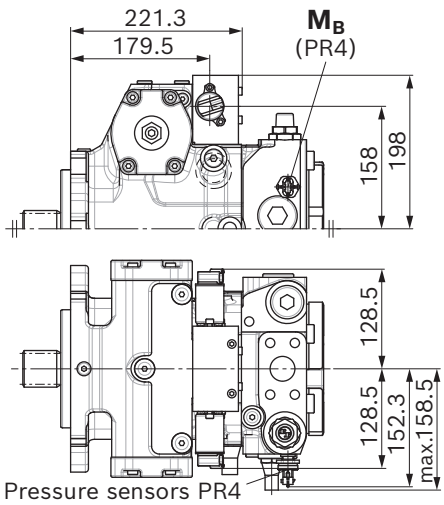

DA control valve

▼ **DA..2** – Fixed setting

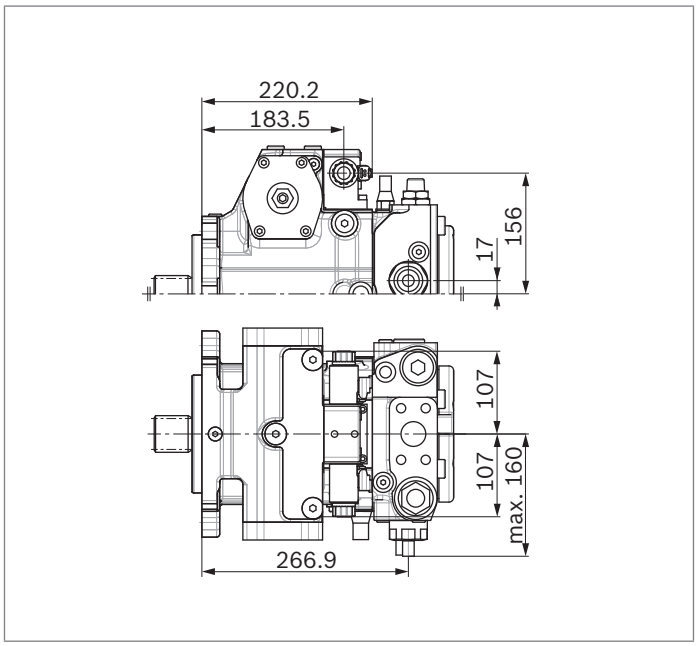

▼ **DA..3** – Mechanically adjustable with position lever

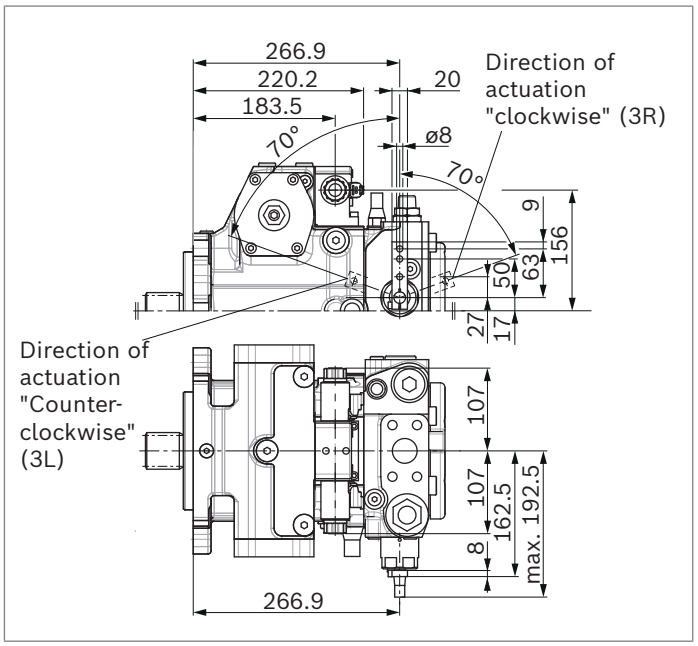

▼ **DA..7** – Fixed setting and ports for pilot control device

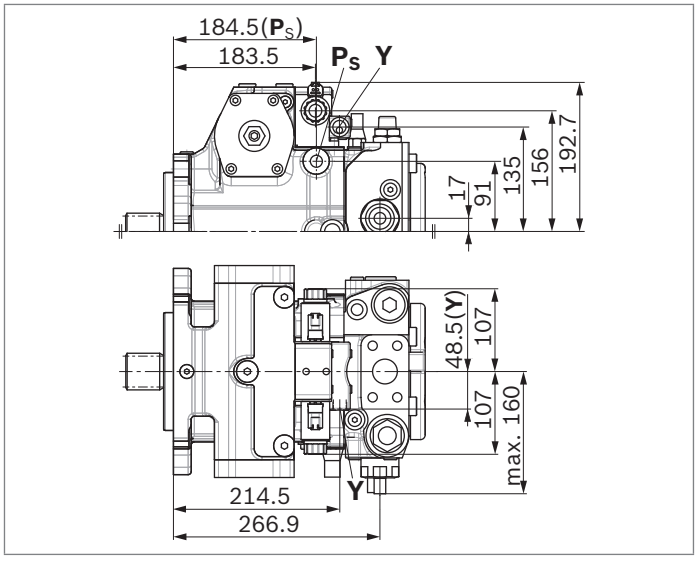

▼ **DA..8** – Fixed setting and inch valve mounted

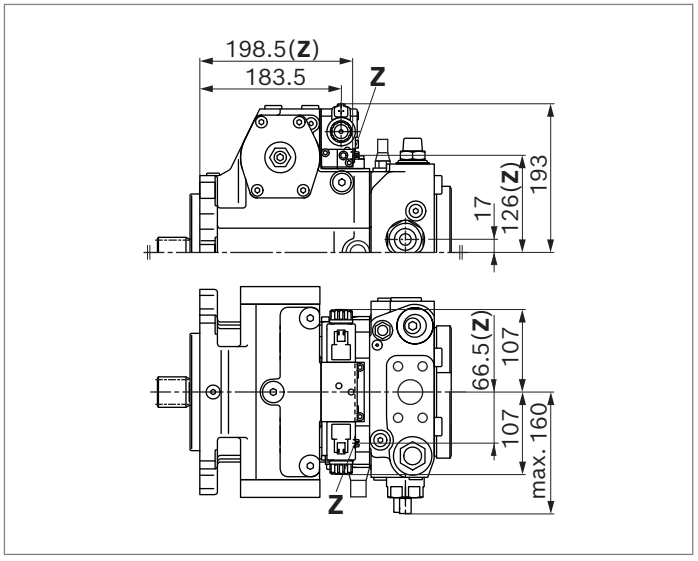

Dimensions, size 180

Version without control module

Standard: SAE working port **A** and **B** top and bottom, suction port **S** bottom (02)

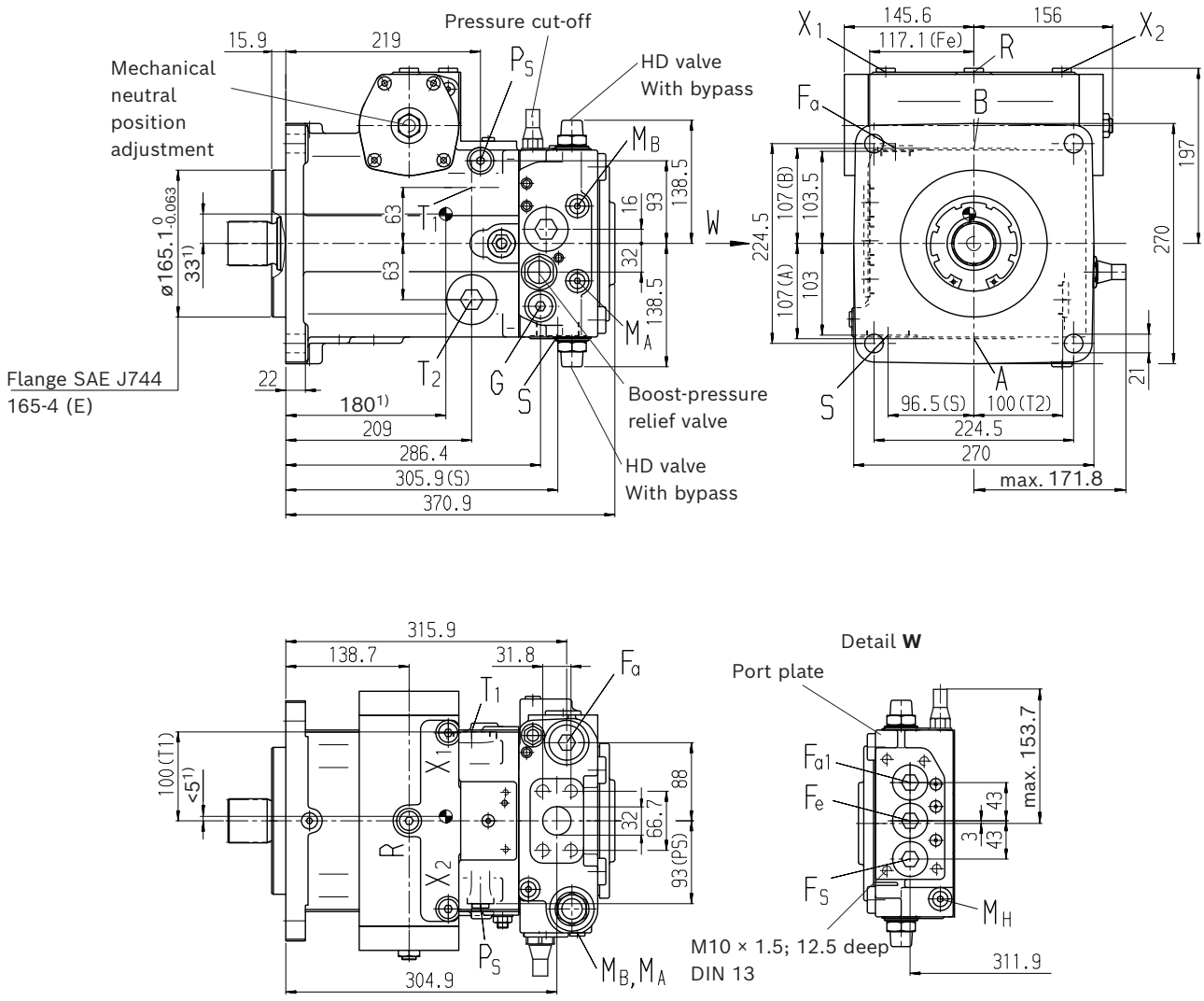

Center of gravity

Notice

Option: SAE working port **A** and **B** top and bottom, suction port **S** top (03). Port plate (02) rotated through 180°, installation drawing on request

1) Center of gravity

▼ **Splined shaft DIN 5480**

Z – W50×2×24×9g

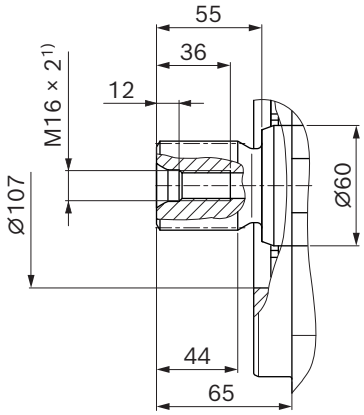

▼ **Splined shaft ANSI B92.1a**

S – 1 3/4 in 13T 8/16DP[2)]

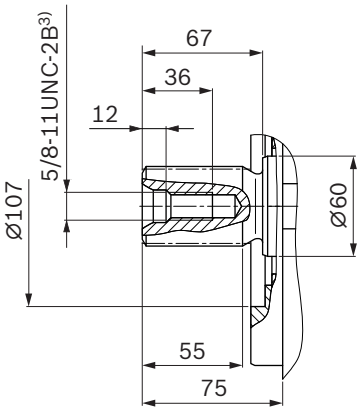

▼ **Splined shaft ANSI B92.1a**

T – 2 1/4 in 17T 8/16DP[2)]

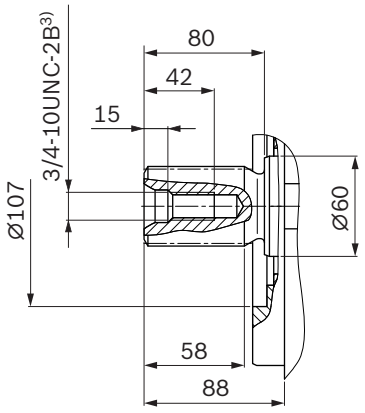

1) Involute spline according to ANSI B92.1a, 30° pressure angle, flat root, side fit, tolerance class 5
2) Center bore according to DIN 332 (thread according to DIN 13)
3) Thread according to ASME B1.1

Ports		Standard	Size	p_{max} [bar][4]	State[11]
A, B	Working port Fastening thread	SAEJ518[5] DIN 13	1 1/4 in M14 × 2; 19 deep	450	O
S	Suction port	DIN 3852[8]	M48 × 2; 22 deep	5	O[6]
$\mathbf{T}_1$	Drain port	DIN 3852[8]	M42 × 2; 20 deep	3	O[7]
$\mathbf{T}_2$	Drain port	DIN 3852[8]	M42 × 2; 20 deep	3	X[7]
R	Air bleed port	DIN 3852[8]	M16 × 1.5; 12 deep	3	X
$\mathbf{X}_1$, $\mathbf{X}_2$	Control pressure port (upstream of orifice)	DIN 3852[8]	M16 × 1.5; 12 deep	40	X
$\mathbf{X}_1$, $\mathbf{X}_2$	Control pressure port (upstream of orifice, DG only)	DIN 3852[8]	M16 × 1.5; 12 deep	40	O
$\mathbf{X}_3$, $\mathbf{X}_4$[9]	Stroking chamber pressure port	DIN 3852[8]	M12 × 1.5; 12 deep	40	X
G	Boost pressure port inlet	DIN 3852[8]	M22 × 1.5; 14 deep	40	X
$\mathbf{P}_S$	Pilot pressure port	DIN 3852[8]	M18 × 1.5; 12 deep	40	X
$\mathbf{P}_S$	Pilot pressure port (DA..7 only)	DIN 3852[8]	M18 × 1.5; 12 deep	40	O
Y	Pilot pressure port outlet (only DA..7)	DIN 3852[8]	M18 × 1.5; 12 deep	40	O
$\mathbf{M}_A$, $\mathbf{M}_B$	Measuring port pressure A, B	DIN 3852[8]	M12 × 1.5; 12 deep	450	X
$\mathbf{M}_H$	Measuring port, high pressure	DIN 3852[8]	M12 × 1.5; 12 deep	450	X
$\mathbf{F}_a$	Boost pressure port inlet	DIN 3852[8]	M33 × 2; 18 deep	40	X
$\mathbf{F}_{a1}$[10]	Boost pressure port inlet (attachment filter)	DIN 3852[8]	M33 × 2; 18 deep	40	X
$\mathbf{F}_e$[10]	Boost pressure port outlet	DIN 3852[8]	M33 × 2; 18 deep	40	X
$\mathbf{F}_S$[10]	Line from filter to suction port (cold start)	DIN 3852[8]	M33 × 2; 18 deep	40	X
$\mathbf{Y}_1$, $\mathbf{Y}_2$	Pilot pressure port (pilot signal HD only)	DIN 3852[8]	M14 × 1.5; 12 deep	40	O
Z	Pilot pressure port (inch signal only DA..8)	DIN 3852[8]	M10 × 1; 8 deep	80	X

4) Depending on the application, momentary pressure peaks can occur. Keep this in mind when selecting measuring devices and fittings.
5) Only dimensions according to SAE J518, metric fastening thread is a deviation from the standard.
6) Plugged for external boost pressure supply.
7) Depending on installation position, $\mathbf{T}_1$ or $\mathbf{T}_2$ must be connected (see also installation instructions on page 97).
8) The countersink can be deeper than specified in the standard. Ports designed for straight stud ends according to EN ISO 9974-2 type E
9) Optional, see page 87
10) The diameter of the countersink deviates from the standard. (For details, see page 90, dimensions of the countersinks)
11) O = Must be connected (plugged on delivery)
X = Plugged (in normal operation)

▼ **HD** – Proportional control, hydraulic, pilot-pressure related

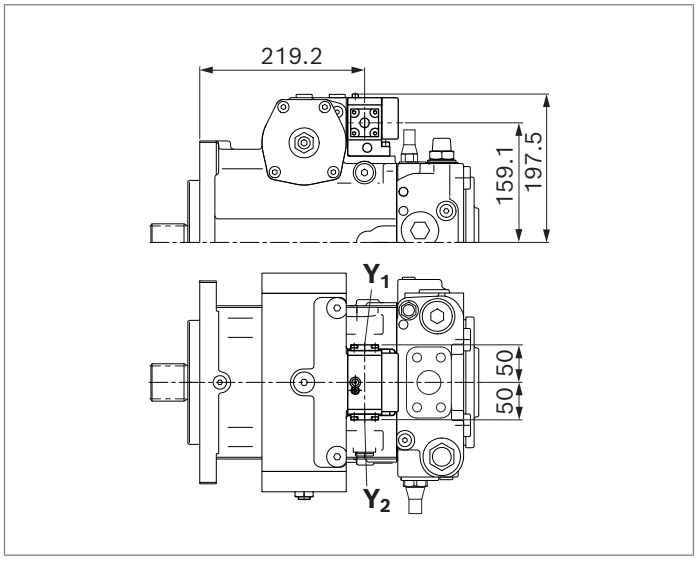

▼ **HW** – Proportional control, hydraulic, mechanical servo

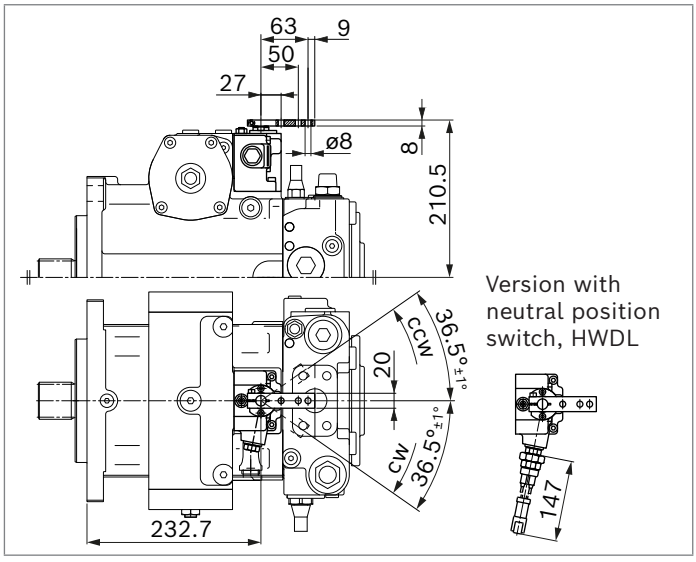

▼ **EP** – Proportional control, electric

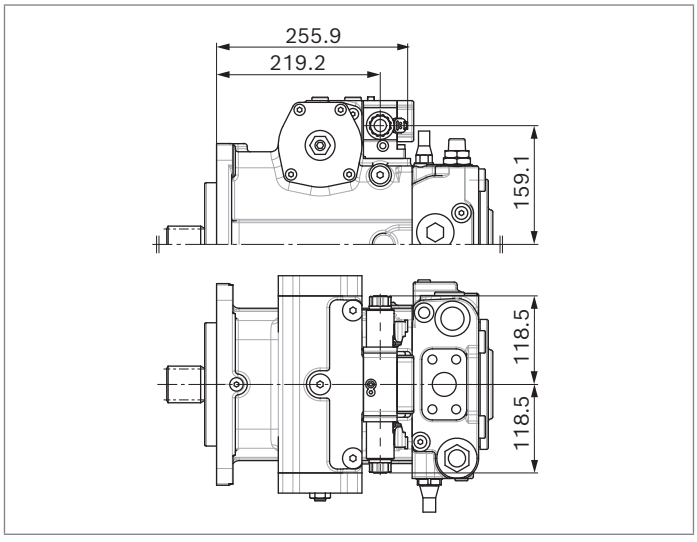

▼ **EZ** – Two-point control, electric

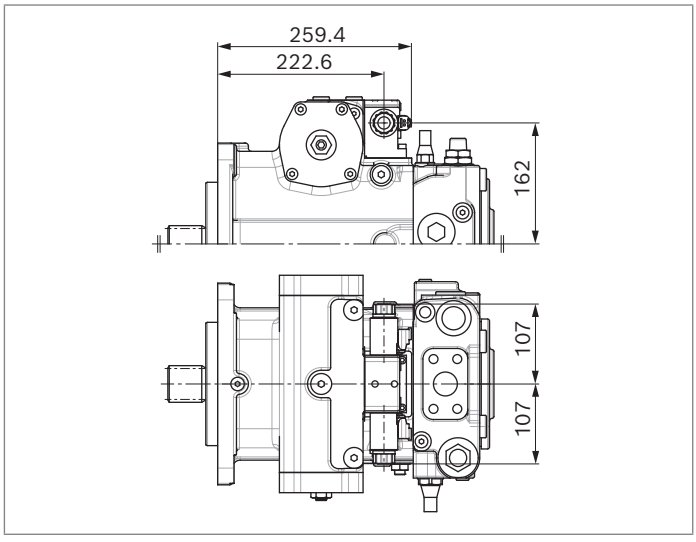

▼ **DG** – Hydraulic control, direct operated

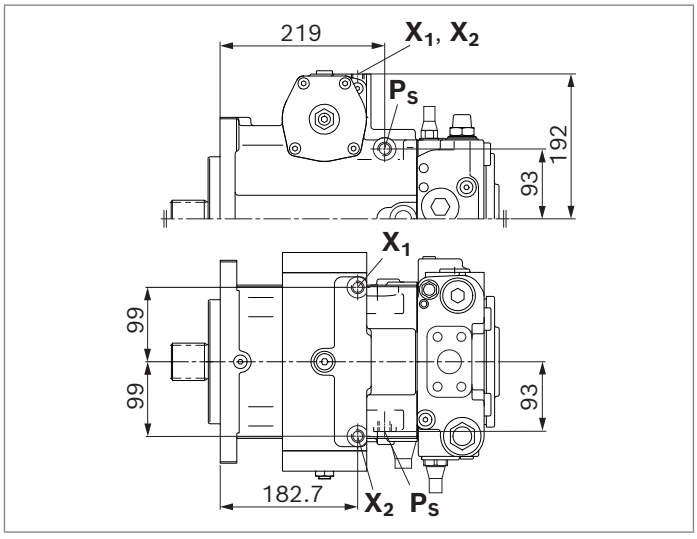

DA control valve

▼ **DA..2** – Fixed setting

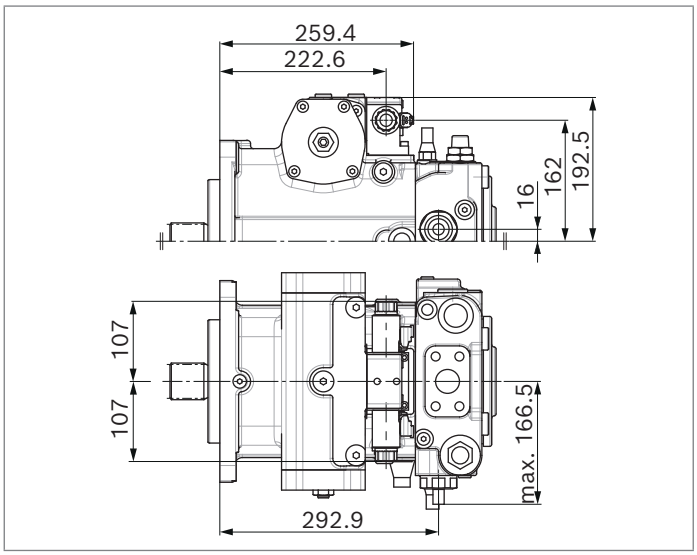

▼ **DA..7** – Fixed setting and ports for pilot control device

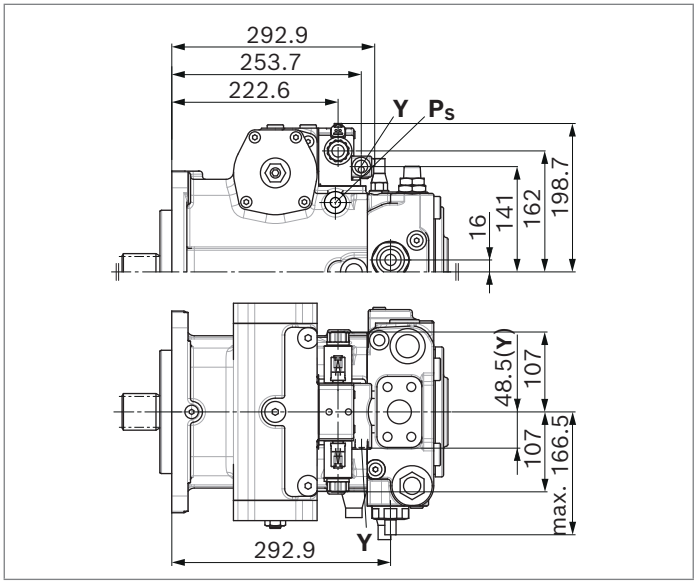

▼ **DA..8** – Fixed setting and inch valve mounted

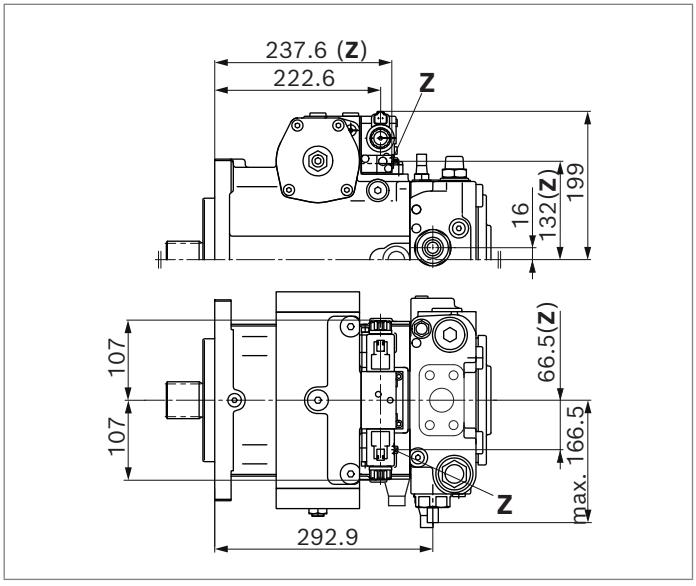

Dimensions, through drive

Flange SAE J744	Hub for splined shaft	28	40	56	71	90	125	180	Code
Without through drive		●	●	●	●	●	●	●	**00**
82-2 (A)	5/8 in 9T 16/32DP[1]	●	●	●	●	●	●	●	**01**

▼ **N00 (without boost pump, without through drive) / F00 (with boost pump, without through drive)**

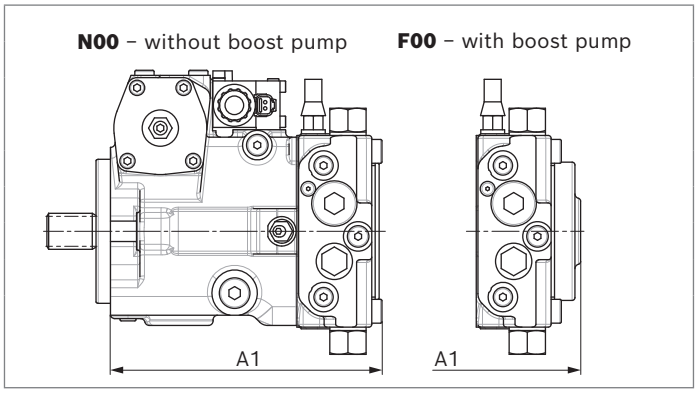

NG	A1 (N00)	A1 (F00)
28	213.9	223.4
40	220.2	235.7
56	239.4	256.4
71	279.1	293.6
90	287	301
125	320.9	326.4
180	370.9	370.9

▼ **F01[5], sizes 28 to 71 (with boost pump)**
Flange SAE J744: 82-2 (A)
Hub for splined shaft: 5/8 in 9T 16/32DP[1]

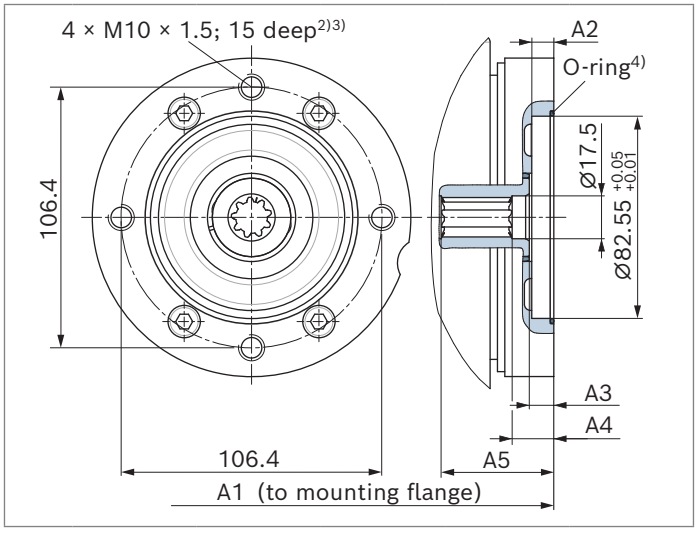

NG	A1	A2	A3	A4	A5
28	227.9	7.5	8.2	15.2	33.9
40	239.7	9	10	17	46
56	261.4	10	11	18	38.3
71	297.6	9	10	17	47.8

▼ **K01[5], sizes 28 to 71 (without boost pump)**
Flange SAE J744: 82-2 (A)
Hub for splined shaft: 5/8 in 9T 16/32DP[1]

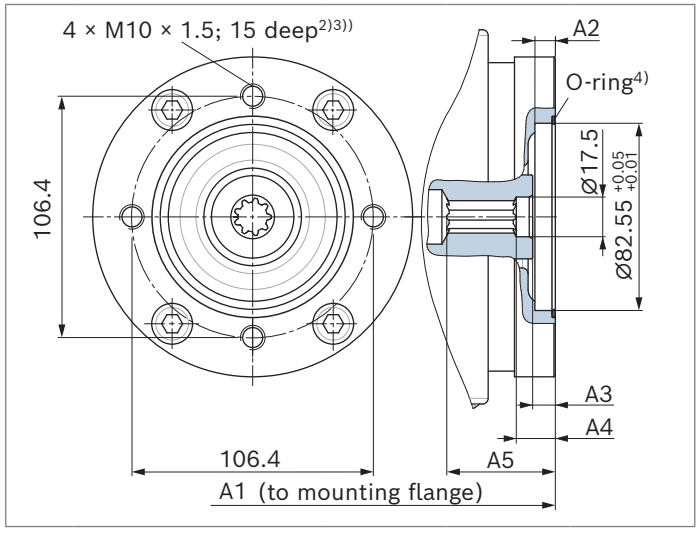

NG	A1	A2	A3	A4	A5
28	227.9	7.5	7.5	–	33.2
40	234.2	7.5	8.5	–	34.5
56	254.9	7.5	9	–	30.3
71	297.6	9	10	17.2	47.8

1) Involute spline according to ANSI B92.1a, 30° pressure angle, flat root, side fit, tolerance class 5
2) Thread according to DIN 13
3) Design according to VDI 2230 with μ = 0.1 for screw quality 8.8 according to ISO 898-1
4) O-ring included in the scope of delivery
5) Please state in plain text whether the 2-hole horizontal or the 2-hole vertical version is used.

Flange SAE J744	Hub for splined shaft	28	40	56	71	90	125	180	Code
82-2 (A)	5/8 in 9T 16/32DP[1]	●	●	●	●	●	●	●	01

▼ **F01[5], size 90 (with boost pump)**
Flange SAE J744: 82-2 (A)
Hub for splined shaft: 5/8 in 9T 16/32DP[1]

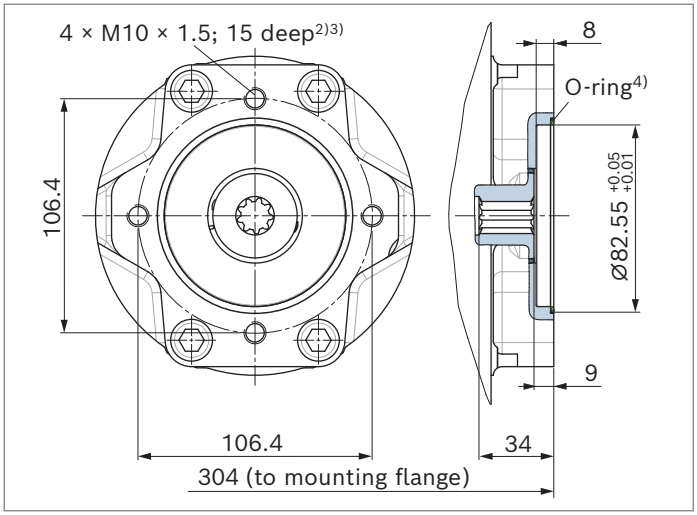

▼ **K01[5], size 90 (without boost pump)**
Flange SAE J744: 82-2 (A)
Hub for splined shaft: 5/8 in 9T 16/32DP[1]

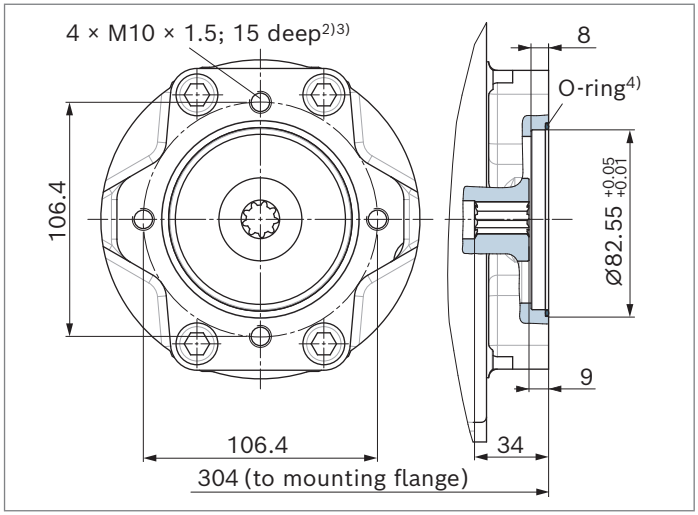

▼ **F01[5], size 125 (with boost pump)**
Flange SAE J744: 82-2 (A)
Hub for splined shaft: 5/8 in 9T 16/32DP[1]

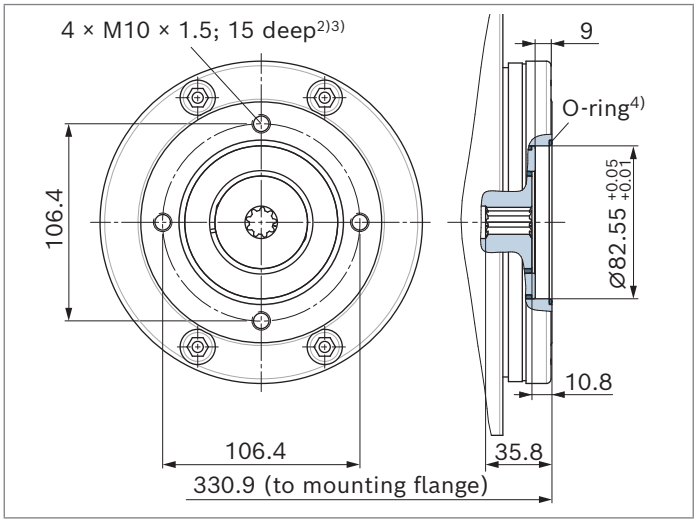

▼ **K01[5], size 125 (without boost pump)**
Flange SAE J744: 82-2 (A)
Hub for splined shaft: 5/8 in 9T 16/32DP[1]

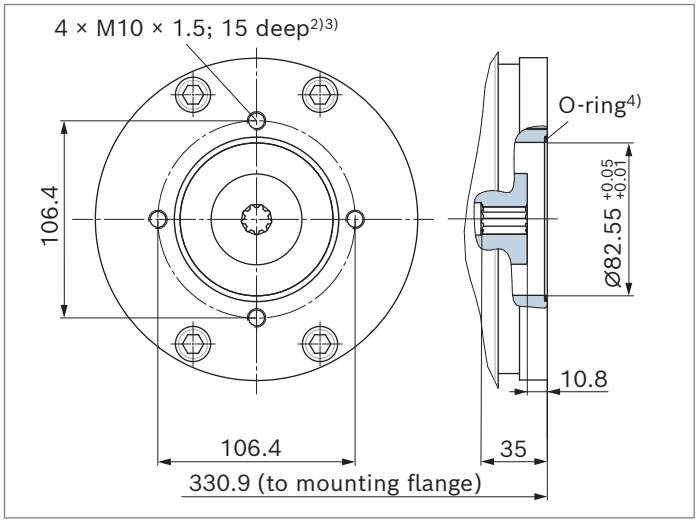

1) Involute spline according to ANSI B92.1a, 30° pressure angle, flat root, side fit, tolerance class 5
2) Thread according to DIN 13
3) Design according to VDI 2230 with μ = 0.1 for screw quality 8.8 according to ISO 898-1
4) O-ring included in the scope of delivery
5) Please state in plain text whether the 2-hole horizontal or the 2-hole vertical version is used.

Flange SAE J744	Hub for splined shaft	28	40	56	71	90	125	180	Code
82-2 (A)	5/8 in 9T 16/32DP[1]	●	●	●	●	●	●	●	**01**
	3/4 in 11T 16/32DP[1]	–	●	●	●	–	–	●	**52**

▼ **F01[5], size 180 (with boost pump)**
Flange SAE J744: 82-2 (A)
Hub for splined shaft: 5/8 in 9T 16/32DP[1]

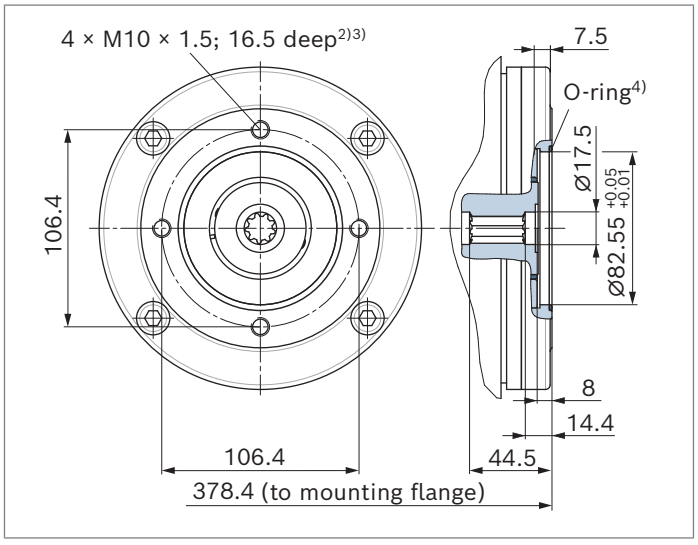

▼ **K01[5], size 180 (without boost pump)**
Flange SAE J744: 82-2 (A)
Hub for splined shaft: 5/8 in 9T 16/32DP[1]

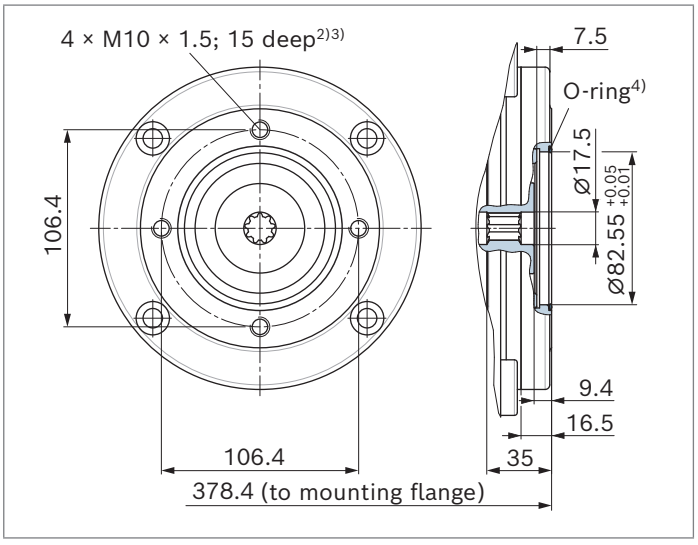

▼ **F52[5], sizes 40 to 71 (with boost pump)**
Flange SAE J744: 82-2 (A)
Hub for splined shaft: 3/4 in 11T 16/32DP[1]

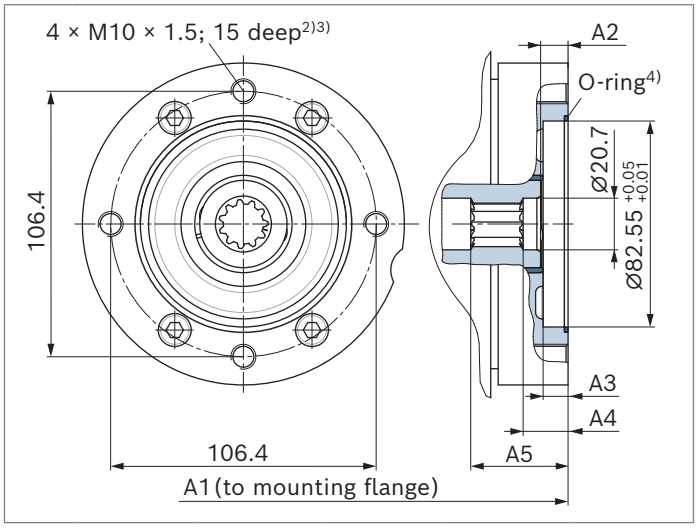

▼ **F52[5], size 180 (with boost pump)**
Flange SAE J744: 82-2 (A)
Hub for splined shaft: 3/4 in 11T 16/32DP[1]

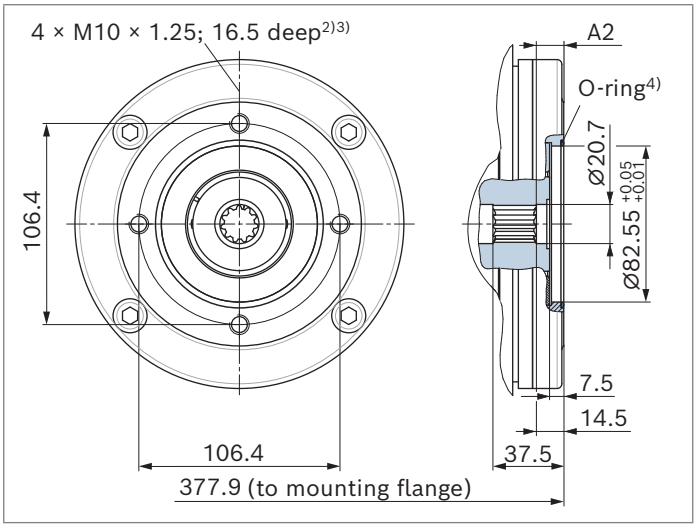

NG	A1	A2	A3	A4	A5
40	239.7	9	10	17	38
56	261.4	10	11	18	39
71	297.6	9	10	17	50

1) Involute spline according to ANSI B92.1a, 30° pressure angle, flat root, side fit, tolerance class 5
2) Thread according to DIN 13
3) Design according to VDI 2230 with μ = 0.1 for screw quality 8.8 according to ISO 898-1
4) O-ring included in the scope of delivery
5) Please state in plain text whether the 2-hole horizontal or the 2-hole vertical version is used.

Flange SAE J744	Hub for splined shaft	28	40	56	71	90	125	180	Code
101-2 (B)	7/8 in 13T 16/32DP[1]	●	●	●	●	●	●	●	02

▼ **F02, sizes 28 to 56 (with boost pump)**
Flange SAE J744: 101-2 (B)
Hub for splined shaft: 7/8 in 13T 16/32DP[1]

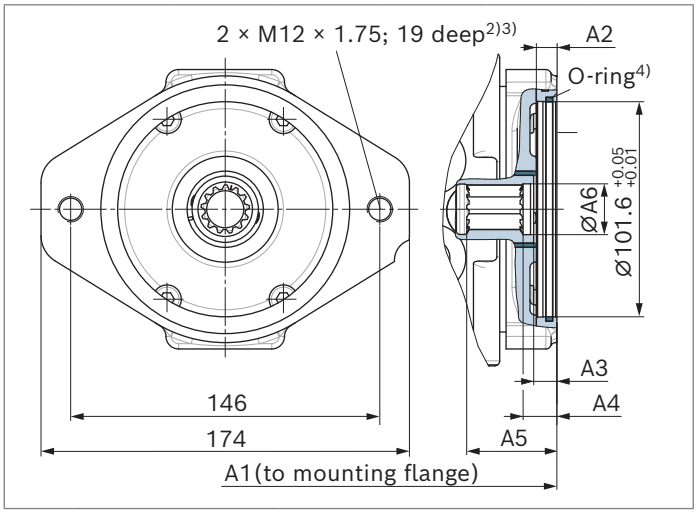

NG	A1	A2	A3	A4	A5	ØA6
28	230.4	9.7	10.7	16.2	42.3	24
40	240.7	9.7	11	16	42.6	24
56	262.4	11	12	18.5	48.4	25

▼ **K02, sizes 28 to 56 (without boost pump)**
Flange SAE J744: 101-2 (B)
Hub for splined shaft: 7/8 in 13T 16/32DP[1]

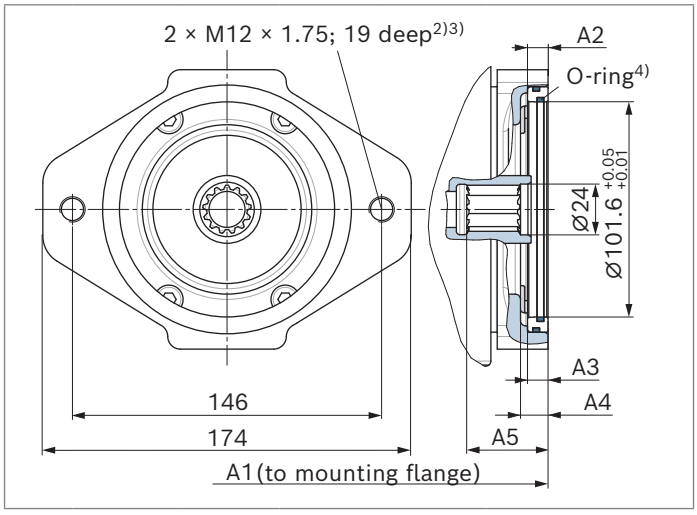

NG	A1	A2	A3	A4	A5
28	230.4	8	9.7	13.5	38.4
40	240.7	8	9.7	13	38.4
56	262.4	11	12	20.5	43.4

▼ **F02[5], size 71 (with boost pump)**
Flange SAE J744: 101-2 (B)
Hub for splined shaft: 7/8 in 13T 16/32DP[1]

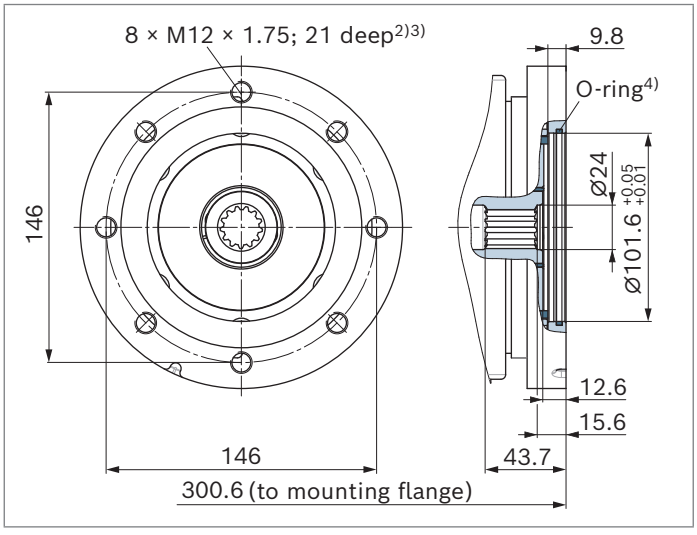

▼ **K02[5], size 71 (without boost pump)**
Flange SAE J744: 101-2 (B)
Hub for splined shaft: 7/8 in 13T 16/32DP[1]

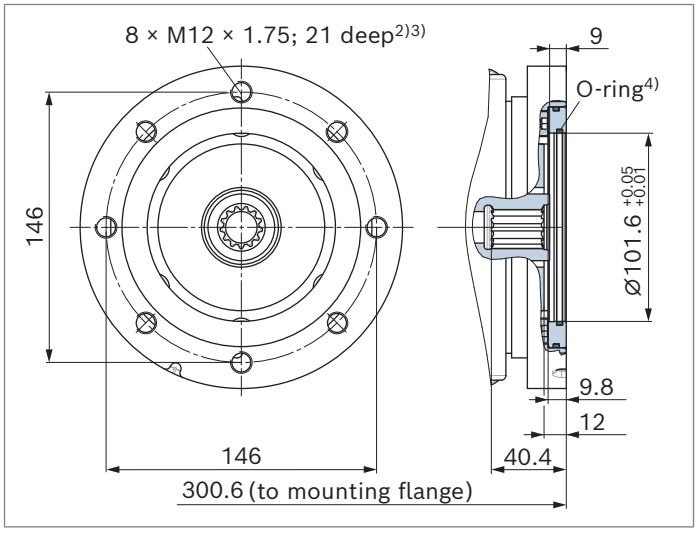

1) Involute spline according to ANSI B92.1a, 30° pressure angle, flat root, side fit, tolerance class 5
2) Thread according to DIN 13
3) Design according to VDI 2230 with μ = 0.1 for screw quality 8.8 according to ISO 898-1
4) O-ring included in the scope of delivery
5) Please state in plain text whether the 2-hole horizontal or the 2-hole vertical version is used.

Flange SAE J744	Hub for splined shaft	28	40	56	71	90	125	180	Code
101-2 (B)	7/8 in 13T 16/32DP[1]	●	●	●	●	●	●	●	02

▼ **F02[5], size 90 (with boost pump)**
Flange SAE J744: 101-2 (B)
Hub for splined shaft: 7/8 in 13T 16/32DP[1]

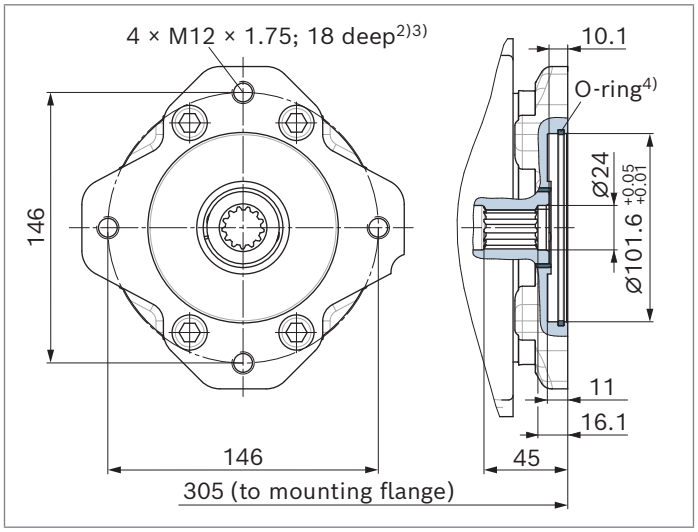

▼ **K02[5], size 90 (without boost pump)**
Flange SAE J744: 101-2 (B)
Hub for splined shaft: 7/8 in 13T 16/32DP[1]

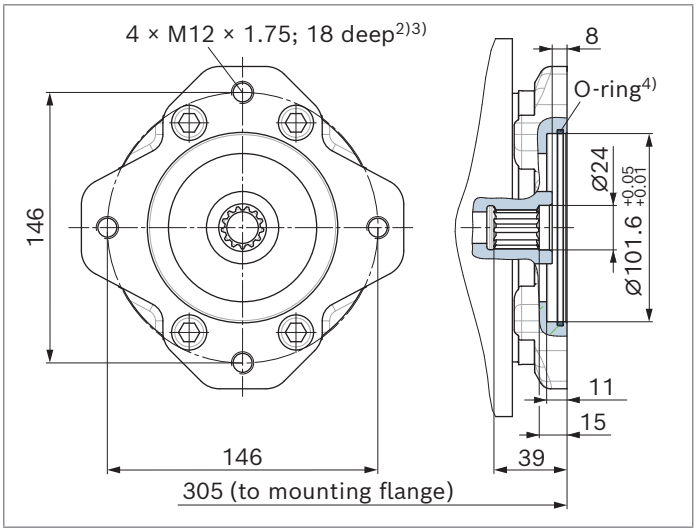

▼ **F02[5], size 125 (with boost pump)**
Flange SAE J744: 101-2 (B)
Hub for splined shaft: 7/8 in 13T 16/32DP[1]

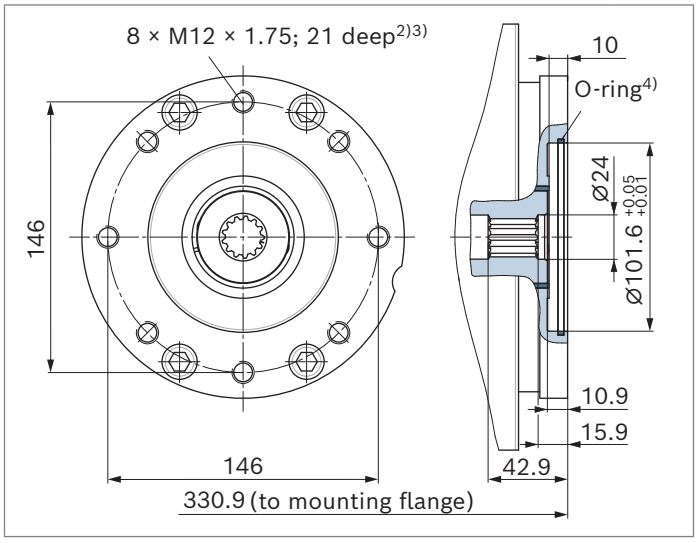

▼ **K02[5], size 125 (without boost pump)**
Flange SAE J744: 101-2 (B)
Hub for splined shaft: 7/8 in 13T 16/32DP[1]

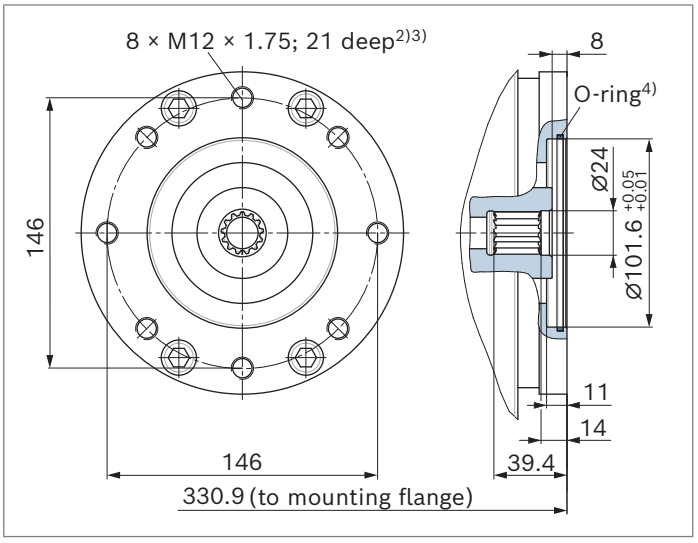

1) Involute spline according to ANSI B92.1a, 30° pressure angle, flat root, side fit, tolerance class 5
2) Thread according to DIN 13
3) Design according to VDI 2230 with μ = 0.1 for screw quality 8.8 according to ISO 898-1
4) O-ring included in the scope of delivery
5) Please state in plain text whether the 2-hole horizontal or the 2-hole vertical version is used.

Flange SAE J744	Hub for splined shaft	28	40	56	71	90	125	180	Code
101-2 (B)	7/8 in 13T 16/32DP[1]	●	●	●	●	●	●	●	**02**
	1 in 15T 16/32DP[1]	●	●	●	●	●	●	●	**04**

▼ **F02[5], size 180 (with boost pump)**
Flange SAE J744: 101-2 (B)
Hub for splined shaft: 7/8 in 13T 16/32DP[1]

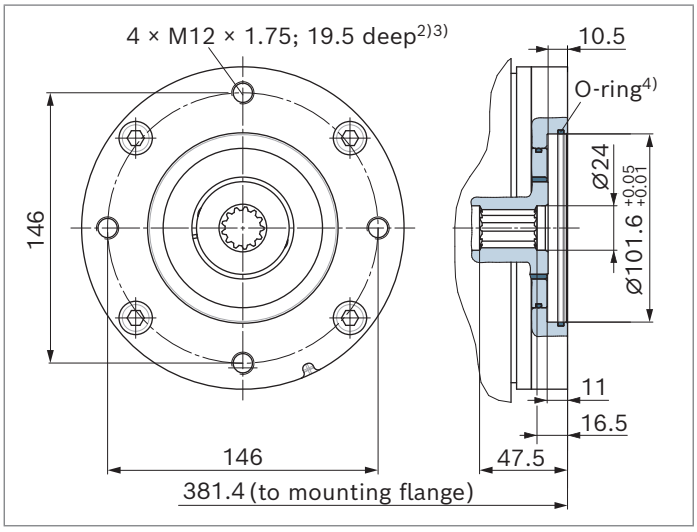

▼ **K02[5], size 180 (without boost pump)**
Flange SAE J744: 101-2 (B)
Hub for splined shaft: 7/8 in 13T 16/32DP[1]

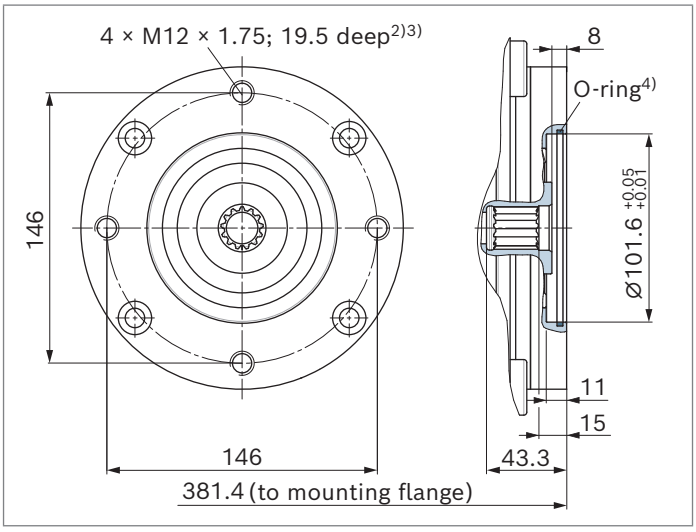

▼ **F04, sizes 28 to 56 (with boost pump)**
Flange SAE J744: 101-2 (B)
Hub for splined shaft: 1 in 15T 16/32DP[1]

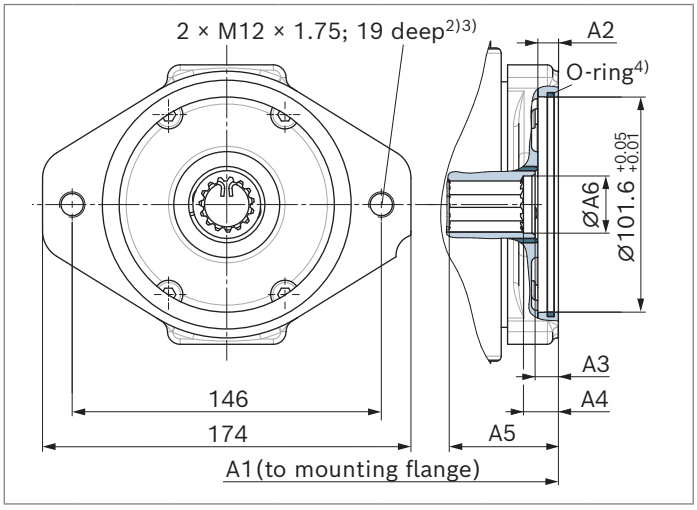

▼ **K04, sizes 28 to 56 (without boost pump)**
Flange SAE J744: 101-2 (B)
Hub for splined shaft: 1 in 15T 16/32DP[1]

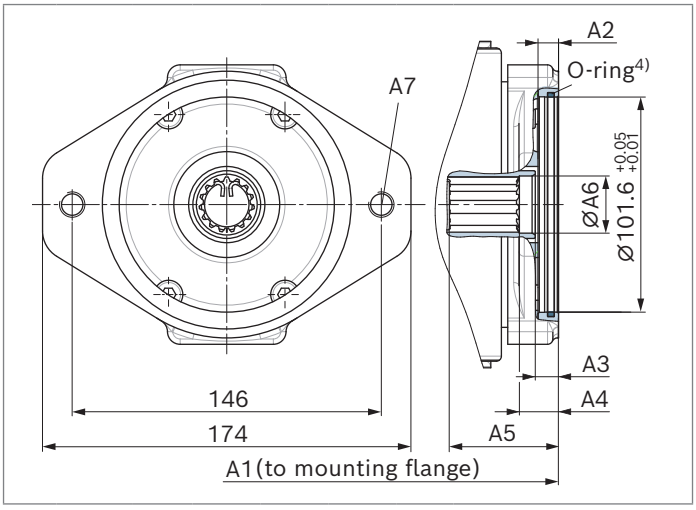

NG	A1	A2	A3	A4	A5	ØA6
28	230.4	9.7	10.7	14.7	42.4	27
40	240.7	9.7	11	16.5	51.6	27
56	262.4	11	12	18	49.1	27

NG	A1	A2	A3	A4	A5	ØA6	A7[2][3]
28	230.4	–	10.7	16.2	42.4	–	M12 × 1.75; 19 deep
40	240.7	9.7	11	18.5	51.6	27	M12 × 1.75; 18.7 deep
56	262.4	–	9	17.5	61.7	27	M12 × 1.75; 19 deep

1) Involute spline according to ANSI B92.1a, 30° pressure angle, flat root, side fit, tolerance class 5
2) Thread according to DIN 13
3) Design according to VDI 2230 with μ = 0.1 for screw quality 8.8 according to ISO 898-1
4) O-ring included in the scope of delivery
5) Please state in plain text whether the 2-hole horizontal or the 2-hole vertical version is used.

Flange SAE J744	Hub for splined shaft	28	40	56	71	90	125	180	Code
101-2 (B)	1 in 15T 16/32DP[1]	●	●	●	●	●	●	●	**04**

▼ **F04[5], size 71 (with boost pump)**
Flange SAE J744: 101-2 (B)
Hub for splined shaft: 1 in 15T 16/32DP[1]

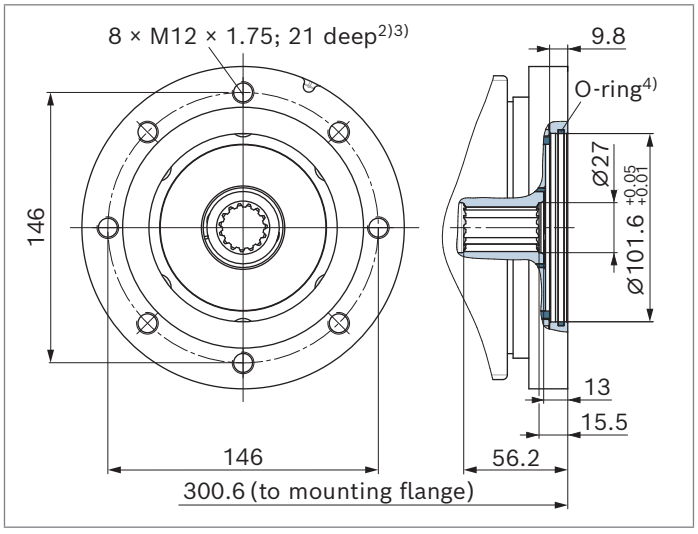

▼ **K04[5], size 71 (without boost pump)**
Flange SAE J744: 101-2 (B)
Hub for splined shaft: 1 in 15T 16/32DP[1]

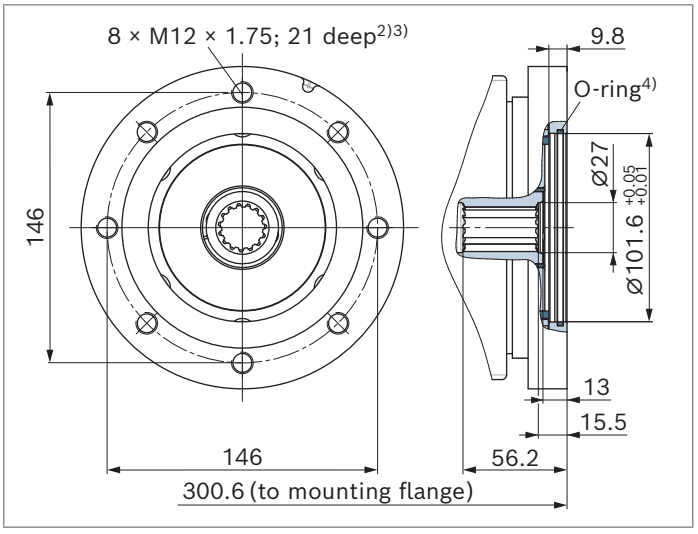

▼ **F04[5], size 90 (with boost pump)**
Flange SAE J744: 101-2 (B)
Hub for splined shaft: 1 in 15T 16/32DP[1]

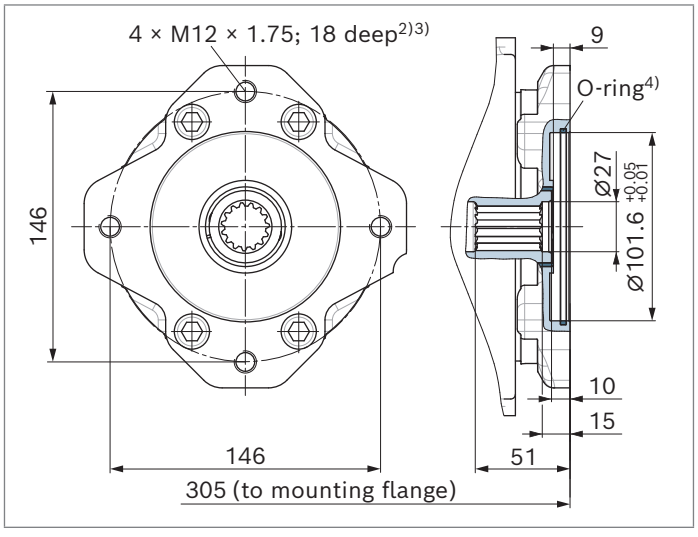

▼ **K04[5], size 90 (without boost pump)**
Flange SAE J744: 101-2 (B)
Hub for splined shaft: 1 in 15T 16/32DP[1]

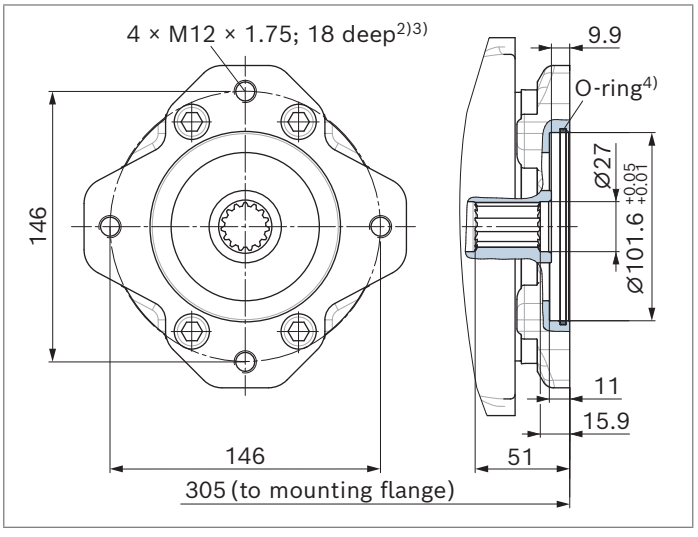

1) Involute spline according to ANSI B92.1a, 30° pressure angle, flat root, side fit, tolerance class 5
2) Thread according to DIN 13
3) Design according to VDI 2230 with μ = 0.1 for screw quality 8.8 according to ISO 898-1
4) O-ring included in the scope of delivery
5) Please state in plain text whether the 2-hole horizontal or the 2-hole vertical version is used.

Flange SAE J744	Hub for splined shaft	28	40	56	71	90	125	180	Code
101-2 (B)	1 in 15T 16/32DP[1]	●	●	●	●	●	●	●	04

▼ **F04[5], size 125 (with boost pump)**
Flange SAE J744: 101-2 (B)
Hub for splined shaft: 1 in 15T 16/32DP[1]

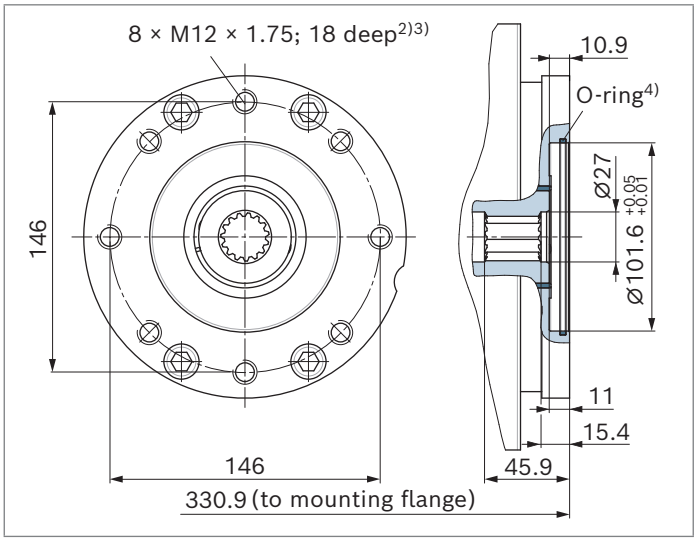

▼ **K04[5], size 125 (without boost pump)**
Flange SAE J744: 101-2 (B)
Hub for splined shaft: 1 in 15T 16/32DP[1]

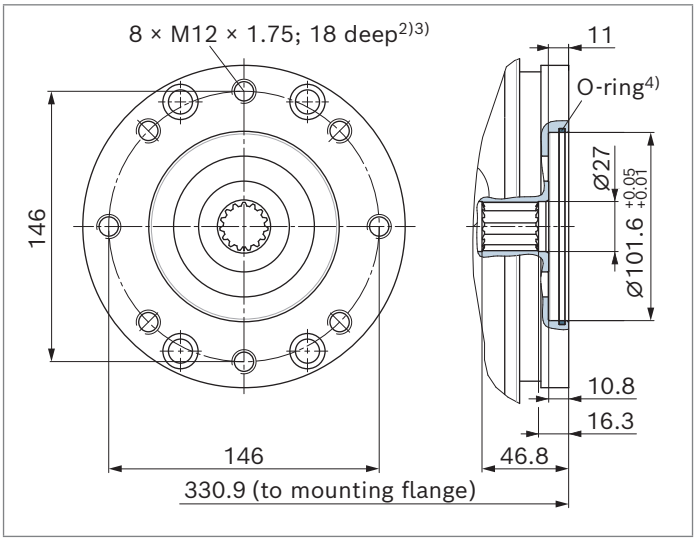

▼ **F04[5], size 180 (with boost pump)**
Flange SAE J744: 101-2 (B)
Hub for splined shaft: 1 in 15T 16/32DP[1]

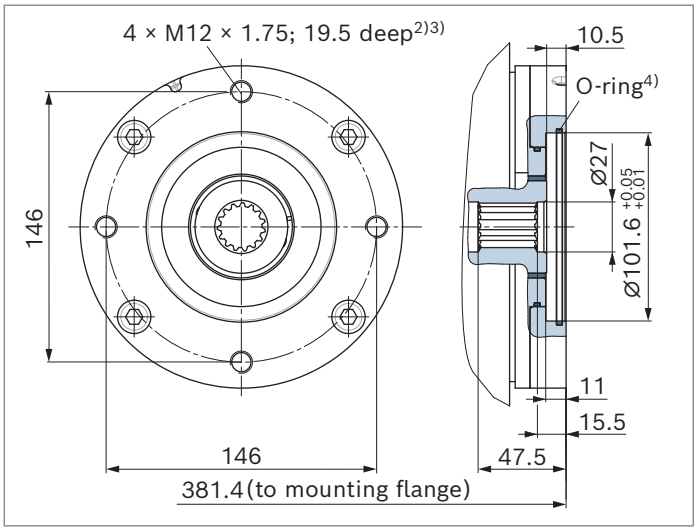

▼ **K04[5], size 180 (without boost pump)**
Flange SAE J744: 101-2 (B)
Hub for splined shaft: 1 in 15T 16/32DP[1]

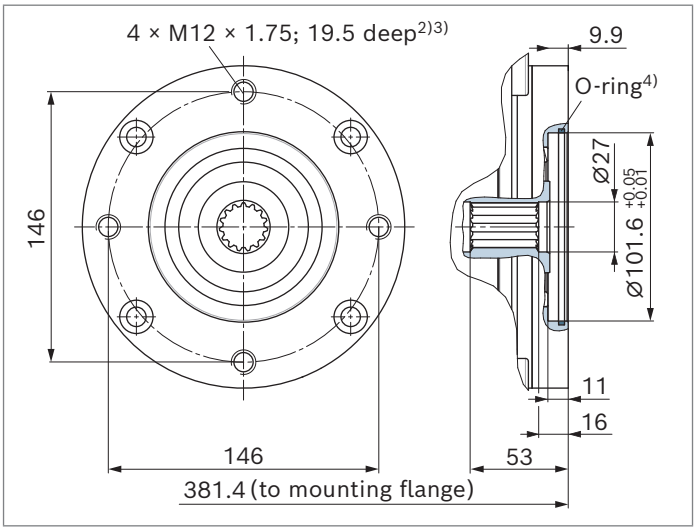

1) Involute spline according to ANSI B92.1a, 30° pressure angle, flat root, side fit, tolerance class 5
2) Thread according to DIN 13
3) Design according to VDI 2230 with μ = 0.1 for screw quality 8.8 according to ISO 898-1
4) O-ring included in the scope of delivery
5) Please state in plain text whether the 2-hole horizontal or the 2-hole vertical version is used.

Flange SAE J744	Hub for splined shaft	28	40	56	71	90	125	180	Code
127-2 (C)	1 in 15T 16/32DP[1]	–	●	–	–	–	–	–	**09**
127-2 (C)	1 1/4 in 14T 12/24DP[1]	–	–	●	●	–	–	●	**07**
127-2/4 (C)		–	–	–	–	●	●	–	

▼ **F09, size 40 (with boost pump)**
Flange SAE J744: 127-2 (C)
Hub for splined shaft: 1 in 15T 16/32DP[1]

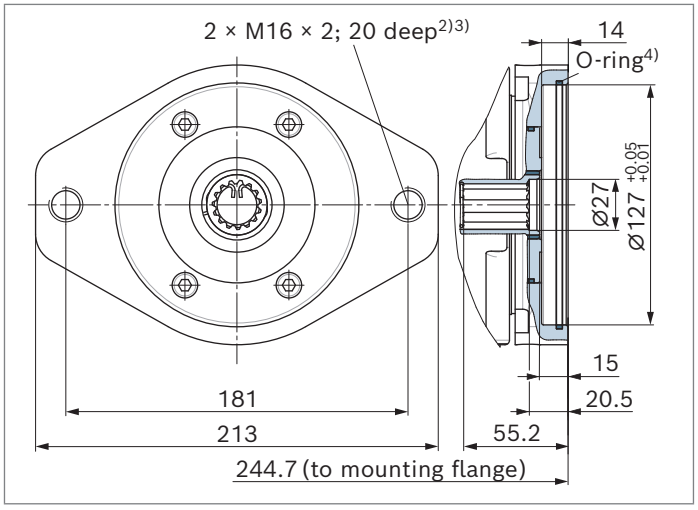

▼ **K09, size 40 (without boost pump)**
Flange SAE J744: 127-2 (C)
Hub for splined shaft: 1 in 15T 16/32DP[1]

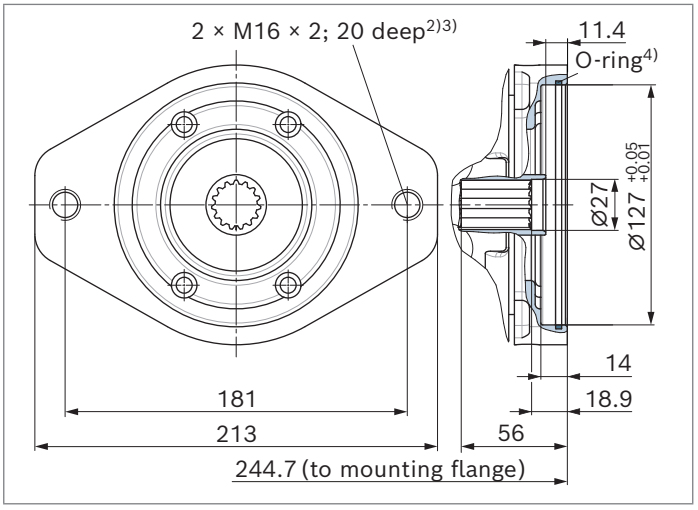

▼ **F07[5], size 56 (with boost pump)**
Flange SAE J744: 127-2 (C)
Hub for splined shaft: 1 1/4 in 14T 12/24DP[1]

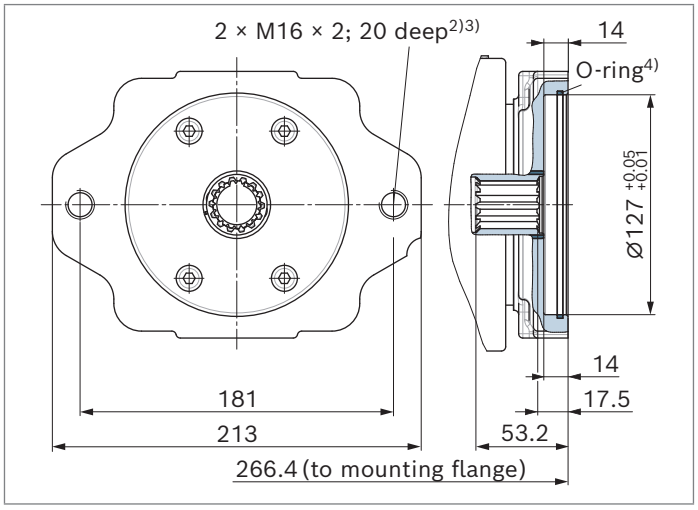

▼ **K07[5], size 56 (without boost pump)**
Flange SAE J744: 127-2 (C)
Hub for splined shaft: 1 1/4 in 14T 12/24DP[1]

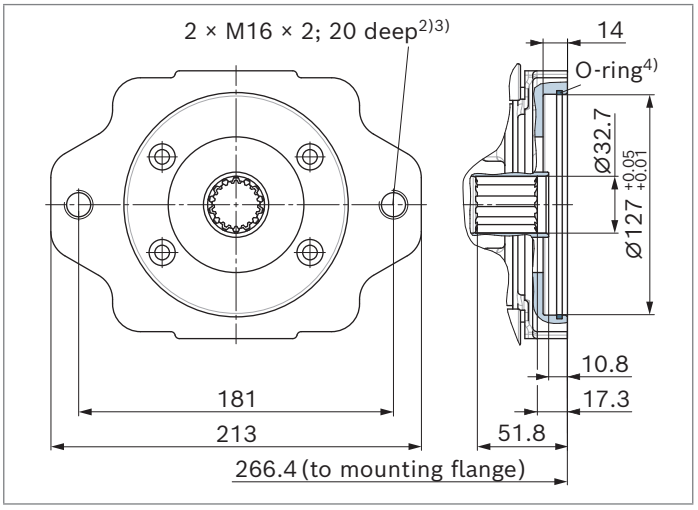

1) Involute spline according to ANSI B92.1a, 30° pressure angle, flat root, side fit, tolerance class 5
2) Thread according to DIN 13
3) Design according to VDI 2230 with μ = 0.1 for screw quality 8.8 according to ISO 898-1
4) O-ring included in the scope of delivery
5) Please state in plain text whether the 2-hole horizontal or the 2-hole vertical version is used.

Flange SAE J744	Hub for splined shaft	28	40	56	71	90	125	180	Code
127-2 (C)	1 1/4 in 14T 12/24DP[1]	–	–	●	●	–	–	●	07
127-2/4 (C)		–	–	–	–	●	●	–	

▼ **F07, size 71 (with boost pump)**
Flange SAE J744: 127-2 (C)
Hub for splined shaft: 1 1/4 in 14T 12/24DP[1]

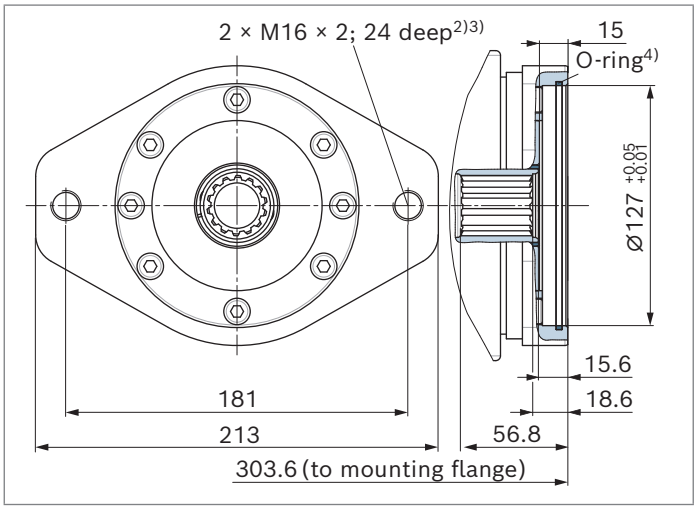

▼ **K07, size 71 (without boost pump)**
Flange SAE J744: 127-2 (C)
Hub for splined shaft: 1 1/4 in 14T 12/24DP[1]

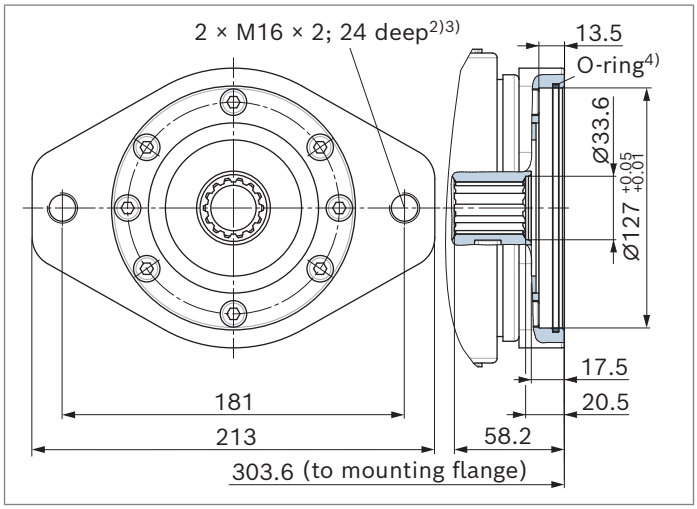

▼ **F07[5], size 90 (with boost pump)**
Flange SAE J744: 127-2/4 (C)
Hub for splined shaft: 1 1/4 in 14T 12/24DP[1]

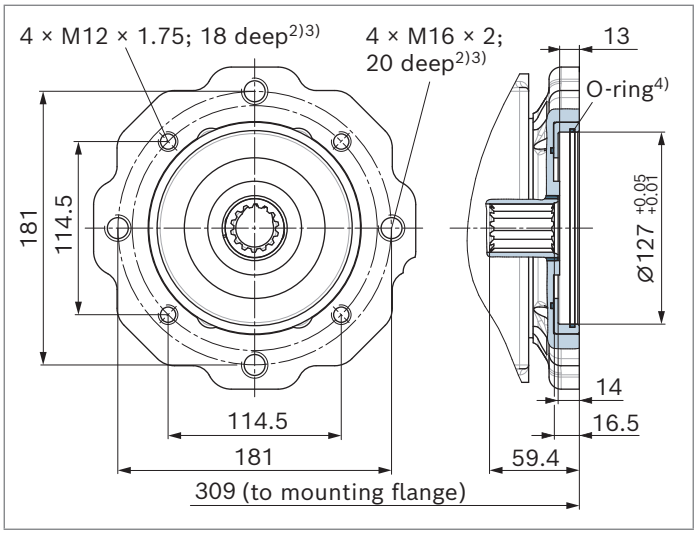

▼ **K07[5], size 90 (without boost pump)**
Flange SAE J744: 127-2/4 (C)
Hub for splined shaft: 1 1/4 in 14T 12/24DP[1]

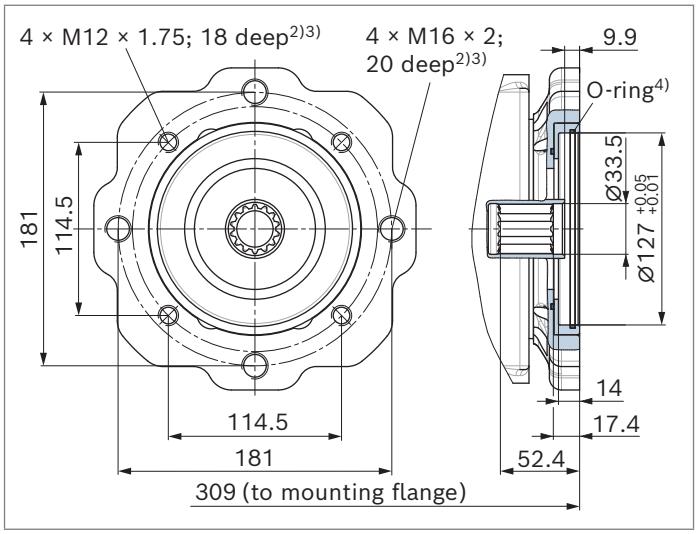

1) Involute spline according to ANSI B92.1a, 30° pressure angle, flat root, side fit, tolerance class 5
2) Thread according to DIN 13
3) Design according to VDI 2230 with μ = 0.1 for screw quality 8.8 according to ISO 898-1
4) O-ring included in the scope of delivery
5) Please state in plain text whether the 4-hole, the 2-hole horizontal or the 2-hole vertical version is used.

Flange SAE J744	Hub for splined shaft	28	40	56	71	90	125	180	Code
127-2 (C)	1 1/4 in 14T 12/24DP[1]	–	–	●	●	–	–	●	07
127-2/4 (C)		–	–	–	–	●	●	–	

▼ **F07[5], size 125 (with boost pump)**
Flange SAE J744: 127-2/4 (C)
Hub for splined shaft: 1 1/4 in 14T 12/24DP[1]

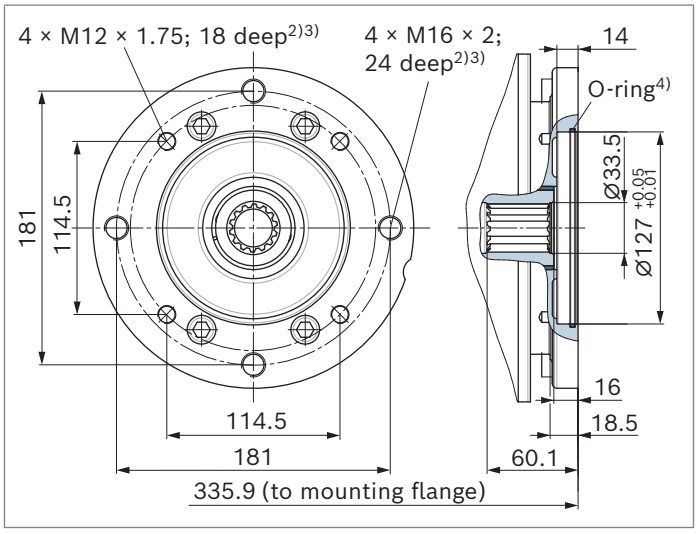

▼ **K07[5], size 125 (without boost pump)**
Flange SAE J744: 127-2/4 (C)
Hub for splined shaft: 1 1/4 in 14T 12/24DP[1]

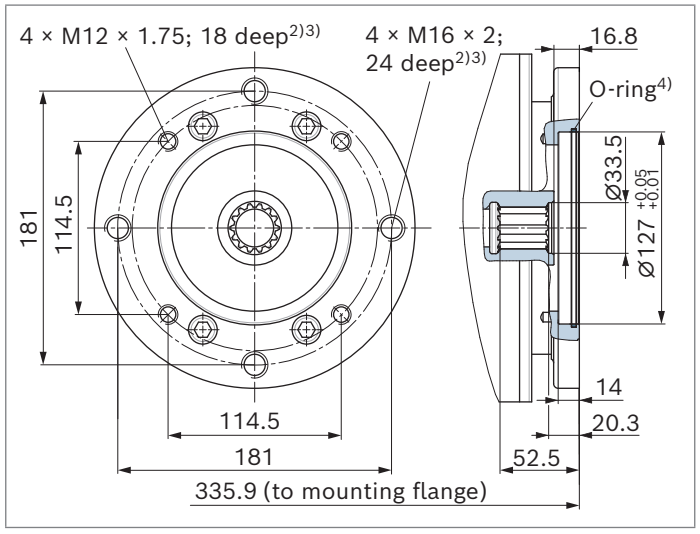

▼ **F07[6], size 180 (with boost pump)**
Flange SAE J744: 127-2 (C)
Hub for splined shaft: 1 1/4 in 14T 12/24DP[1]

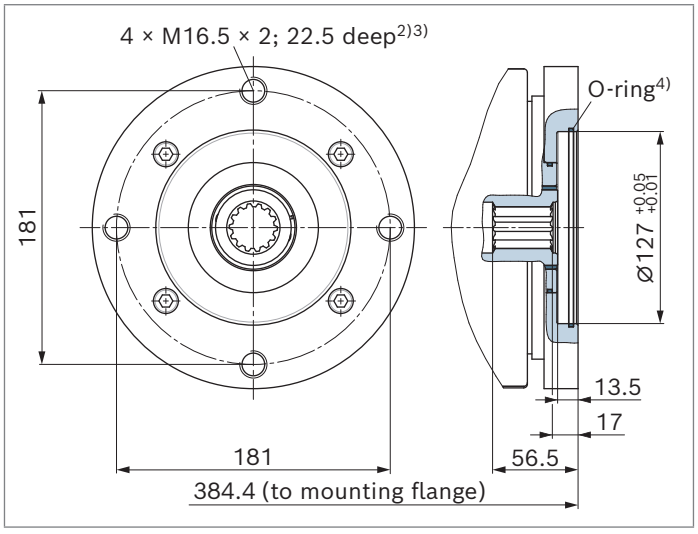

1) Involute spline according to ANSI B92.1a, 30° pressure angle, flat root, side fit, tolerance class 5
2) Thread according to DIN 13
3) Design according to VDI 2230 with μ = 0.1 for screw quality 8.8 according to ISO 898-1
4) O-ring included in the scope of delivery
5) Please state in plain text whether the 4-hole, the 2-hole horizontal or the 2-hole vertical version is used.
6) Please state in plain text whether the 2-hole horizontal or the 2-hole vertical version is used.

Flange SAE J744	Hub for splined shaft	28	40	56	71	90	125	180	Code
152-2/4 (D)	W35 2×16×9g (according to DIN 5480)	–	–	–	–	●	–	–	**73**
	1 3/4 in 13T 8/16DP[1]	–	–	–	–	–	●	●	**69**

▼ **F73[5], size 90 (with boost pump)**
Flange SAE J744: 152-2/4 (D)
Hub for splined shaft: W35 2×16×9g according to DIN 5480

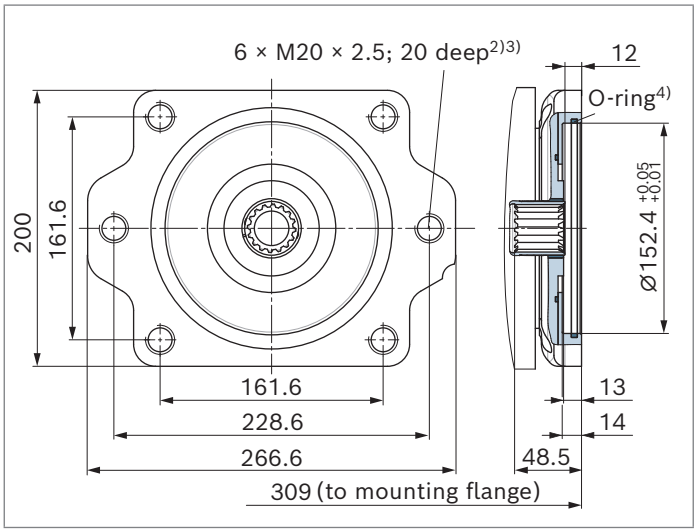

▼ **K73[5], size 90 (without boost pump)**
Flange SAE J744: 152-2/4 (D)
Hub for splined shaft: W35 2×16×9g according to DIN 5480

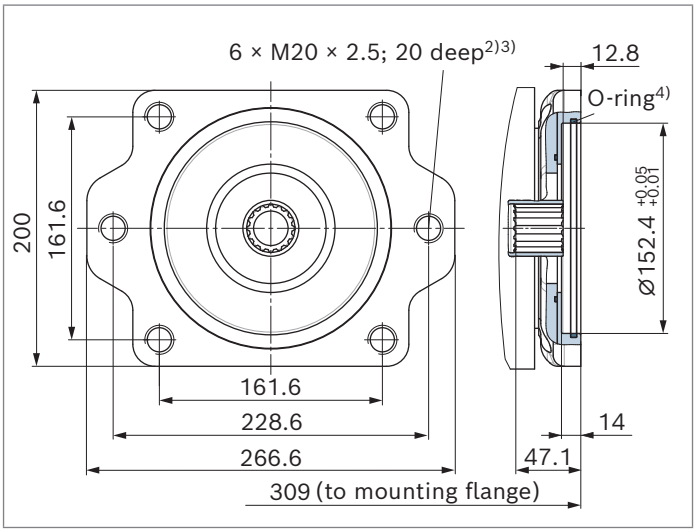

▼ **F69[5], size 125 (with boost pump)**
Flange SAE J744: 152-2/4 (D)
Hub for splined shaft: 1 3/4 in 13T 8/16DP[1]

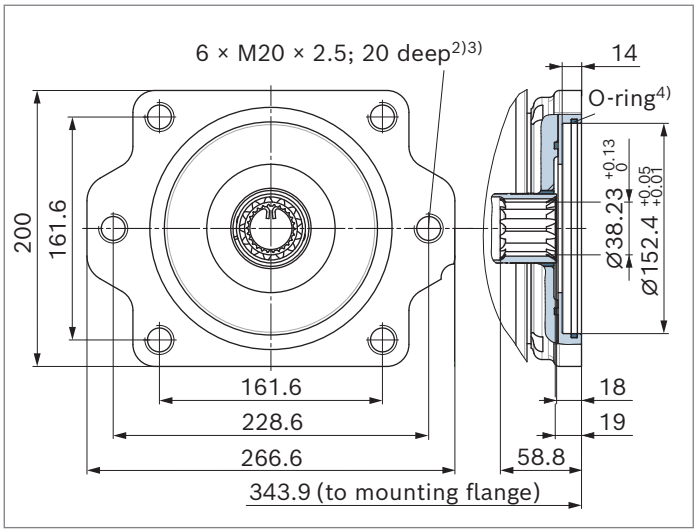

▼ **K69[5], size 125 (without boost pump)**
Flange SAE J744: 152-2/4 (D)
Hub for splined shaft: 1 3/4 in 13T 8/16DP[1]

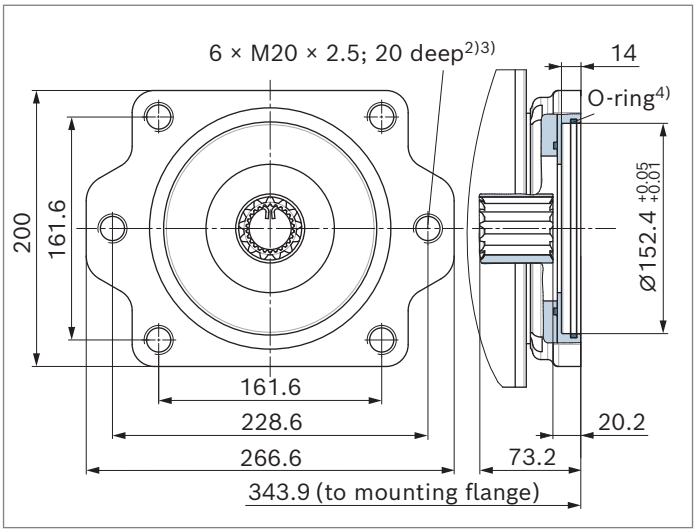

1) Involute spline according to ANSI B92.1a, 30° pressure angle, flat root, side fit, tolerance class 5
2) Thread according to DIN 13
3) Design according to VDI 2230 with μ = 0.1 for screw quality 8.8 according to ISO 898-1
4) O-ring included in the scope of delivery
5) Please state in plain text whether the 2-hole, the 4-hole or the 4+2-hole vertical version is used.

Flange SAE J744	Hub for splined shaft	28	40	56	71	90	125	180	Code
152-2/4 (D)	1 3/4 in 13T 8/16DP[1]	–	–	–	–	–	●	●	**69**
164-4 (E)	1 3/4 in 13T 8/16DP[1]	–	–	–	–	–	–	●	**72**

▼ **F69[5], size 180 (with boost pump)**
Flange SAE J744: 152-2/4 (D)
Hub for splined shaft: 1 3/4 in 13T 8/16DP[1]

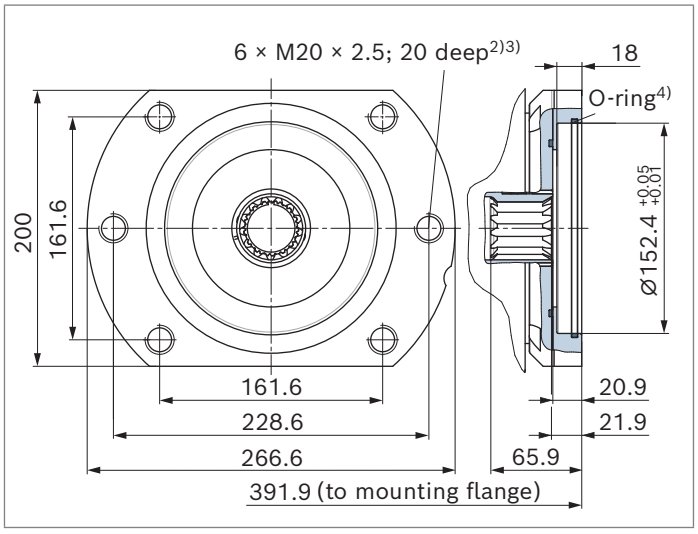

▼ **K69[5], size 180 (without boost pump)**
Flange SAE J744: 152-2/4 (D)
Hub for splined shaft: 1 3/4 in 13T 8/16DP[1]

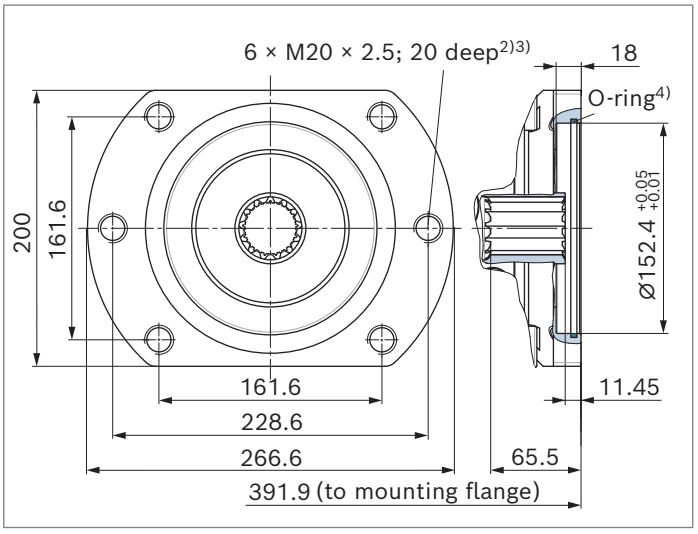

▼ **F72, size 180 (with boost pump)**
Flange SAE J744: 164-4 (E)
Hub for splined shaft: 1 3/4 in 13T 8/16DP[1]

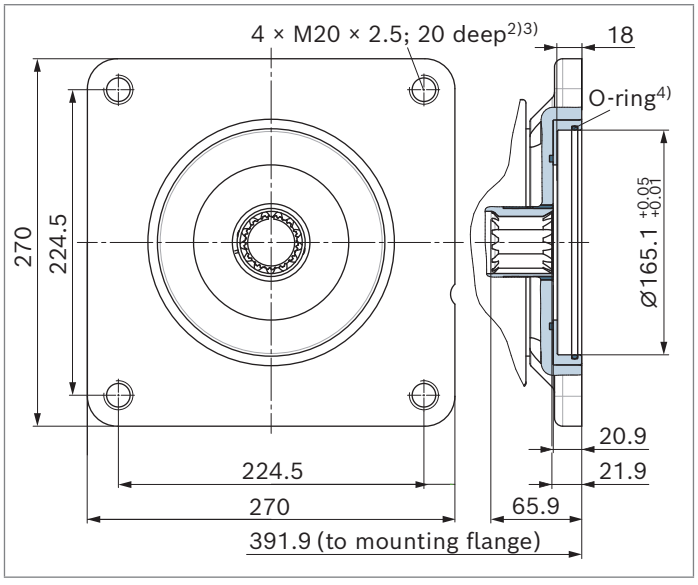

▼ **K72, size 180 (without boost pump)**
Flange SAE J744: 164-4 (E)
Hub for splined shaft: 1 3/4 in 13T 8/16DP[1]

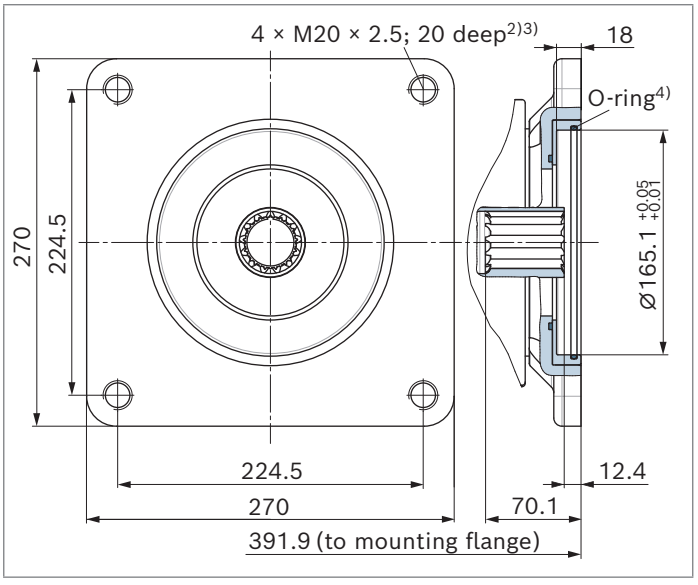

1) Involute spline according to ANSI B92.1a, 30° pressure angle, flat root, side fit, tolerance class 5
2) Thread according to DIN 13
3) Design according to VDI 2230 with μ = 0.1 for screw quality 8.8 according to ISO 898-1
4) O-ring included in the scope of delivery
5) Please state in plain text whether the 2-hole, the 4-hole or the 4+2-hole vertical version is used.

Overview of mounting options

Through drive[1]			Mounting options – 2nd pump			
Flange	**Hub for splined shaft**	**Code**	**A4VG/32 NG (shaft)**	**A4VG/35 NG (shaft)**	**A10VG/10 NG (shaft)**	**External gear pump[2]**
82-2 (A)	5/8 in	**F/K01**	–	–	–	AZPF, AZPS NG4 **...** 28, AZPW NG5 **...** 22
	3/4 in	**F52**	–	–	–	AZPF NG4 **...** 28
101-2 (B)	7/8 in	**F/K02**	–	–	18 (S)	AZPN-11 NG20 **...** 25, AZPG-22 NG28 **...** 100
	1 in	**F/K04**	28 (S)	–	28 (S) 45 (S)	–
127-2 (C)[3]	1 in	**F/K09**	40 (U)	–	–	–
	1 1/4 in	**F/K07**	40, 56, 71 (S)	56, 71, 90 (S7)	63 (S)	–
127-4 (C)[3]	1 in	**F/K09**	–		–	–
	1 1/4 in	**F/K07**	71 (S)	71, 90 (S7)	–	–
152-2 (D)	W35	**F/K73**	90 (Z)	–	–	–
	1 3/4 in	**F/K69**	90, 125 (S)	–	–	–
152-4 (D)	W35	**F/K73**	90 (Z)	–	–	–
	1 3/4 in	**F/K69**	90, 125 (S)	–	–	–
165-4 (E)	1 3/4 in	**F/K72**	180 (S)	–	–	–

Through drive[1]			Mounting options – 2nd pump				
Flange	**Hub for splined shaft**	**Code**	**A10V(S)O/31 NG (shaft)**	**A10VO/32 NG (shaft)**	**A10V(S)O/5x NG (shaft)**	**A11VO/1x NG (shaft)**	**A1VO/10**
82-2 (A)	5/8 in	**F/K01**	18 (U)	–	10, 18 (U)	–	–
	3/4 in	**F52**	18 (S)	–	10, 18 (S)	–	18, 28 (S3)
101-2 (B)	7/8 in	**F/K02**	28 (S) 45 (U)	45 (U)	28 (S) 45 (U)	–	18, 28, 35 (S4)
	1 in	**F/K04**	45 (S)	45 (S)	45 (S) 60, 63, 72 (U)	40 (S)	35 (S5)
127-2 (C)	1 in	**F/K09**	71, 88 (U)	71 (U)	–	–	–
	1 1/4 in	**F/K07**	71, 88 (S) 100 (U)	71 (S) 100 (U)	85, 100 (U)	–	–
127-4 (C)[3]	1 in	**F/K09**	–	45 (S) 71 (U)	60, 63, 72 (U)	–	–
	1 1/4 in	**F/K07**	–	71 (S)	60, 63, 72 (S) 85, 100 (U)	60 (S)	–
152-2 (D)	W35	**F/K73**	–	–	–	–	–
	1 3/4 in	**F/K69**	–	–	–	–	–
152-4 (D)	W35	**F/K73**	–	–	–	–	–
	1 3/4 in	**F/K69**	140 (S)	140, 180 (S)	–	95, 130, 145 (S)	–
165-4 (E)	1 3/4 in	**F/K72**	–	–	–	190 (S)	–

Notice
The mounting options listed only apply for drive shaft versions with undercut. Please contact us for drive shafts without undercut.

1) Availability of the individual sizes, see type code on page 2.
2) Bosch Rexroth recommends special versions of the gear pumps. Please contact us.
3) A10VO/5X with 4-hole flange attachable only to A4VG NG90 to 180

Combination pumps A4VG + A4VG

Total length A

A4VG	A4VG 2nd pump[1]						
1st pump	**NG28**	**NG40**	**NG56**	**NG71**	**NG90**	**NG125**	**NG180**
NG28	453.8	–	–	–	–	–	–
NG40	464.1	480.4	–	–	–	–	–
NG56	485.8	502.1	522.8	–	–	–	–
NG71	524.0	539.3	560.0	597.2	–	–	–
NG90	528.4	544.7	565.4	602.6	610.0	–	–
NG125	554.3	571.6	592.3	629.5	644.9	670.3	–
NG180	604.8	620.1	640.8	678.0	692.9	718.3	762.8

By using combination pumps, it is possible to have independent circuits without the need for splitter gearboxes.
When ordering combination pumps the type designations for the 1st and the 2nd pump must be linked by a "**+**".
Order example:
A4VG56EP3D1/32R-NAC02F073SP + A4VG56EP3D1/32R-NSC02F003SP
A tandem pump, with two pumps of equal size, is permissible without additional supports, assuming that the dynamic mass acceleration does not exceed maximum 10 *g* (= 98.1 m/s^2).
From size 71 upward, we recommend using the 4-hole mounting flange.
For combination pumps consisting of more than two pumps, the mounting flange must be rated for the permissible moment of inertia, please contact us.

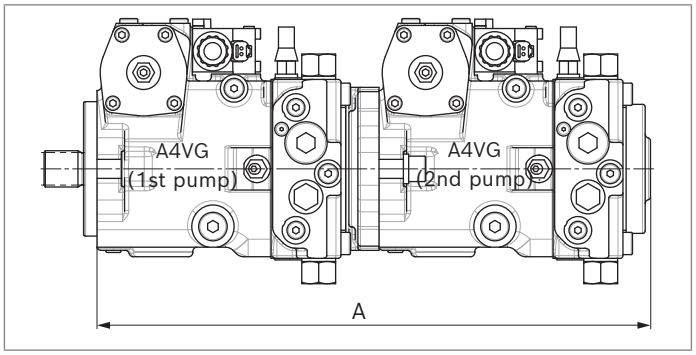

Notice
- The combination pump type code is shown in shortened form in the order confirmation.
- The permissible through-drive torques are to be observed (see page 12).

1) 2nd pump without through drive and with boost pump, F00

High-pressure relief valves

The two high-pressure relief valves protect the hydrostatic gear (pump and motor) from overloading. They limit the maximum pressure in the respective high-pressure line and serve simultaneously as boost valves.
The high-pressure relief valves are exclusively intended to protect the system from high-pressure peaks until the control dynamics of the pressure cut-off ensure the intended maximum working pressure.
A hydraulic-mechanical or electronic pressure cut-off must be provided for permanent high pressure limitation.

Setting ranges

High-pressure relief valve, direct operated (NG28 to 56)	Differential pressure setting Δp_{HD}
Setting range valve **3**, **5** Δp_{HD} 250 to 420 bar (see type code)	420 bar
	400 bar
	360 bar
	340 bar
	320 bar
	300 bar
	270 bar
	250 bar
Setting range valve **4**, **6** Δp_{HD} 100 to 250 bar (see type code)	250 bar
	230 bar
	200 bar
	150 bar
	100 bar

High-pressure relief valve, pilot operated (NG71 to 180)	Differential pressure setting Δp_{HD}
Setting range valve **1** Δp_{HD} 100 to 420 bar (see type code)	420 bar
	400 bar
	360 bar
	340 bar
	320 bar
	300 bar
	270 bar
	250 bar
	230 bar
	200 bar
	150 bar
	100 bar

1) Size 28 without port F_{a1} and F_S
2) Only sizes 28 to 71 are designed with inlet filtration in X_1/X_2
3) Not applicable for version without pressure cut-off.

Settings on high-pressure relief valve A and B	
Differential pressure setting	Δp_{HD} = ... bar
Test pressure of the HD valve (at $q_{V\,1}$) ($p_{max} = \Delta p_{HD} + p_{Sp}$)	p_{max} = ... bar

- The valve settings are made at n = 1000 rpm and at $V_{g\,max}$ ($q_{v\,1}$). There may be deviations with other operating parameters.
- When ordering, state the differential pressure setting Δp_{HD} in the plain text.

▼ **Circuit diagram**[1)]

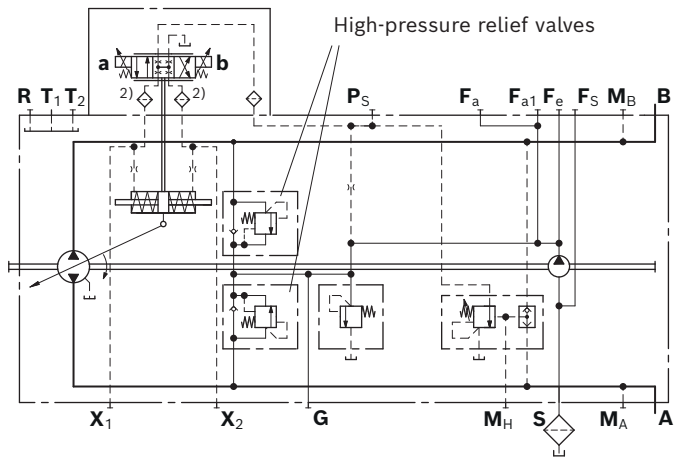

Example: Δp drive design = 370 bar ($p_{A,\,B} - p_{Sp}$)

Max. working pressure $p_{A,B}$	–	Boost pressure p_{Sp}	+	Safety	=	Differential pressure Δp_{HD}
390 bar	–	20 bar	+	30 bar	=	**400 bar**

- Test pressure of the HD valve (at q_{V1}):
  p_{max} = 420 bar ($p_{max} = \Delta p_{HD} + p_{Sp}$)

▼ **Setting diagram**

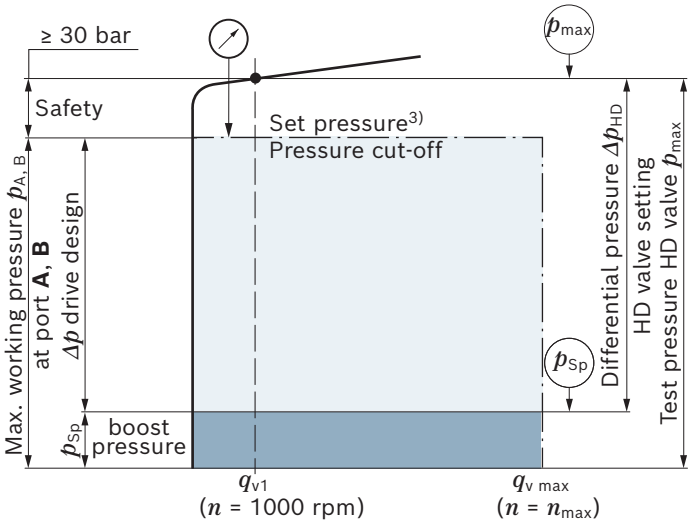

Key	
HD valve	High-pressure relief valve
Test pressure HD valve p_{max}	The factory-set pressure value set at q_{V1}
Differential pressure HD valve Δp_{HD}	Test pressure HD valve (abs.) minus the boost pressure setting
Maximum working pressure $p_{A, B}$	The total design of the hydrostatic drive is based on the maximum working pressure $p_{A, B}$. It is composed of the feed pressure setting and the Δp drive design.
Δp Drive design	Differential pressure value determining the available torque at the hydraulic motor ($p_{A, B} - p_{Sp}$).
Boost pressure p_{Sp}	Boost pressure setting of the boost-pressure relief valve
Safety	Required distance between maximum working pressure and test pressure of the high-pressure relief valve-to prevent constant response of the high-pressure relief valves at maximum working pressure.

Notice
Upon response of the high-pressure relief valve, the permissible temperature and viscosity must be complied with.

Bypass function
A connection between the two high-pressure passages **A** and **B** can be established using the bypass function (e.g. for machine towing).

- **Towing speed**
  The maximum towing speed depends on the gear ratio in the vehicle and must be calculated by the vehicle manufacturer. The corresponding flow of q_v = 30 l/min may not be exceeded.
- **Towing distance**
  Only tow the vehicle out of the immediate danger zone.

For further information on the bypass function, see the instruction manual.

Notice
The bypass function and the pilot operated high-pressure relief valves (size 71 to 180) are not illustrated in the circuit diagrams.

Pressure cut-off

The pressure cut-off is a pressure control which, after reaching the set pressure, adjusts the displacement of the pump back to $V_{g\ min}$.
This valve limits the permanent maximum working pressure by reducing the control pressure and thus prevents the high-pressure relief valves from responding.
The control dynamics of the pressure cut-off by control pressure reduction depends on the selected control device, rotational speed and operating point of the pump.
The system must be designed in such a way that the control dynamics of the pressure cut-off are sufficient to avoid overloading of the high-pressure relief valves.
The setting range of the pressure cut-off may be anywhere within the entire working pressure range. However, it must be set 30 bar lower than the setting value of the high-pressure relief valves (see setting diagram, page 84).
The function of the pressure cut-off in combination with a DG control is described on page 20.
Please state the setting value of the pressure cut-off in plain text when ordering.

▼ **Circuit diagram with pressure cut-off**
Example: Two-point control, electric, EZ1D/EZ2D

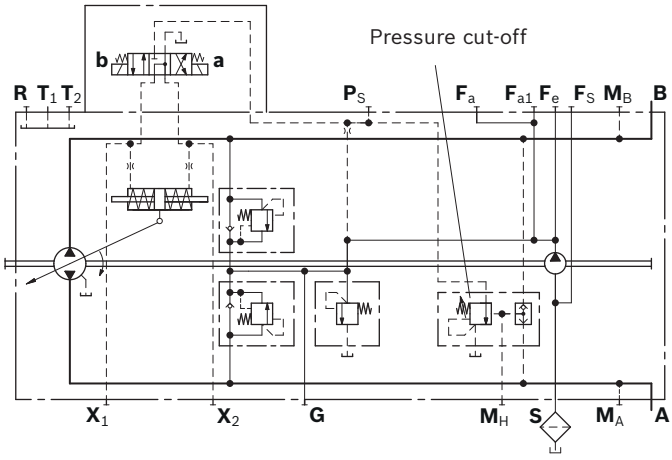

Mechanical stroke limiter

The mechanical stroke limiter is an auxiliary function allowing the maximum displacement of the pump to be steplessly reduced, regardless of the control module used. By means of two threaded pins, the stroke of the stroking piston and thus the maximum swivel angle of the pump can be limited.

Notice
Threaded pins are mounted from the inside (screw-out protection) and can no longer be removed from the outside.

Dimensions

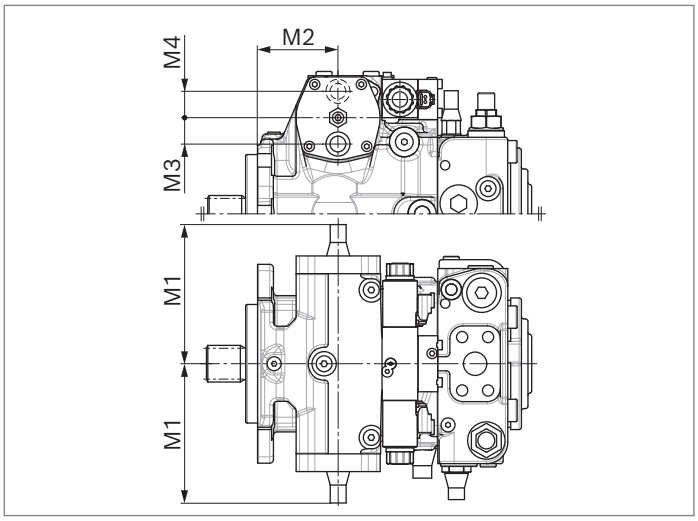

NG	M1 max.	M2	M3	M4
28	125.5	40.1	24	–
40	125.5	38.1	24	–
56	141.5	44	25.5	–
71	151	86.3	–	28.5
90	155	95.7	31.5	–
125	177.5	104.5	–	35.5
180	184.5	138.7	38	–

▼ **Circuit diagram**[1)]

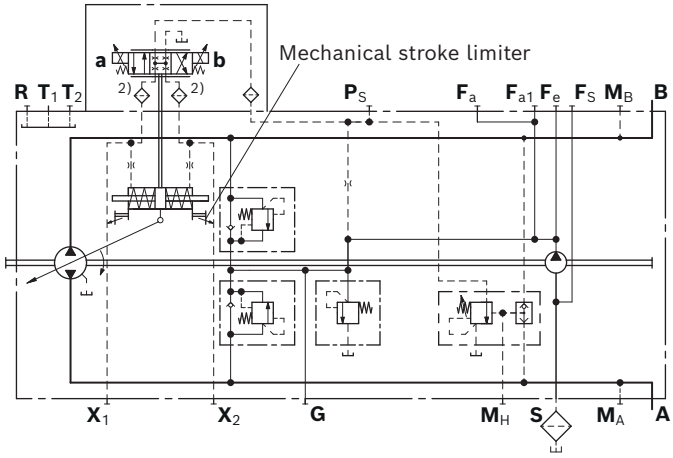

1) Size 28 without port $\mathbf{F}_{a1}$ and $\mathbf{F}_S$
2) Only sizes 28 to 71 are designed with inlet filtration in $\mathbf{X}_1/\mathbf{X}_2$

Stroking chamber pressure port X_3 and X_4

Dimensions

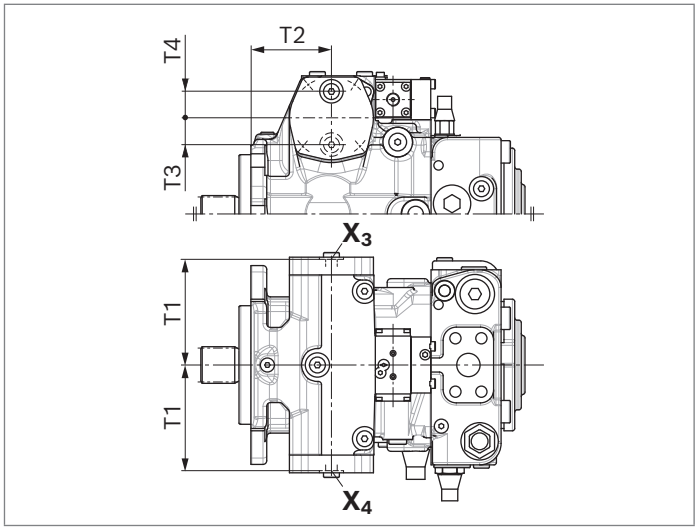

NG	T1	T2	T3	T4
28	92	40.1	–	24
40	92	38.1	–	24
56	104.5	44	–	25
71	113.5	86.3	28	–
90	111.5	95.7	–	30
125	136	104.5	34	–
180	146.5	138.7	–	35

▼ **Circuit diagram**[1)]

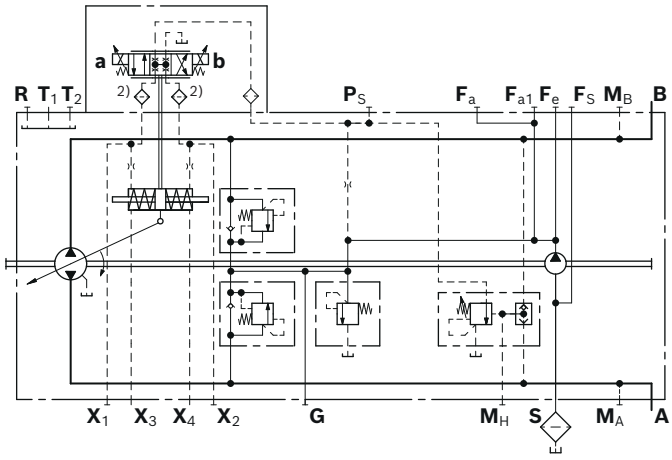

Ports		Standard[3)]	Size	p_{max} [bar][4)]	State[5)]
X_3, X_4	Stroking chamber pressure port	DIN 3852	M12 × 1.5; 12 deep	40	X

1) Size 28 without port F_{a1} and F_S
2) Only sizes 28 to 71 are designed with inlet filtration in X_1/X_2
3) The countersink can be deeper than specified in the standard. Ports designed for straight stud ends according to EN ISO 9974-2 type E.
4) Depending on the application, momentary pressure peaks can occur. Keep this in mind when selecting measuring devices and fittings.
5) X = Plugged (in normal operation)

Measuring ports M_A, M_B, M_H

Working port (port plate) based on DIN 3852

The measuring ports M_A, M_B and M_H are designed based on DIN 3852 and designed for straight stud ends according to EN ISO 9974-2 type E. The countersink may, however, be deeper than specified in the standard.

▼ **Porting pattern (example port plate 02)**

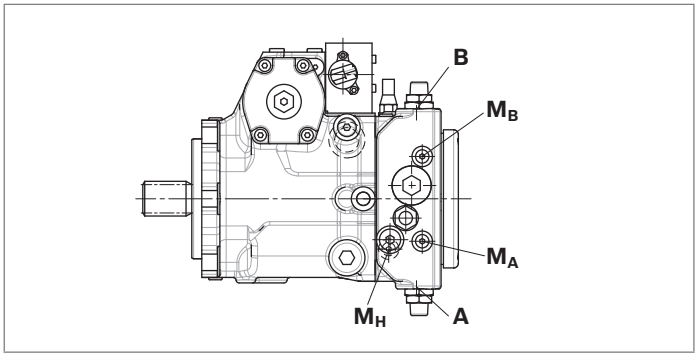

▼ **Countersink of the measuring ports M_A, M_B and M_H**

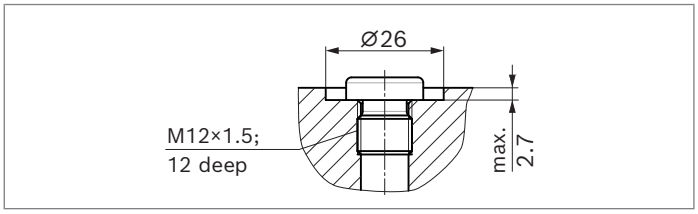

Working port (port plate) based on ISO 6149

The measuring ports M_A, M_B and are designed based on ISO 6149 and designed for straight stud ends according to EN ISO 6149-2. The countersink may, however, be deeper than specified in the standard.

▼ **Porting pattern (example port plate 22)**

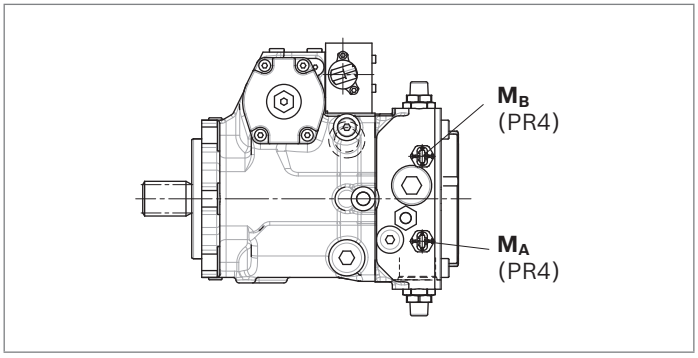

▼ **Countersink of the measuring ports M_A, M_B**

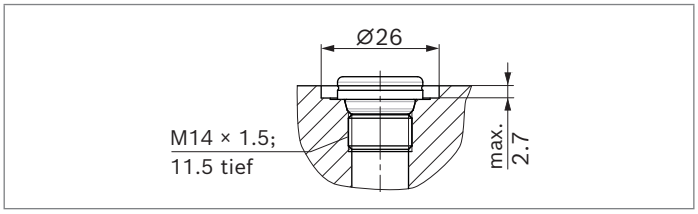

Filtration in the boost pump suction line

Version S

Filter version	Suction filter
Recommendation	With contamination indicator, with bypass
Recommended flow resistance at filter element	
At ν = 30 mm²/s, $n = n_{max}$	Δp = 0.1 bar
At ν = 1000 mm²/s, $n = n_{max}$	Δp = 0.3 bar
Pressure at suction port S	
Continuous $p_{S\ min}$ (ν ≤ 30 mm²/s)	≥0.8 bar absolute
Short-term, at a cold start (t < 3 min)	≥ 0.5 bar absolute
Maximum pressure $p_{S\ max}$	≤ 5 bar absolute

Use of version S is preferred.
The suction filter is not included in the scope of delivery.

▼ **Circuit diagram**[1)]

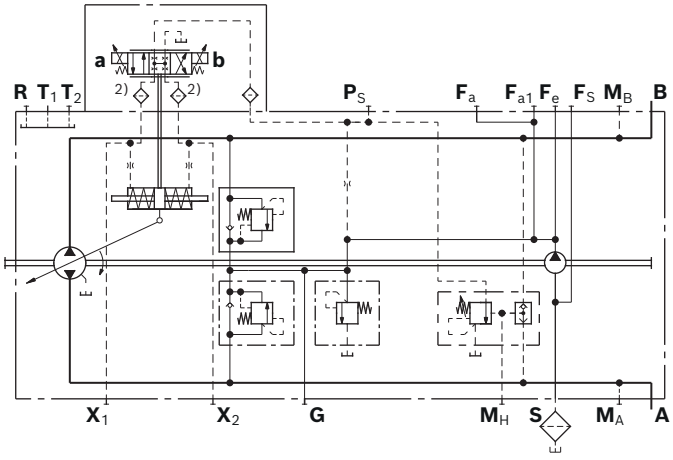

1) Size 28 without port F_{a1} and F_S
2) Only sizes 28 to 71 are designed with inlet filtration in X_1/X_2

Filtration in the boost pump pressure line

Version D

Ports for external boost circuit filtration

Ports	
Boost pressure inlet	Port F_a
Boost pressure outlet	Port F_e
Filter version	**Boost pressure filter**
Recommendation	With contamination indicator, with cold start valve[3]
Filter arrangement	Separate in the pressure line (inline filter)

The boost pressure filter is not included in the scope of delivery.

Notice

- Filters with a bypass are **not recommended**. Please contact us for applications with a bypass.
- On versions with DG control (with pilot pressure not from a boost circuit), a filter must be used that fulfills the requirements with regard to filtration of the hydraulic fluid (see page 7).
- The pressure drop at the filter is viscosity- and contamination-dependent. Note the maximum permissible pressure of the boost pump in combination with the set feed pressure.

▼ **Circuit diagram**[1]

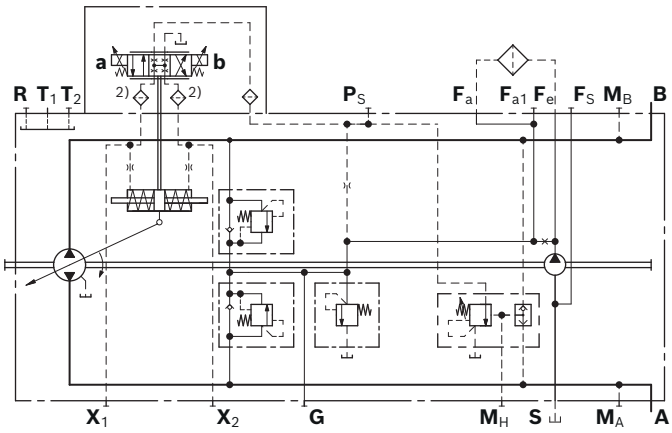

▼ **Dimensions of the countersinks F_e, F_{a1}, F_S**

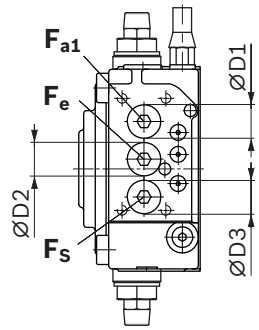

NG	ØD1	ØD2	ØD3
40	$24^{+0.130}_{-0}$	$24^{+0.130}_{-0}$	$24^{+0.130}_{-0}$
56	$24^{+0.130}_{-0}$	$24^{+0.130}_{-0}$	$24^{+0.130}_{-0}$
71	$27.5^{+0.130}_{-0}$	$27.5^{+0.130}_{-0}$	$27.5^{+0.130}_{-0}$
90	$27.5^{+0.130}_{-0}$	$27.5^{+0.130}_{-0}$	$27.5^{+0.130}_{-0}$
125	$40^{+0.160}_{-0}$	$40^{+0.160}_{-0}$	$40^{+0.160}_{-0}$
180	$40^{+0.160}_{-0}$	$40^{+0.160}_{-0}$	$40^{+0.160}_{-0}$

1) Size 28 without port F_{a1} and F_S
2) Only sizes 28 to 71 are designed with inlet filtration in X_1/X_2
3) Sizes 40 to 180, external piping of cold start valve via port F_S required

Version F[1)]

Attachment filter with cold start valve

Filter version	Attachment filter
Recommendation	Version with contamination indicator, see P, B (differential pressure Δp = 5 bar)
Filter grade (absolute)	20 µm
Filter material	Glass fiber
Pressure rating	100 bar
Filter arrangement	Mounted on pump

The attachment filter is equipped with a cold start valve and thereby protects the pump from damage. The valve opens at flow resistance of $\Delta p \geq 6$ bar.

Notice
The pressure drop at the filter is viscosity- and contamination-dependent. Note the maximum permissible pressure of the boost pump in combination with the set feed pressure.

▼ **Filter characteristic curve**

Differential pressure/flow behavior according to ISO 3968 (valid for non-contaminated filter element).

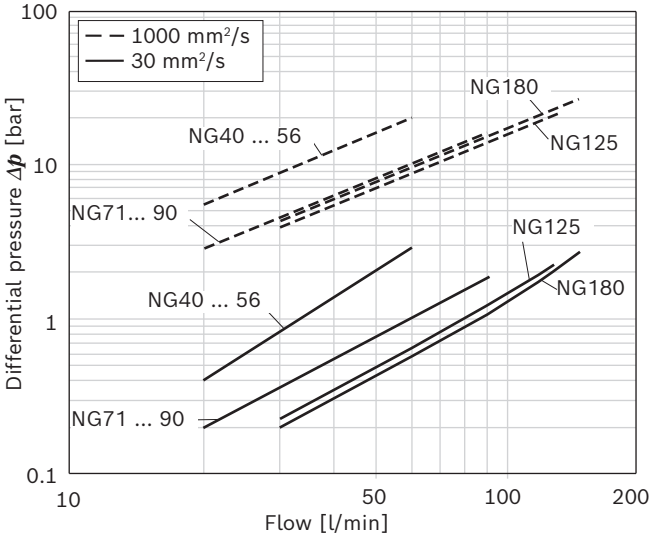

▼ **Circuit diagram**

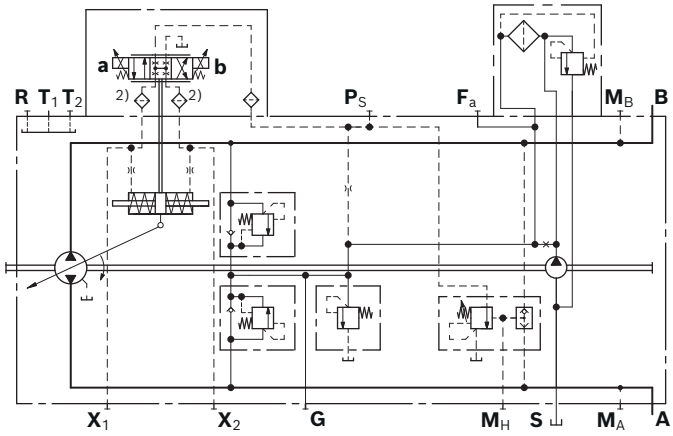

▼ **Dimensions**

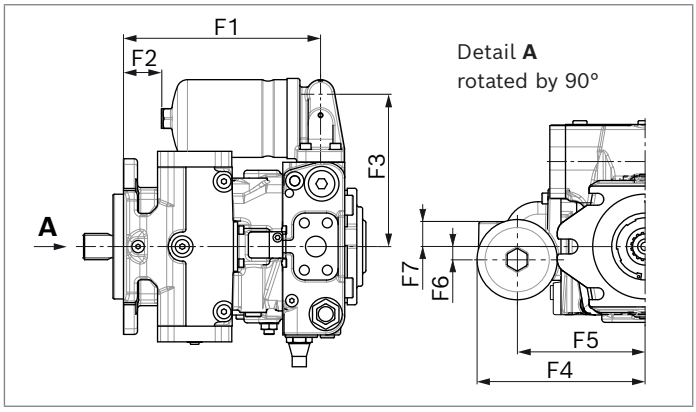

NG	F1	F2	F3	F4	F5	F6	F7
40	201.7	47.7	160	175	135	0	42
56	218.4	64.4	163	178	138	0	42
71	239	46.5	185	203.5	155	16	29
90	248.5	56	179	197.5	149	0	45
125	235.9	59.4	201	219.5	171	0	53
180	279.9	40.3	202	220.4	171.9	17	36

1) To protect the filter element against electrostatic charge buildup, the hydraulic fluid must have a minimum conductivity of 300 pS/m on versions with attachment filter F, P and B. Please contact us if this value cannot be observed.
2) Only sizes 40 to 71 are designed with inlet filtration in $\mathbf{X}_1/\mathbf{X}_2$

Version P[1)]

Attachment filter with cold start valve and visual contamination indicator

Filtration similar to version F, however with additional visual contamination indicator.

Technical data	
Display type	Green/red window
Differential pressure (switching pressure)	Δp = 5 bar

▼ **Circuit diagram**

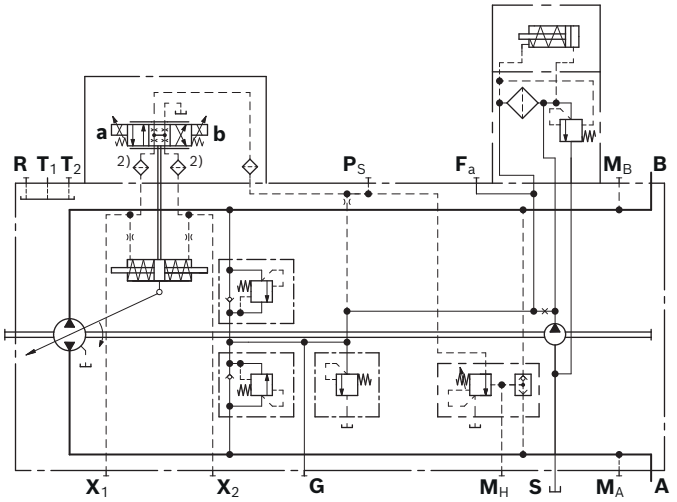

▼ **Dimensions**

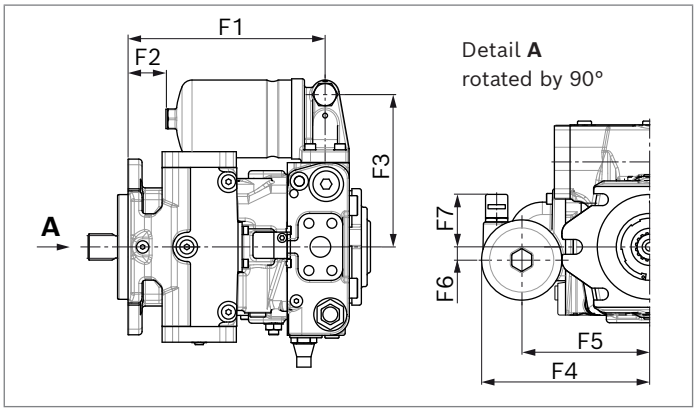

NG	F1	F2	F3	F4	F5	F6	F7
40	201.7	47.7	160	175	135	0	78.5
56	218.4	64.4	163	178	138	0	78.5
71	239	46.5	185	203.5	155	16	65.5
90	248.5	56	179	197.5	149	0	81.5
125	235.9	59.4	201	219.5	171	0	89.5
180	279.9	40.3	202	220.4	171.9	17	72.5

1) To protect the filter element against electrostatic charge buildup, the hydraulic fluid must have a minimum conductivity of 300 pS/m on versions with attachment filter F, P and B. Please contact us if this value cannot be observed.

2) Only sizes 40 to 71 are designed with inlet filtration in $\mathbf{X_1}$/$\mathbf{X_2}$

Version B[1)]

Attachment filter with cold start valve and electric contamination indicator

Filtration similar to version F, however with additional electric contamination indicator.

Technical data		
Display type	Electric	
Connector version (mating connector, see page 94)	DEUTSCH DT04-2P-EP04	
Differential pressure (switching pressure)	Δp = 5 bar	
Maximum switching capacity	12 V DC	24 W
	24 V DC	48 W
Type of protection IP67	DIN/EN 60529	

▼ **Circuit diagram**

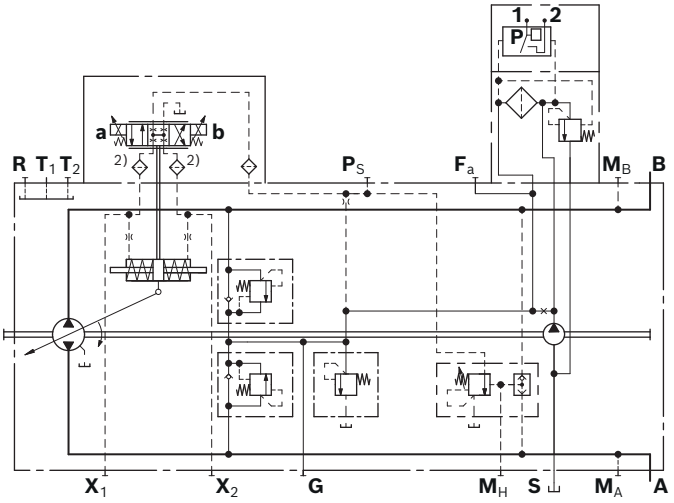

▼ **Dimensions**

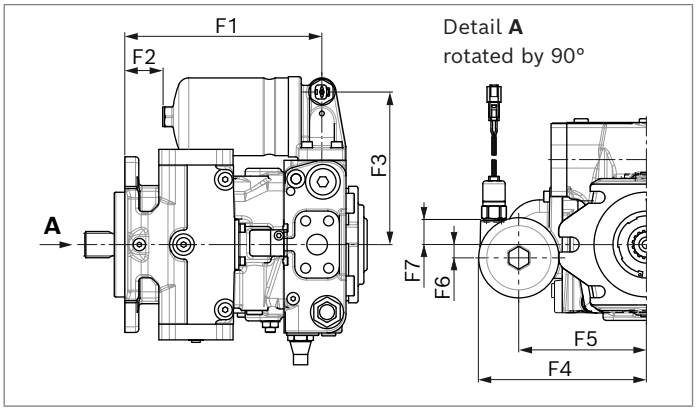

NG	F1	F2	F3	F4	F5	F6	F7
40	201.7	47.7	160	175	135	0	42
56	218.4	64.4	163	178	138	0	42
71	239	46.5	185	203.5	155	16	29
90	248.5	56	179	197.5	149	0	45
125	235.9	59.4	201	219.5	171	0	53
180	279.9	40.3	202	220.4	171.9	17	36

External boost pressure supply

Version E

This variation should be used in versions without integrated boost pump (**N** and/or **K**).
Port **S** is plugged.
The boost pressure supply comes from port $\mathbf{F}_a$.
The filter should be installed separately on port $\mathbf{F}_a$ before the boost pressure supply.
To ensure the functional reliability, maintain the required cleanliness level for the boost fluid fed in at port $\mathbf{F}_a$ (see page 7).

▼ **Circuit diagram**[1)]

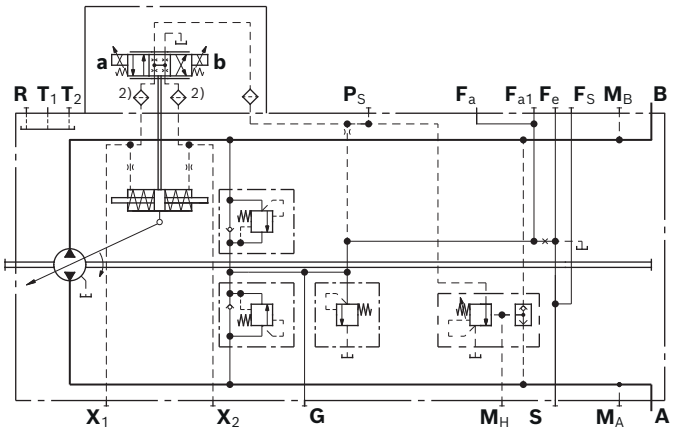

1) Size 28 without port $\mathbf{F}_{a1}$ and $\mathbf{F}_S$
2) Only sizes 28 to 71 are designed with inlet filtration in $\mathbf{X}_1/\mathbf{X}_2$

Connector for solenoids

DEUTSCH DT04-2P-EP04

- **P**: Molded, 2-pin, without bidirectional suppressor diode (standard).
- **Q**: Molded, 2-pin, with bidirectional suppressor diode (only for switching solenoids on control module EZ and DA)

The following type of protection ensues with the installed mating connector:

- IP67 (DIN/EN 60529) and
- IP69K (DIN 40050-9)

The protection circuit with bidirectional suppressor diode is needed to limit overvoltages. Overvoltages are caused by switching off the current with switches, relay contacts or by diskonnecting the mating connector while voltage is applied.

▼ **Switching symbol**

Without bidirectional suppressor diode	**With** bidirectional suppressor diode
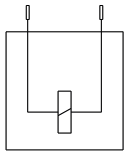	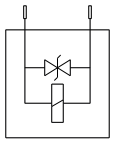

▼ **Mating connector DEUTSCH DT06-2S-EP04**

Consisting of	DT designation
1 housing	DT06-2S-EP04
1 wedge	W2S
2 sockets	0462-201-16141

The mating connector is not included in the scope of delivery. This can be supplied by Bosch Rexroth on request (material number R902601804).

Notice

- If necessary, you can change the position of the connector by turning the solenoid.
- The procedure is defined in the instruction manual.

Rotary inch valve

The rotary inch valve allows for any reduction of pilot pressure, independently of drive speed, through mechanical actuation of the control lever. The control lever is equipped with an internal rotational limiter ±90° (drawing item **1** and **2**).
The valve is arranged separately from the pump and is connected to the pump by a hydraulic control line via port **P**$_S$ (maximum line length: approx. 2 m).
The rotary inch valve must be ordered separately.

NG	Material number	Direction of actuation of the control lever	Throttle cross-section Ø
28, 40, 56, 71, 90	R902048734	Clockwise	4.6
	R902048735	Counter-clockwise	4.6
	R902070172	Clockwise	2.7
	R902066994	Counter-clockwise	2.7
125	R902048740	Clockwise	4.7
	R902048741	Counter-clockwise	4.7

Notice
The rotary inch valve can be used regardless of the control module. If necessary, the position of the control lever can be changed.

▼ **Circuit diagram**
Hydraulic control, speed related
DA with separately attached rotary inch valve

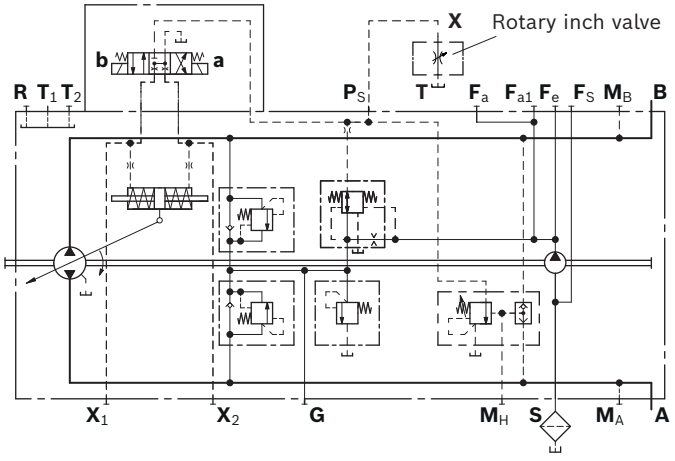

Dimensions

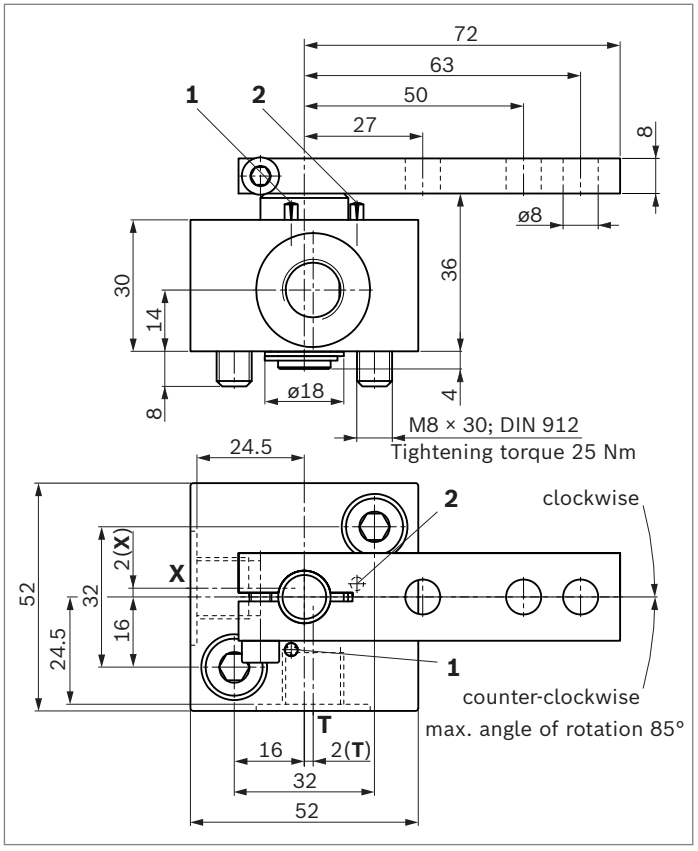

Notice
To prevent damage to the rotary inch valve, a positive mechanical stop of ±85° must be provided for the control lever on the customer side.

Ports		Standard[1]	Size	p_{max} [bar][2]	State[3]
X	Pilot pressure port	DIN 3852	M14 x 1.5; 12 deep	40	O
T	Drain port	DIN 3852	M14 x 1.5; 12 deep	3	O

1) The countersink may be deeper than specified in the standard. Ports designed for straight stud ends according to EN ISO 9974-2 type E.
2) Depending on the application, momentary pressure peaks can occur. Keep this in mind when selecting measuring devices and fittings.
3) O = Must be connected (plugged on delivery)

Installation dimensions for coupling assembly

To ensure that rotating components (coupling hub) and fixed components (housing, retaining ring) do not come into contact with each other, the installation conditions described here must be observed. This depends on the pump size and the splined shaft.

SAE splined shaft (spline according to ANSI B92.1a)
Splined shaft **S** and/or **T**
The outer diameter of the coupling hub must be smaller than the inner diameter of the retaining ring (dimension d_2) in the area near the drive shaft collar (dimension $x_2 - x_3$).
Observe diameter of relief on sizes 28 and 40.

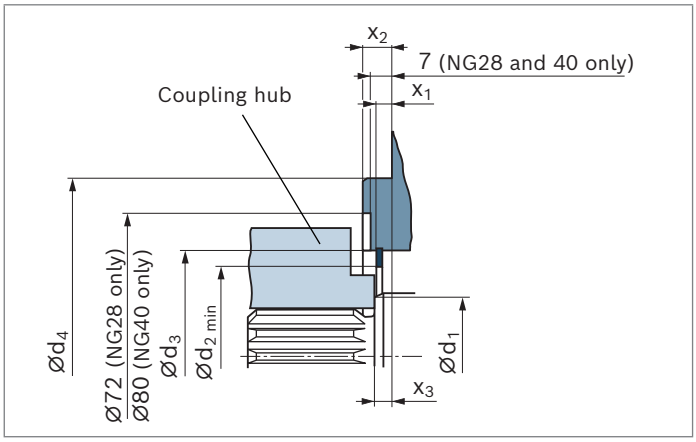

DIN splined shaft (spline according to DIN 5480)
Splined shaft **Z** or **A**
The outer diameter of the coupling hub must be smaller than the case diameter d_3 in the area near the drive shaft collar (dimension $x_2 - x_4$).
Observe diameter of relief on sizes 28 and 40.

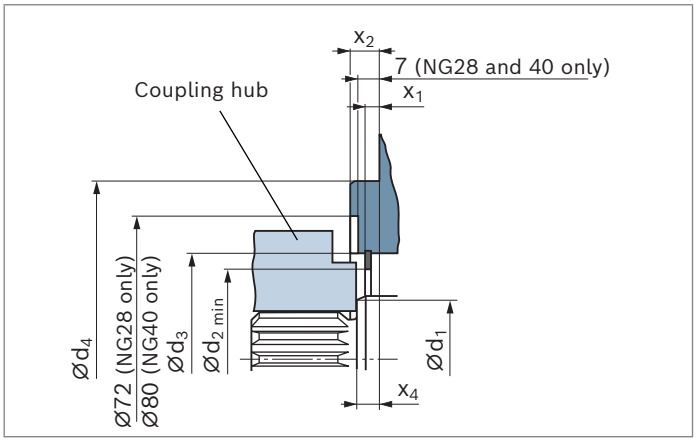

NG	Ød$_1$ SAE splined shaft	Ød$_1$ DIN splined shaft	Ød$_{2\,min}$	Ød$_3$	Ød$_4$	x$_1$	x$_2$	x$_3$	x$_4$
28	33.5	32.1	43.4	55±0.1	101.6 $^{0}_{-0.054}$	3.3+0.2	9.5−0.5	8 $^{+0.9}_{-0.6}$	10 $^{+0.9}_{-0.6}$
40	38.5	37.1	51.4	63±0.1	127 $^{0}_{-0.063}$	4.3+0.2	12.7−0.5	8 $^{+0.9}_{-0.6}$	10 $^{+0.9}_{-0.6}$
56	38.5	37.1	54.4	68±0.1	127 $^{0}_{-0.063}$	7.0+0.2	12.7−0.5	8 $^{+0.9}_{-0.6}$	10 $^{+0.9}_{-0.6}$
71	43.5	42.1	66.5	81±0.1	127 $^{0}_{-0.063}$	7.0+0.2	12.7−0.5	8 $^{+0.9}_{-0.6}$	10 $^{+0.9}_{-0.6}$
90	48.5	47.1	66.5	81±0.1	152.4 $^{0}_{-0.063}$	6.8+0.2	12.7−0.5	8 $^{+0.9}_{-0.6}$	10 $^{+0.9}_{-0.6}$
125	53.5	52.1	76.3	91±0.1	152.4 $^{0}_{-0.063}$	7.0+0.2	12.7−0.5	8 $^{+0.9}_{-0.6}$	10 $^{+0.9}_{-0.6}$
180	58.5	57.1	88	107±0.1	165.1 $^{0}_{-0.063}$	7.4+0.2	15.9−0.5	8 $^{+0.9}_{-0.6}$	10 $^{+0.9}_{-0.6}$

Installation instructions

General

The axial piston unit must be filled with hydraulic fluid and air bled during commissioning and operation. This must also be observed following a longer standstill as the axial piston unit may empty via the hydraulic lines.
Particularly in the installation position "drive shaft upwards", filling and air bleeding must be carried out completely as there is, for example, a danger of dry running.
The leakage in the housing area must be directed to the reservoir via the highest drain port (**T**$_1$, **T**$_2$). For combination pumps, the leakage must be drained off at each single pump.
If a shared drain line is used for several units, make sure that the respective case pressure in each unit is not exceeded. The shared drain line must be dimensioned to ensure that the maximum permissible case pressure of all connected units is not exceeded in any operating condition, particularly at cold start. If this is not possible, separate drain lines must be laid.
To prevent the transmission of structure-borne noise, use elastic elements to decouple all connecting lines from all vibration-capable components (e.g. reservoir, frame parts).
Under all operating conditions, the suction line and drain line must flow into the reservoir below the minimum fluid level. The permissible suction height h_S results from the total pressure loss; it must not, however, be higher than $h_{S\ max}$ = 800 mm.
The suction pressure at port **S** must also not fall below the minimum value of 0.8 bar absolute during operation (cold start 0.5 bar absolute).
When designing the reservoir, ensure that there is adequate distance between the suction line and the drain line.
We recommend using a baffle (baffle plate) between suction line and drain line. A baffle improves the air separation ability as it gives the hydraulic fluid more time for desorption. Apart from that, this prevents the heated return flow from being drawn directly back into the suction line. The suction port must be supplied with air-free, calmed and cooled hydraulic fluid.

Installation position

See the following examples 1 to 12.
Further installation positions are available upon request.
Recommended installation position: 1 and 2.

Notice

- Size 71 to 180
  With the "drive shaft upwards" installation position, an **R**$_1$ port is necessary (special version).
- For optimum function and dynamics of the axial piston unit, a complete filling of the two stroking chambers **X**$_1$ and **X**$_2$ with hydraulic fluid is required. By swiveling the swashplate several times during commissioning, this can usually be be ensured. In case of unfavorable installation positions, air bleeding of the stroking chambers may take some time, so we recommend filling the stroking chambers via ports **X**$_1$ and **X**$_2$ before installation.
- In certain installation positions, an influence on the adjustment or control can be expected. Gravity, dead weight and case pressure can cause minor characteristic shifts and changes in response time.

Key	
R	Air bleed port
R$_1$	Air bleed port (special version)
S	Suction port
G	Boost pressure port inlet
T$_1$, **T**$_2$	Drain port
SB	Baffle (baffle plate)
$h_{t\ min}$	Minimum required immersion depth 7.87 in (200 mm)
h_{min}	Minimum required distance to reservoir bottom 3.94 in (100 mm)
$h_{S\ max}$	Maximum permissible suction height 31.5 in (800 mm)

Below-reservoir installation (standard)

Below-reservoir installation means that the axial piston unit is installed outside of the reservoir below the minimum fluid level of the reservoir.

▼ Installation position 1

Air bleed the housing	Filling
R	**G**[1], **S**

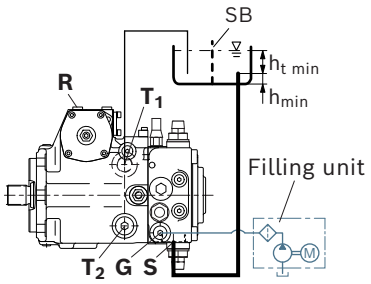

▼ Installation position 2

Air bleed the housing	Filling
T_2	**G**[1], **S**

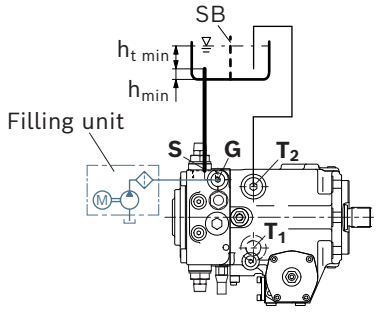

▼ Installation position 3

Air bleed the housing	Filling
T_2	**G**[1], **S**

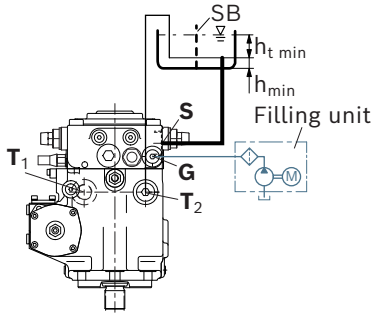

▼ Installation position 4

Air bleed the housing	Filling
R_1	**G**[1], **S**

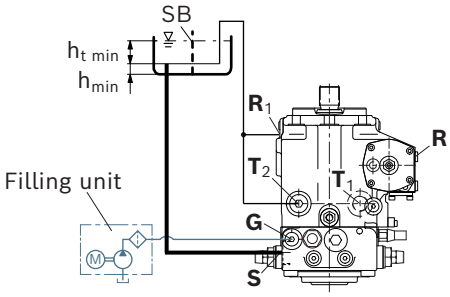

▼ Installation position 5

Air bleed the housing	Filling
T_1	**G**[1], **S**

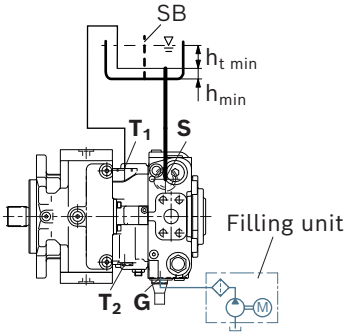

▼ Installation position 6

Air bleed the housing	Filling
T_2	**G**[1], **S**

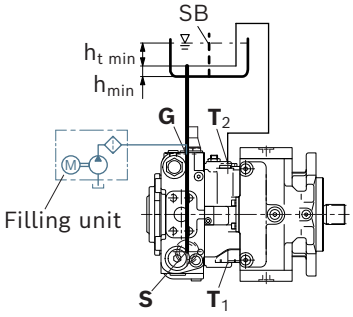

1) Recommendation: Filling with filling unit.
When filling without filling unit, the pump must be filled at the highest drain port.

Above-reservoir installation

Above-reservoir installation means that the axial piston unit is installed above the minimum fluid level of the reservoir.

Observe the maximum permissible suction height $h_{S\ max}$ = 31.50 in (800 mm).

Recommendation for installation position 10 (drive shaft upward): A check valve in the drain line (cracking pressure 7.5 psi (0.5 bar)) can prevent the housing area from draining.

▼ **Installation position 7**

Air bleed the housing	Filling
R	**G**[1], **S**

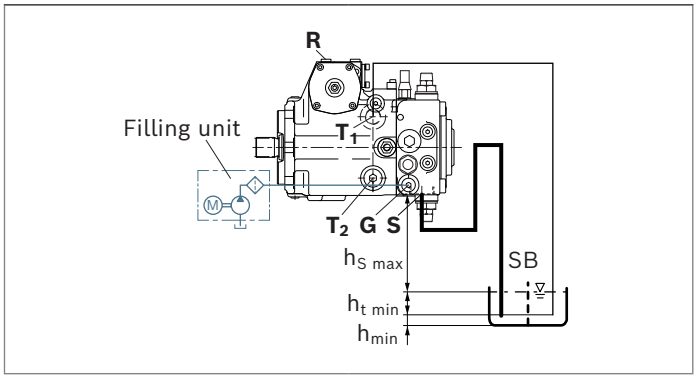

▼ **Installation position 8**

Air bleed the housing	Filling
T2	**G**[1], **S**

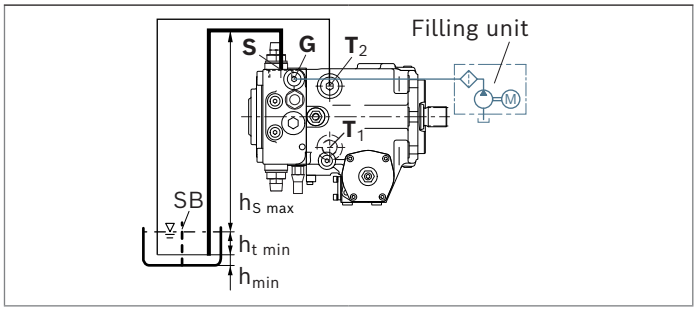

▼ **Installation position 9**

Air bleed the housing	Filling
T2	**G**[1], **S**

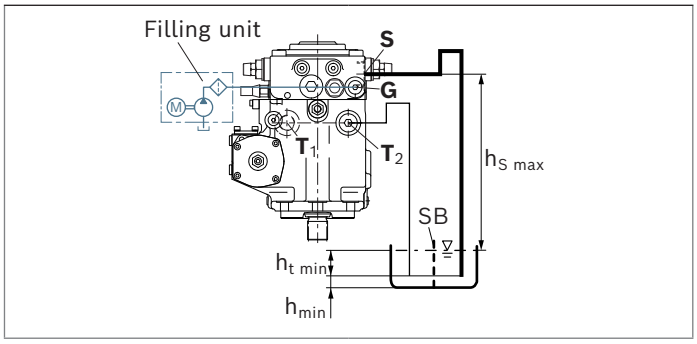

▼ **Installation position 10**

Air bleed the housing	Filling
R1	**G**, **S**

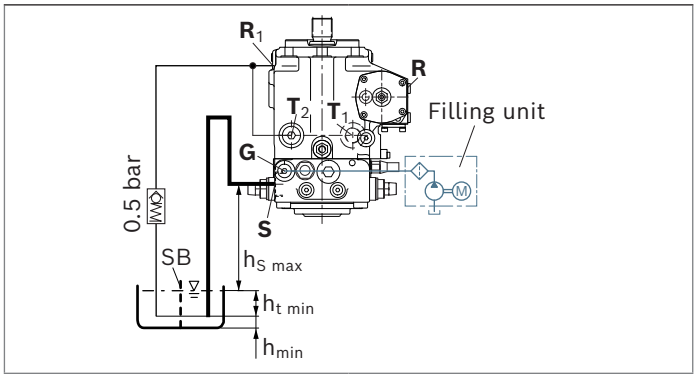

▼ **Installation position 11**

Air bleed the housing	Filling
T1	**G**[1], **S**

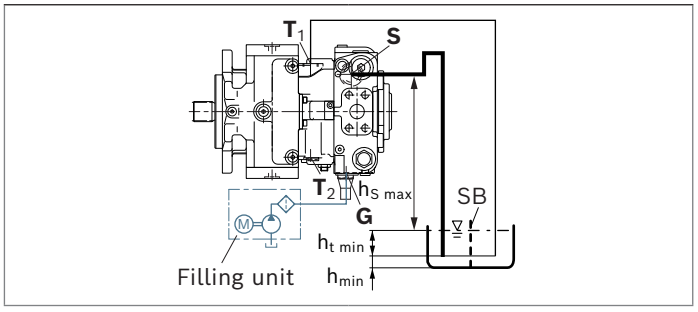

▼ **Installation position 12**

Air bleed the housing	Filling
T2	**G**[1], **S**

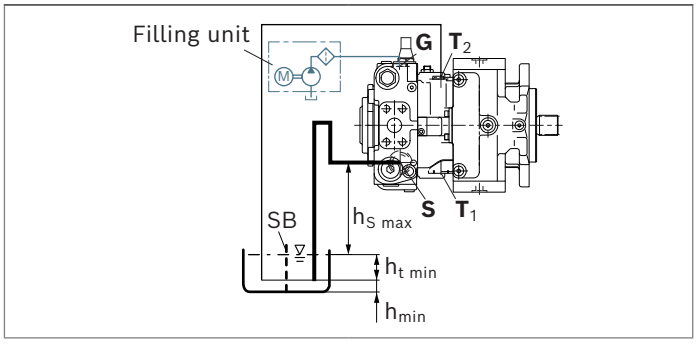

1) Recommendation: Filling with filling unit.
When filling without filling unit, the pump must be filled at the highest drain port.

Project planning notes

- The pump is designed to be used in a closed circuit.
- The project planning, installation and commissioning of the axial piston unit requires the involvement of skilled personnel.
- Before using the axial piston unit, please read the corresponding instruction manual completely and thoroughly. If necessary, this can be requested from Bosch Rexroth.
- Before finalizing your design, please request a binding installation drawing.
- The specified data and notes contained herein must be observed.
- Depending on the operating conditions of the axial piston unit (working pressure, fluid temperature), the characteristic curve may shift.
- Preservation: Our axial piston units are supplied as standard with preservation protection for a maximum of 12 months. If longer preservation protection is required (maximum 24 months), please specify this in plain text when placing your order. The preservation periods apply under optimal storage conditions, details of which can be found in the data sheet 90312 or the instruction manual.
- Not all versions of the product are approved for use in a safety function according to ISO 13849. Please consult the responsible contact person at Bosch Rexroth if you require reliability parameters (e.g. $MTTF_D$) for functional safety.
- Depending on the type of control used, electromagnetic effects can be produced when using solenoids. Applying a direct voltage signal (DC) to solenoids does not create electromagnetic interference (EMI) nor is the solenoid affected by EMI. Electromagnetic interference (EMI) potential exists when operating and controlling a solenoid with a modulated direct voltage signal (e.g. PWM signal) Appropriate testing and measures should be taken by the machine manufacturer to ensure other components or operators (e.g. with pacemaker) are not affected by this potential.
- Pressure cut-off (hydraulic or electronic) is not a sufficient safeguard against pressure overload. Therefore, a pressure relief valve must be added to the hydraulic system (integrated in the pump or external in the system).Observe the technical limits of the pressure relief valves here.
- With dynamic power flow (change of pumps to operation as a motor) a maximum of 95% $V_{g\ max}$ is permissible. We recommend configuring the software accordingly.
- Please note that a hydraulic system is an oscillating system. This can lead, for example, to the stimulation the natural frequency within the hydraulic system during operation at constant rotational speed over a long period of time. The stimulator frequency of the pump is 9 times the rotational speed frequency. This can be prevented, for example, with suitably designed hydraulic lines.
- Please note the details regarding the tightening torques of port threads and other threaded joints in the instruction manual.
- The ports and fastening threads are designed for the p_{max} permissible pressures of the respective ports, see the connection tables. The machine or system manufacturer must ensure that the connecting elements and lines correspond to the specified application conditions (pressure, flow, hydraulic fluid, temperature) with the necessary safety factors.
- The service ports and function ports are only intended to accommodate hydraulic lines.

Safety instructions

- During and shortly after operation, there is a risk of burns on the axial piston unit and especially on the solenoids. Take the appropriate safety measures (e.g. by wearing protective clothing).
- Moving parts in control equipment (e.g. valve spools) can, under certain circumstances, get stuck in position as a result of contamination (e.g. contaminated hydraulic fluid, abrasion, or residual dirt from components). As a result, the hydraulic fluid flow and the build-up of torque in the axial piston unit can no longer respond correctly to the operator's specifications. Even the use of various filter elements (external or internal flow filtration) will not rule out a fault but merely reduce the risk.
  The machine/system manufacturer should test whether additional measures are required on the machine for the relevant application in order to bring the driven consumer into a safe position (e.g., safe stop) and make sure any measures are properly implemented.
- Moving parts in high-pressure relief valves may in certain circumstances become stuck in an undefined position due to contamination (e.g. impure hydraulic fluid). This can result in restriction or loss of load-holding functions in lifting winches.
  The machine/system manufacturer must check whether additional measures are required on the machine for the relevant application in order to keep the load in a safe position and ensure they are properly implemented.