Axial piston variable pump
A7VK Series 10
Metering pump for polyurethane components

RE 94010
Edition: 04.2013
Replaces: 03.2009

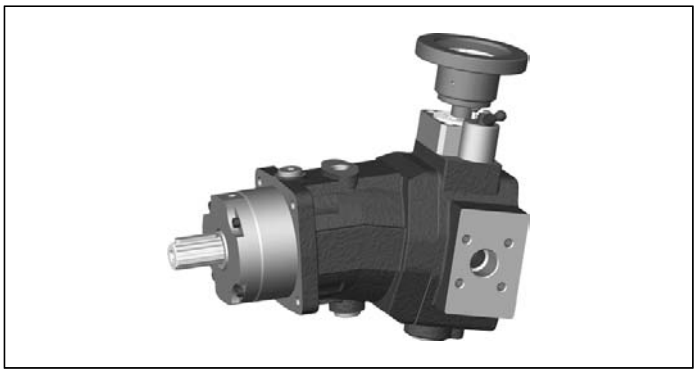

- Sizes 12, 28, 55, 107
- Nominal pressure 250 bar
- Maximum pressure 315 bar
- Open and closed design

Features

- Compact design
- Reduced dimensions and mass in comparison to A2VK
- Mounting flange, drive shaft and functions identical to A2VK, thus easy to replace
- Increased corrosion protection through special surface treatment
- Manual adjustment with prescision display and clamp unit to prevent accidental adjustment
- Double shaft sealing made of special material and flushing chamber to identify damage and protect environment
- Improved volumetric efficiency through robust rotary group using proven axial tapered piston technology
- Optionally available with mounted high-pressure relief valve
- Low noise level

Closed design (A7VKG)

- High permissible filling pressure for highly-viscous media or hydraulic fluid by separating the filling channel and pump housing
- Case drain fluid must be discharged

Open design (A7VKO)

- The housing is connected to the suction chamber. A case drain line between the housing and reservoir is not requires

Note

The axial piston pump is approved for pumping polyurethane components (polyol and isocynate).

Inhalt

Ordering code	2
Operating pressure range	3
Hydraulic fluids	4
Technical data	4
MA control	5
Dimensions size 12 – open design	6
Dimensions size 12 – closed design	8
Dimensions size 28 – open design	10
Dimensions size 28 – closed design	12
Dimensions size 55 – open design	14
Dimensions size 55 – closed design	16
Dimensions size 107 – open design	18
Dimensions size 107 – closed design	20
High-pressure relief valve direct operated	22
Installation instructions	23
General instructions	24

Ordering code

01	02	03	04		05	06	07	08	09	10	11	12		13
A7VK			**MA**	**/**	**10**	**M**		**S**			**5**		**–**	

Axial piston unit

01	Variable bent-axis design, nominal pressure 250 bar, maximum pressure 315 bar	**A7VK**

Operation modes

02	Pump, closed design	**G**
	Pump, open design	**O**

Sizes (NG)

03	Geometric displacement, see table of values on page 4	**012**	**028**	**055**	**107**

Control device

04	Control, manual with handwheel	**MA**

Series

05	Series 1, index 0	**10**

Version of port and fixing threads

06	Metric, port threads with profile sealing ring according to DIN 3852	**M**

Directions of rotation

07	Viewed from drive shaft	clockwise (standard)	**R**
		counter-clockwise (option)	**L**

Seals

08	FKM (fluor-caoutchouc), shaft seal in PTFE (polytetrafluor ethylene)	**S**

Mounting flanges

			012	**028**	**055**	**107**	
09	Similar to ISO 3019-2 – 4-bolt (can be changed to A2VK)	80-4	●	–	–	–	**KG**
		100-4	–	●	–	–	**LG**
		125-4	–	–	●	–	**MS**
		160-4	–	–	–	●	**PS**

Drive shafts

			012	**028**	**055**	**107**	
10	Parallel keyed shaft according to DIN 6885	ø20	●	–	–	–	**P3**
		ø25	–	●	–	–	**P5**
		ø30	–	–	●	–	**P6**
		ø40	–	–	–	●	**P9**

Service line ports

11	Closed design: threaded ports A and B, at side, opposite side	**5**
	Open design: threaded ports A and S, at side, opposite side	

Pressure relief valves

12	Without pressure relief valves (standard)		**0000**
	High-pressure relief valve, diret controlled, fixed setting, Δp-setting value [bar] optional	100	**A100**
		150	**A150**
		200	**A200**
		230	**A230**
		250	**A250**

Standard / special version

13	Standard version	**0**
	Special version	**S**

● = Available ○ = On request – = Not available

Operating pressure range

Pressure at the service line ports A or B (high-pressure side)		**Definition**
Nominal pressure p_{nom}	250 bar absolute	The nominal pressure corresponds to the maximum design pressure.
Maximum pressure p_{max}	315 bar absolute	The maximum pressure corresponds to the maximum operating pressure within the single operating period. The sum of the single operating periods must not exceed the total operating period.
Single operating period	10 s	
Total operating period	50 h	
Minimum pressure	10 bar absolute	Minimum pressure on the high-pressure side (**A** or **B**) that is required in order to prevent damage to the axial piston unit.
Rate of pressure change $R_{A\ max}$	9000 bar/s	Maximum permissible rate of pressure build-up and pressure reduction during a pressure change over the entire pressure range.
Closed design **Pressure at the service line ports A or B (low-pressure side)**		
Minimum filling pressure	> 1 bar absolute	Depending on viscosity and flow, the filling pressure must be adjusted in such a way that a complete filling of the low pressure side of the pump is ensured.
Maximum filling pressure	30 bar absolute	
Open design **Pressure on suction port S (inlet)**		
Minimum filling pressure	1 bar absolute	Depending on viscosity and flow, the filling pressure must be adjusted in such a way that a complete filling of the low pressure side of the pump is ensured.
Maximum filling pressure	6 bar absolute	

▼ **Rate of pressure change $R_{A\ max}$**

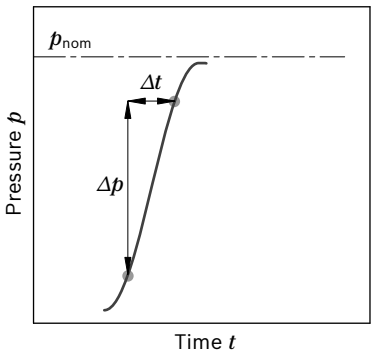

▼ **Pressure definition**

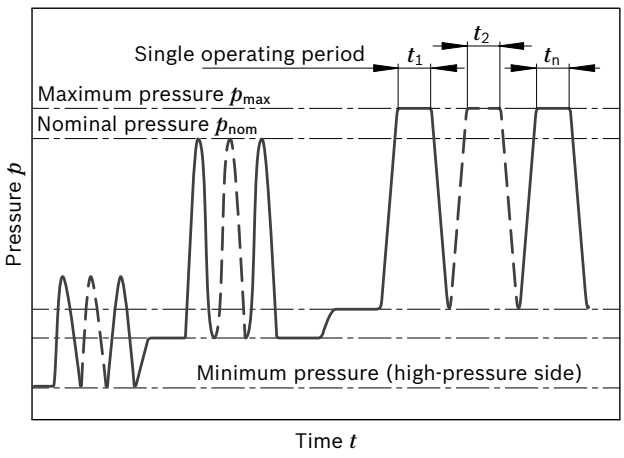

Total operating period = $t_1 + t_2 + ... + t_n$

Note
Values for other hydraulic fluids, please contact us.

Shaft seal

Permissible pressure loading
The service life of the shaft seal is affected by the speed of the pump, the case pressure (case drain pressure) and the properties of the medium being pumped. Momentary (t < 0.1 s) pressure spikes of up to 10 bar absolute are permitted. The service life of the shaft seal decreases with an increase in the frequency of pressure spikes.

Note
For monitoring the shaft seal for zero leakage, we recommend connecting a barrier fluid monitor at ports **U_1** to **U_4**.

The minimum case pressure must be equal to or greater than the barrier fluid pressure. The barrier fluid pressure must be equal to or greater than the external pressure on the outer shaft seal.

Hydraulic fluids

The pump is approved for pumping and metering polyurethane components (polyol and isocynate). For other hydraulic fluids, consult with Bosch Rexroth Service.

Operating viscosity range

The limiting values for viscosity are as follows:

- ν_{min} = 5 mm²/s
- ν_{max} = 1600 mm²/s

Please contact us if different values are required.
On applications with highly viscous fluids bearing flushing is recommended. Recommended flushing flow:

Size	[L/min]
12	2.5
28	4
55	4
107	8

Operating temperature range

- Optimum operating temperature range t = 10 bis 50 °C
- Maximum operating temperature range t_{max} = 80 °C

The permissible operating temperature is dependent on the lubricity of the respective hydraulic fluid.
The maximum operating temperature must not be exceeded even locally.

Filtration of the hydraulic fluid

The filter should be arranged so that only filtered fluid enters the pump. The finer the filter, the longer the service life of the axial piston pump.

- We recommend a filter grade $\eta_{abs} \leq 125$ µm

Case drain fluid at closed design

The pump ports **A** and **B** are separated from the housing. The case drain fluid must be removed via port $\mathbf{T_1}$ or $\mathbf{T_2}$ using a separate line.

- Maximum case drain pressure $p_{L\ max}$ = 6 bar

Case drain fluid at open design

The housing is connected to the suction chamber. The pressure on port **S** is also applied in the housing and must not exceed 6 bar. A case drain line between the housing and reservoir is not required (port $\mathbf{T_1}$, $\mathbf{T_2}$ plugged).

Technical data

Size			NG		12	28	55	107
Displacement geometrical, per revolution			$V_{g\ max}$	cm³	11.6	28.1	54.8	107
			$V_{g\ min}$	cm³	0	0	0	0
Flow	at $V_{g\ max}$ and speed n	n = 1500 min⁻¹	q_v	L/min	17.4	42.2	82.2	160.5
		n = 1800 min⁻¹	q_v	L/min	20.9	50.6	98.6	192.6
Power	at $V_{g\ max}$, Δp = 250 bar and speed n	n = 1500 min⁻¹	P	kW	7.3	17.6	34.2	66.9
		n = 1800 min⁻¹	P	kW	8.7	21.1	41.1	80.3
Torque	at $V_{g\ max}$ and Δp = 250 bar		T	Nm	46.2	111.8	218.0	425.7
Mass (approx.)			m	kg	11.7	22.1	31	55

Determining the operating characteristics

Formulas		
Flow	$q_v = \frac{V_g \cdot n \cdot \eta_v}{1000}$	[L/min]
Torque	$T = \frac{V_g \cdot \Delta p}{20 \cdot \pi \cdot \eta_{mh}}$	[Nm]
Power	$P = \frac{2\pi \cdot T \cdot n}{60000} = \frac{q_v \cdot \Delta p}{600 \cdot \eta_t}$	[kW]

Key		
V_g	=	Displacement per revolution in cm³
Δp	=	Differential pressure in bar
n	=	Speed in min⁻¹
η_v	=	Volumetric efficiency
η_{mh}	=	Mechanical-hydraulic efficiency
η_t	=	Total efficiency ($\eta_t = \eta_v \cdot \eta_{mh}$)

Note
Theoretical values, without efficiency and tolerances; values rounded

MA control

Turning the handwheel turns a threaded spindle which steplessly adjusts the pump's rotary group, and thus the flow in the range from $V_{g\,min}$ to $V_{g\,max}$. A manual locking device, which is fitted as standard equipment, prevents unintentional adjustment. The precision adjustment display is integrated in the handwheel.

Size		12	28	55	107
Rotation on the handwheel $V_{g\,min}$ to $V_{g\,max}$	approx. U_s	23	30	40	50
Maximum torque in the handwheel T_{max}	approx. Nm	3.5	3.5	3.5	3.5

Flow direction

Direction of rotation, viewed from drive shaft		
Design	**clockwise**	**counter-clockwise**
Closed	**A** to **B**	**B** to **A**
Open	**S** to **A**	**S** to **A**

Closed design

▼ **Schematic clockwise**

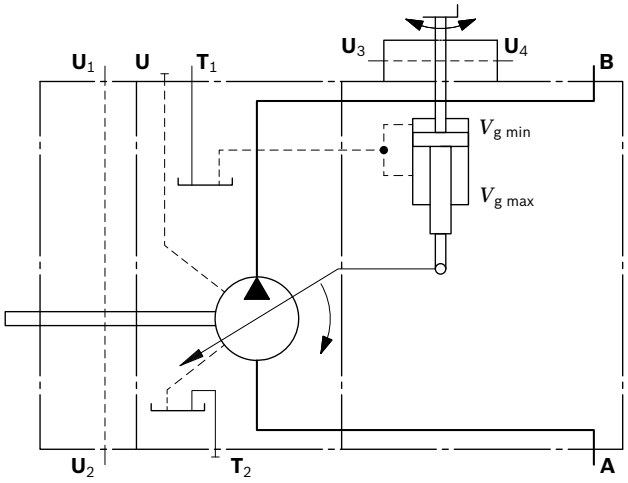

▼ **Schematic counter-clockwise**

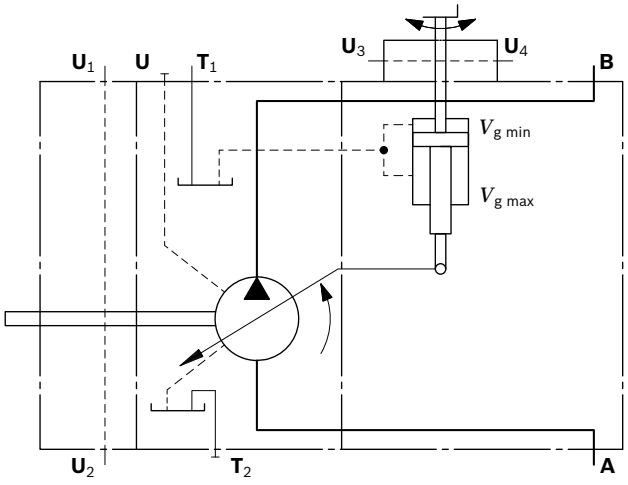

Open design

▼ **Schematic clockwise**

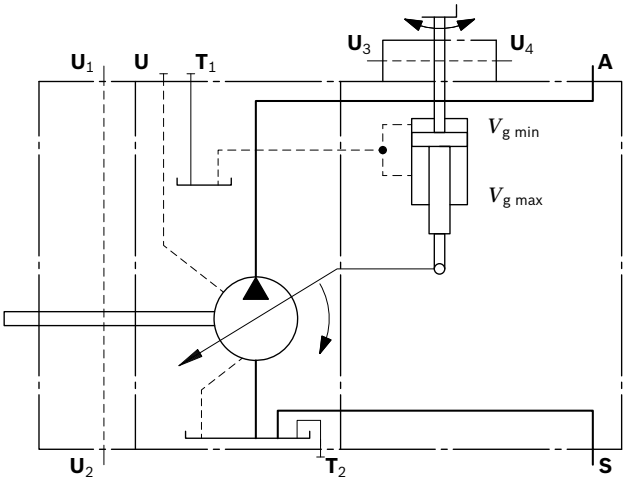

▼ **Schematic counter-clockwise**

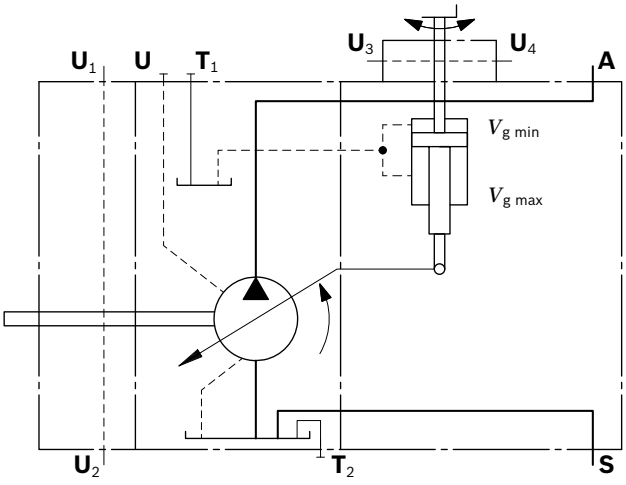

Dimensions size 12 – open design

Direction of rotation clockwise

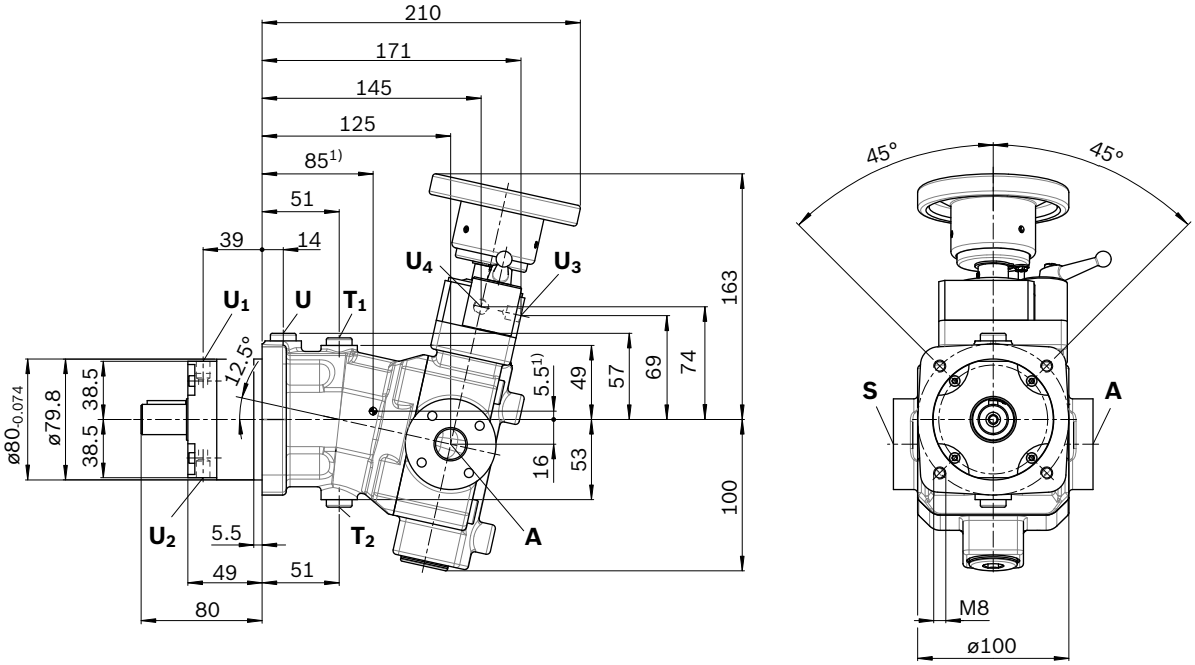

Direction of rotation counter-clockwise

Direction of rotation clockwise

View Z

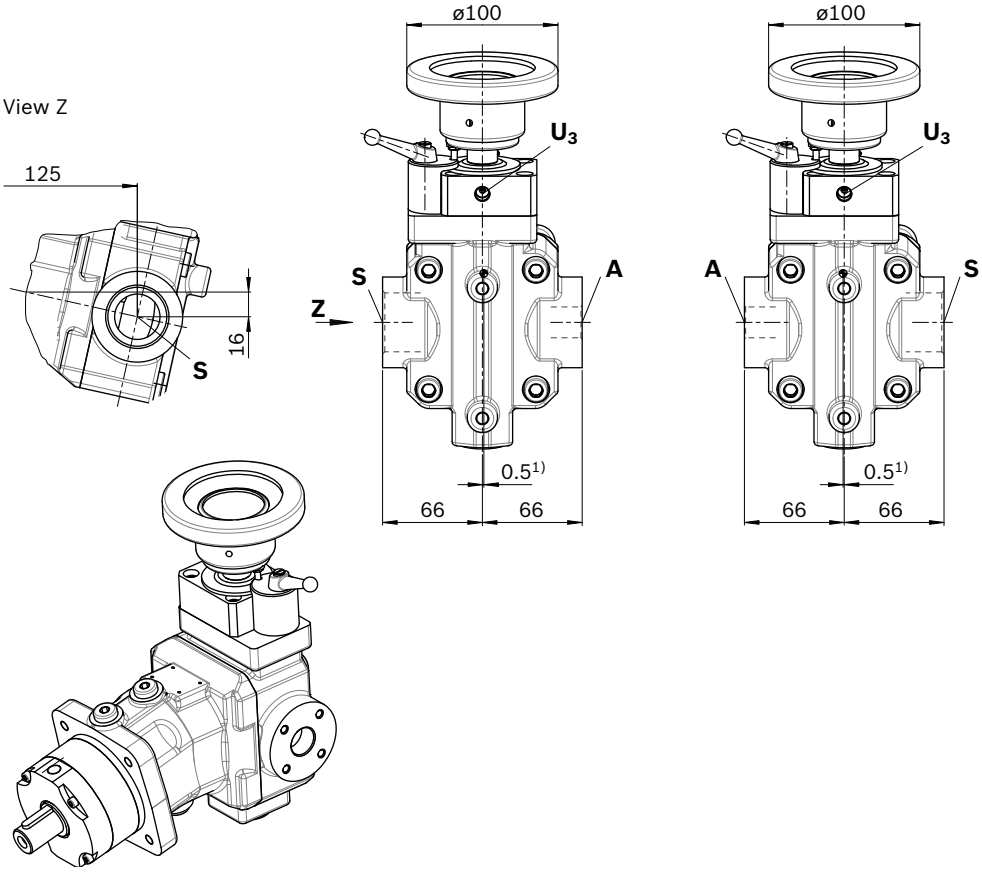

1) Center of gravity

▼ **Parallel keyed shaft to DIN 6885**

P3 – A6x6x25.5

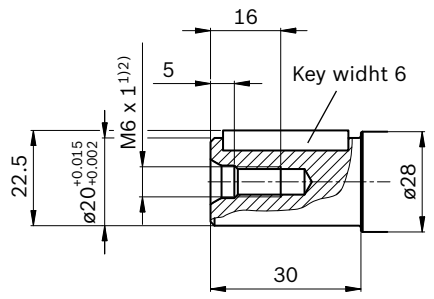

Ports		Standard[4)]	Size[2)]	p_{max} [bar][3)]	State[6)]
A	Service port	DIN 3852	M22 x 1.5; 14 tief	315	O
S	Suction/filling port	DIN ISO 228	G1 1/4; 20 tief	6	O
T_1	Case drain fluid	DIN 3852	M12 x 1.5; 12 tief	6	X
T_2	Case drain fluid	DIN 3852	M12 x 1.5; 12 tief	6	X
U	Bearing flushing	DIN 3852	M12 x 1.5; 12 tief	6	X
U_1, U_2	Barrier fluid	DIN 3852	M10 x 1; 8 tief	3[5)]	O
U_3, U_4	Barrier fluid	DIN 3852	M10 x 1; 8 tief	3[5)]	O

1) Center bore according to DIN 332 (thread according to DIN 13)
2) Observe the general instructions on page 24 for the maximum tightening torques.
3) Momentary pressure spikes may occur depending on the application. Keep this in mind when selecting measuring devices and fittings.
4) The spot face can be deeper than specified in the appropriate standard.
5) The minimum case pressure must be equal to or greater than the barrier fluid pressure. The barrier fluid pressure must be equal to or greater than the external pressure on the outer shaft seal.
6) O = Must be connected (plugged on delivery)
X = Plugged (in normal operation)

Dimensions size 12 – closed design

Direction of rotation clockwise and counter-clockwise identical dimensions

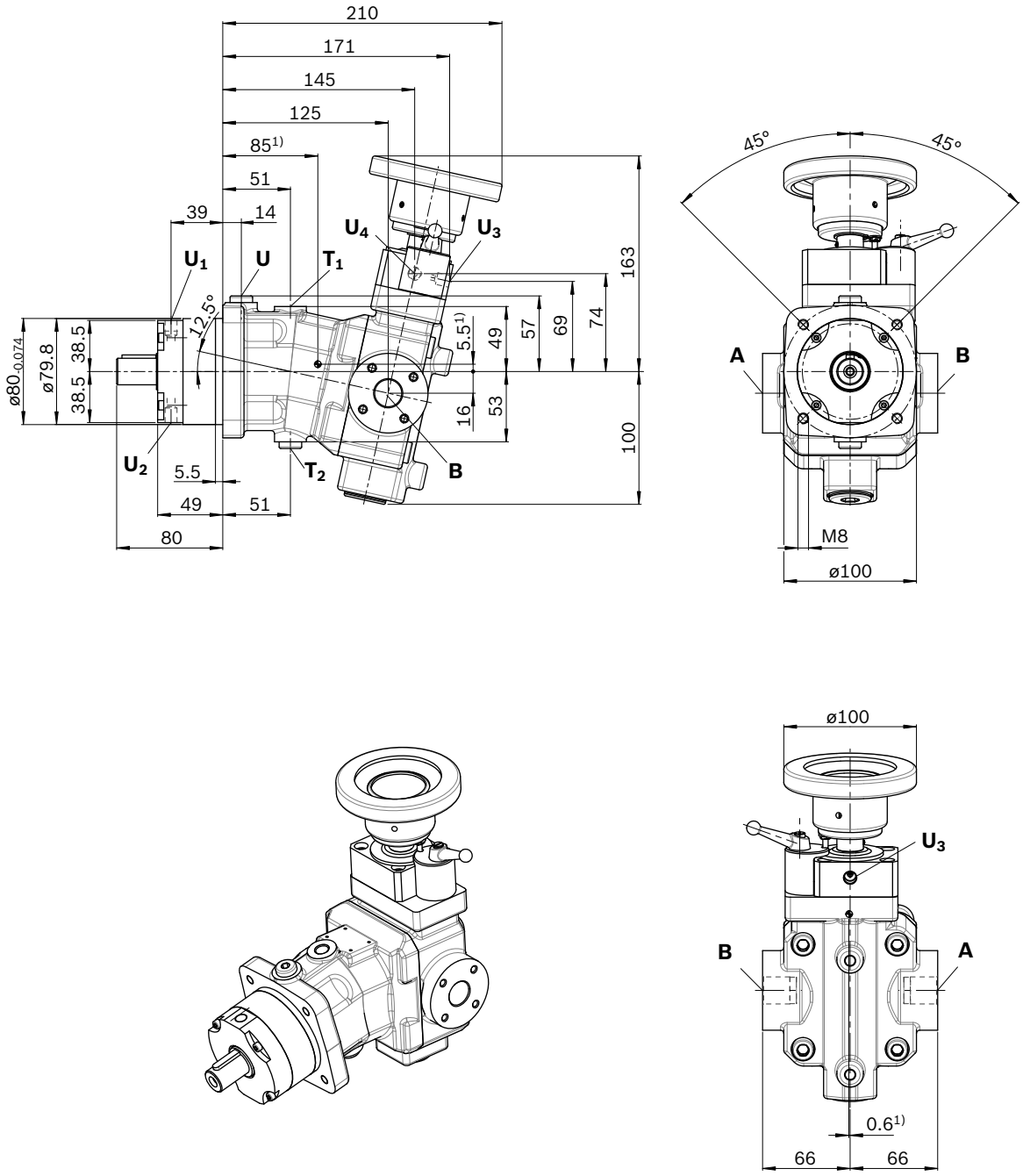

1) Center of gravity

▼ **Parallel keyed shaft DIN 6885**

P3 – A6x6x25.5

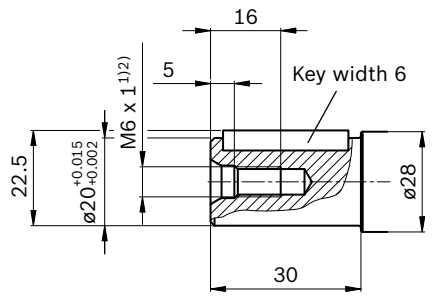

Ports		Standard[4]	Size[2]	p_{max} [bar][3]		State[7]
A	Service port	DIN 3852	M22 x 1.5; 14 tief	clockwise	30	O
				counter-clockwise	315	
B	Service port	DIN 3852	M22 x 1.5; 14 tief	clockwise	315	O
				counter-clockwise	30	
T_1	Case drain fluid	DIN 3852	M12 x 1.5; 12 tief	6		O[6]
T_2	Case drain fluid	DIN 3852	M12 x 1.5; 12 tief	6		X[6]
U	Bearing flushing	DIN 3852	M12 x 1.5; 12 tief	6		X
U_1, U_2	Barrier fluid	DIN 3852	M10 x 1; 8 tief	3[5]		O
U_3, U_4	Barrier fluid	DIN 3852	M10 x 1; 8 tief	3[5]		O

1) Center bore according to DIN 332 (thread according to DIN 13)
2) Observe the general instructions on page 24 for the maximum tightening torques.
3) Momentary pressure spikes may occur depending on the application. Keep this in mind when selecting measuring devices and fittings.
4) The spot face can be deeper than specified in the appropriate standard.
5) The minimum case pressure must be equal to or greater than the barrier fluid pressure. The barrier fluid pressure must be equal to or greater than the external pressure on the outer shaft seal.
6) Depending on installation position, **T_1** or **T_2** must be connected (see also installation instructions page 23).
7) O = Must be connected (plugged on delivery)
X = Plugged (in normal operation)

Dimensions size 28 – open design

Direction of rotation clockwise

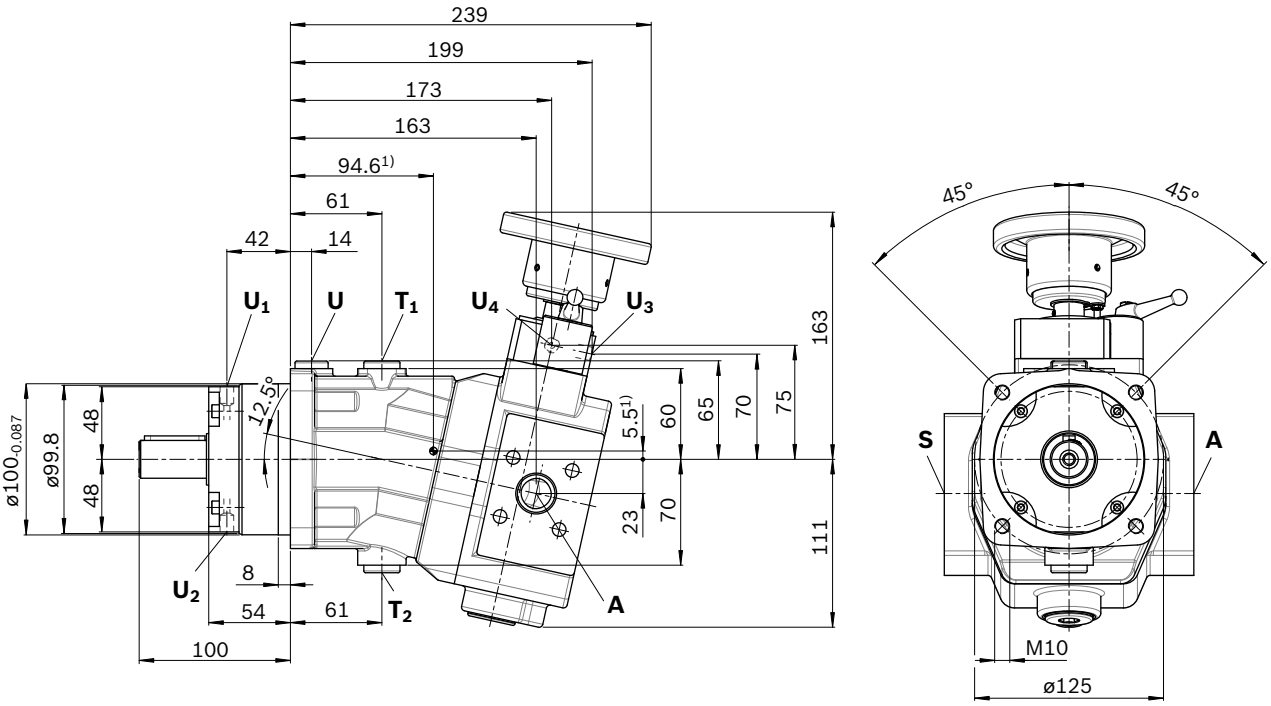

Direction of rotation counter-clockwise

Direction of rotation clockwise

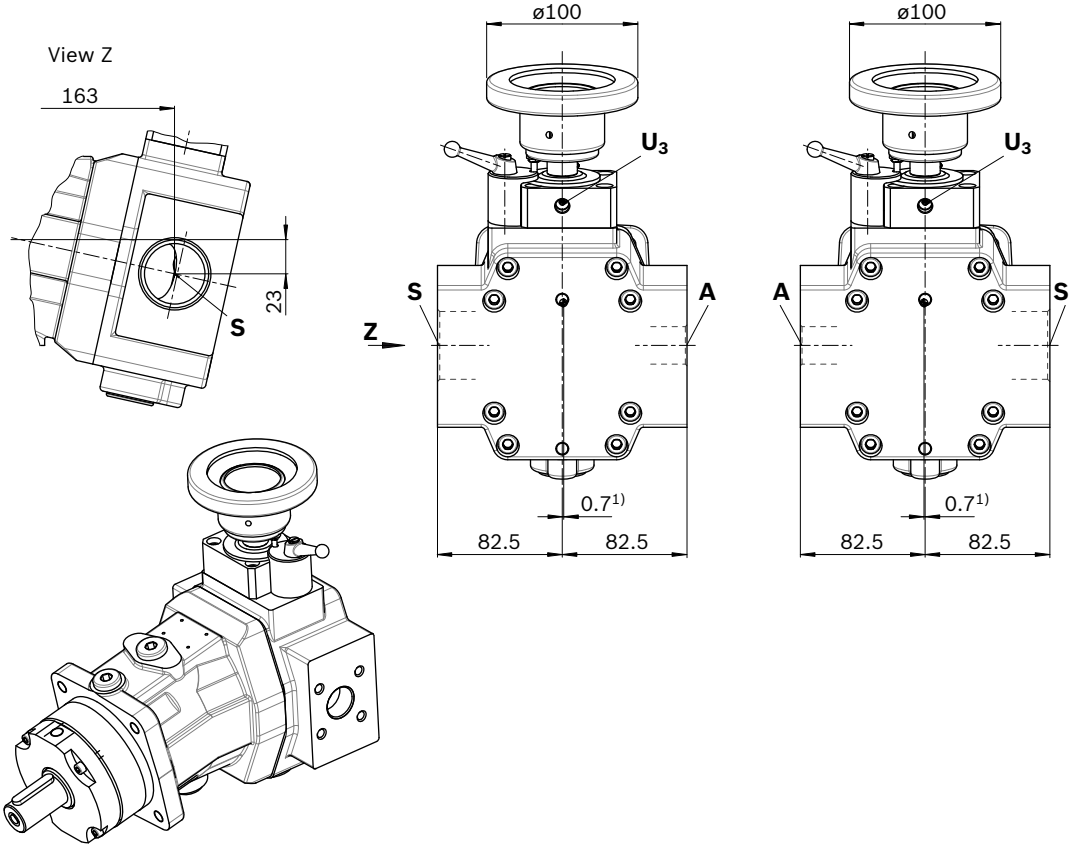

1) Center of gravity

▼ **Parallel keyed shaft DIN 6885**

P5 – AS8x7x40

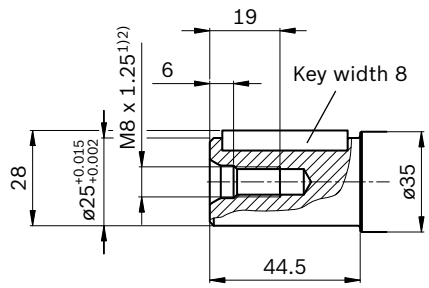

Ports		Standard[4)]	Size[2)]	p_{max} [bar][3)]	State[6)]
A	Service port	DIN 3852	M27 x 2; 16 tief	315	O
S	Suction/filling port	DIN ISO 228	G1 1/2; 20 tief	6	O
T_1	Case drain fluid	DIN 3852	M18 x 1.5; 12 tief	6	X
T_2	Case drain fluid	DIN 3852	M18 x 1.5; 12 tief	6	X
U	Bearing flushing	DIN 3852	M16 x 1.5; 12 tief	6	X
U_1, U_2	Barrier fluid	DIN 3852	M10 x 1; 8 tief	3[5)]	O
U_3, U_4	Barrier fluid	DIN 3852	M10 x 1; 8 tief	3[5)]	O

1) Center bore according to DIN 332 (thread according to DIN 13)
2) Observe the general instructions on page 24 for the maximum tightening torques.
3) Momentary pressure spikes may occur depending on the application. Keep this in mind when selecting measuring devices and fittings.
4) The spot face can be deeper than specified in the appropriate standard.
5) The minimum case pressure must be equal to or greater than the barrier fluid pressure. The barrier fluid pressure must be equal to or greater than the external pressure on the outer shaft seal.
6) O = Must be connected (plugged on delivery)
X = Plugged (in normal operation)

Dimensions size 28 – closed design

Direction of rotation clockwise and counter-clockwise identical dimensions

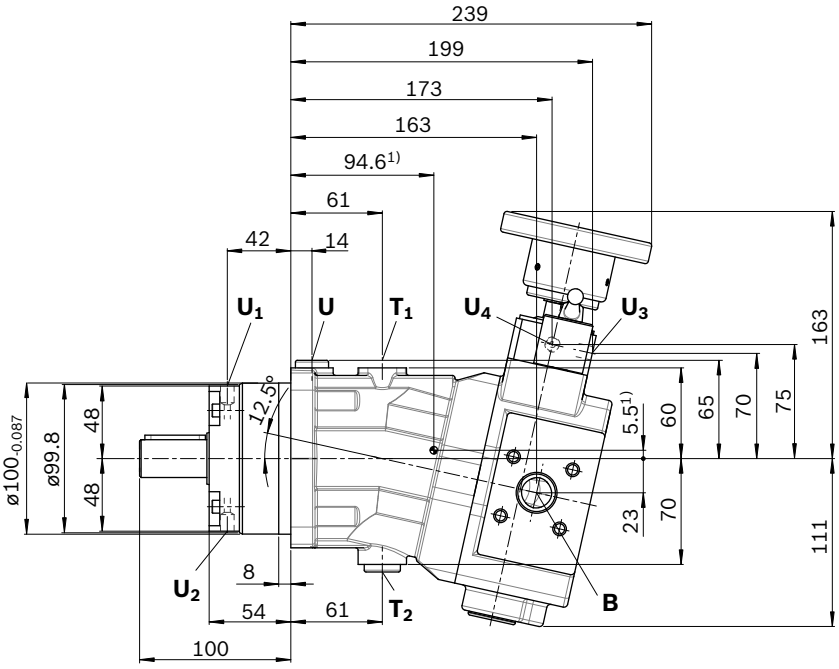

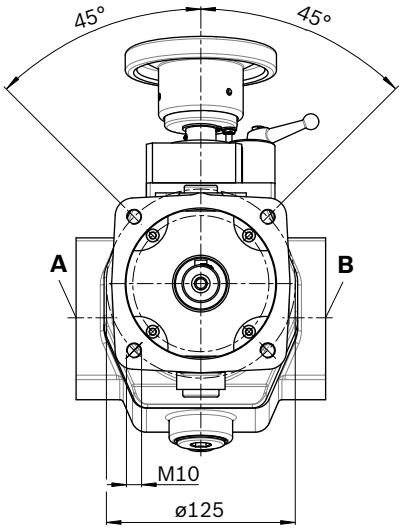

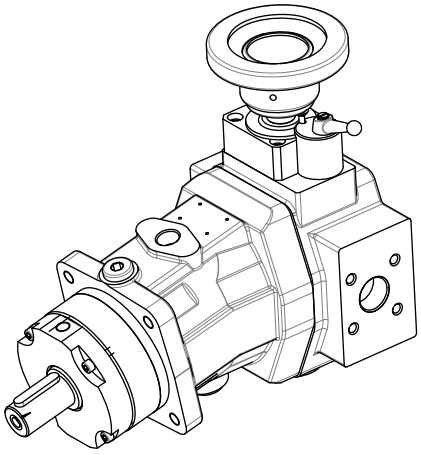

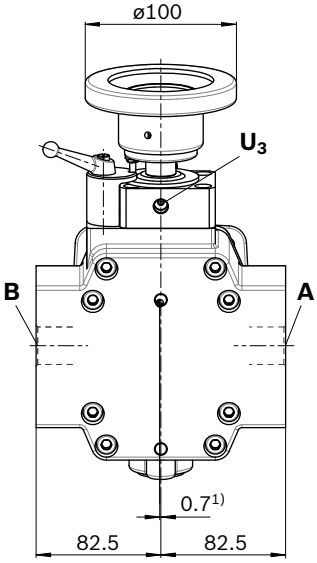

1) Center of gravity

▼ **Parallel keyed shaft DIN 6885**

P5 – AS8x7x40

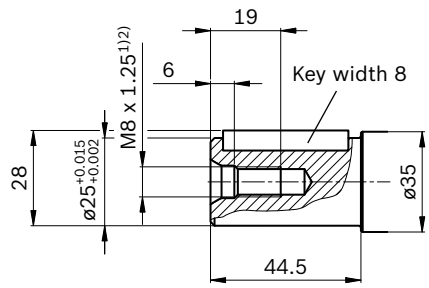

Ports		Standard[4]	Size[2]	p_{max} [bar][3]		State[7]
A	Service port	DIN 3852	M27 x 2; 16 tief	clockwise	30	O
				counter-clockwise	315	
B	Service port	DIN 3852	M27 x 2; 16 tief	clockwise	315	O
				counter-clockwise	30	
T_1	Case drain fluid	DIN 3852	M18 x 1.5; 12 tief	6		O[6]
T_2	Case drain fluid	DIN 3852	M18 x 1.5; 12 tief	6		X[6]
U	Bearing flushing	DIN 3852	M16 x 1.5; 12 tief	6		X
U_1, U_2	Barrier fluid	DIN 3852	M10 x 1; 8 tief	3[5]		O
U_3, U_4	Barrier fluid	DIN 3852	M10 x 1; 8 tief	3[5]		O

1) Center bore according to DIN 332 (thread according to DIN 13)
2) Observe the general instructions on page 24 for the maximum tightening torques.
3) Momentary pressure spikes may occur depending on the application. Keep this in mind when selecting measuring devices and fittings.
4) The spot face can be deeper than specified in the appropriate standard.
5) The minimum case pressure must be equal to or greater than the barrier fluid pressure. The barrier fluid pressure must be equal to or greater than the external pressure on the outer shaft seal.
6) Depending on installation position, **T_1** or **T_2** must be connected (see also installation instructions page 23).
7) O = Must be connected (plugged on delivery)
X = Plugged (in normal operation)

Dimensions size 55 – open design

Direction of rotation clockwise

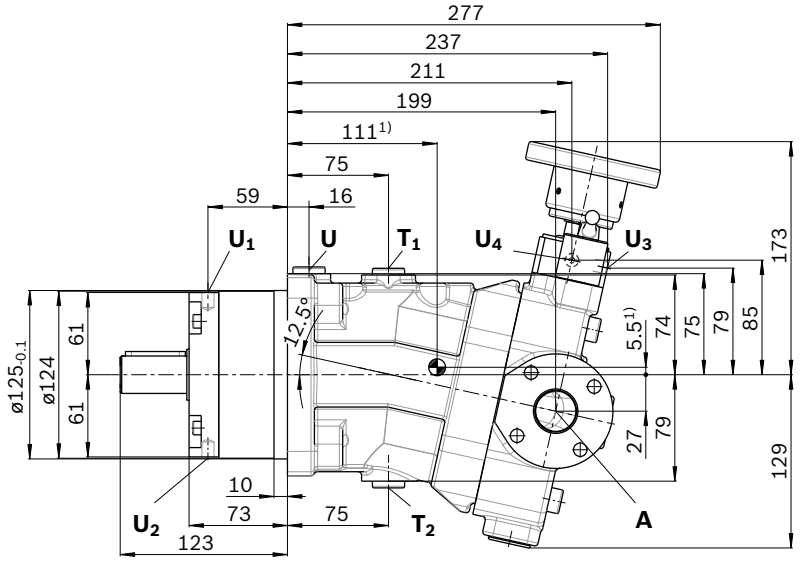

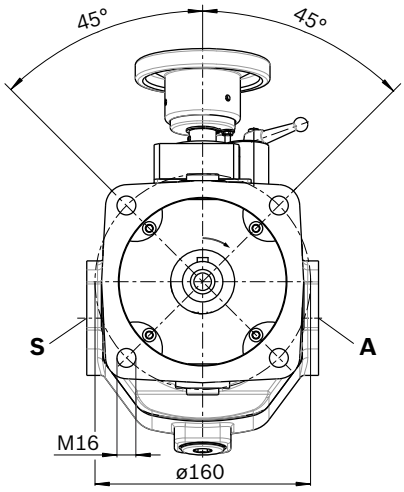

Direction of rotation counter-clockwise

Direction of rotation clockwise

View Z

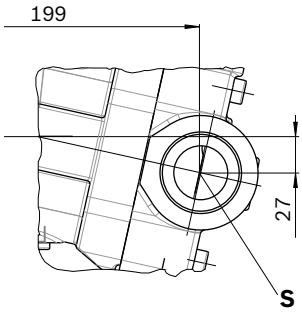

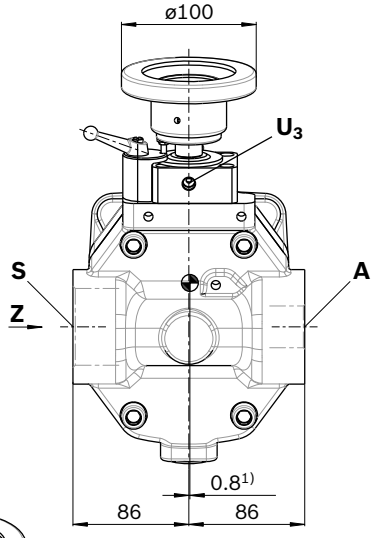

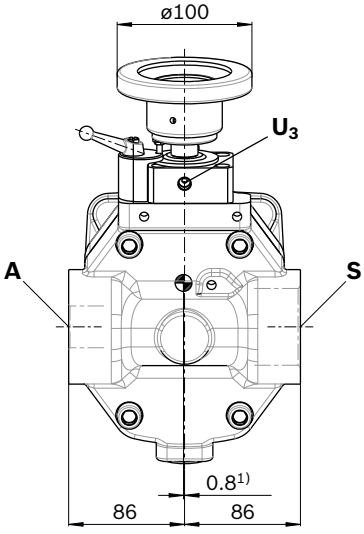

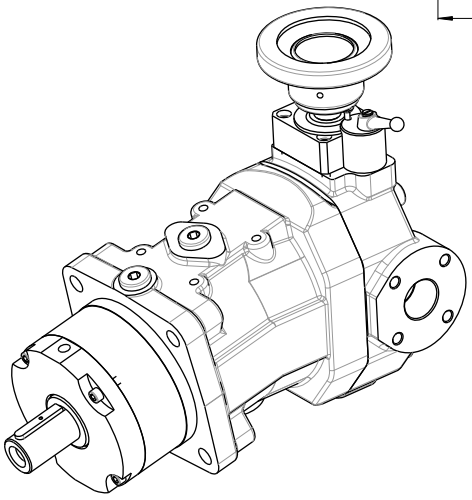

1) Center of gravity

▼ **Parallel keyed shaft DIN 6885**

P6 – AS8x7x43

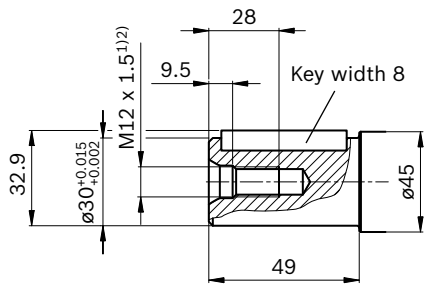

Ports		Standard[4)]	Size[2)]	p_{max} [bar][3)]	State[6)]
A	Service port	DIN 3852	M33 x 2; 18 tief	315	O
S	Suction/filling port	DIN ISO 228	G2; 27 tief	6	O
T_1	Case drain fluid	DIN 3852	M18 x 1.5; 12 tief	6	X
T_2	Case drain fluid	DIN 3852	M18 x 1.5; 12 tief	6	X
U	Bearing flushing	DIN 3852	M18 x 1.5; 12 tief	6	X
U_1, U_2	Barrier fluid	DIN 3852	M10 x 1; 8 tief	3[5)]	O
U_3, U_4	Barrier fluid	DIN 3852	M10 x 1; 8 tief	3[5)]	O

1) Center bore according to DIN 332 (thread according to DIN 13)
2) Observe the general instructions on page 24 for the maximum tightening torques.
3) Momentary pressure spikes may occur depending on the application. Keep this in mind when selecting measuring devices and fittings.
4) The spot face can be deeper than specified in the appropriate standard.
5) The minimum case pressure must be equal to or greater than the barrier fluid pressure. The barrier fluid pressure must be equal to or greater than the external pressure on the outer shaft seal.
6) O = Must be connected (plugged on delivery)
X = Plugged (in normal operation)

Dimensions size 55 – closed design

Direction of rotation clockwise and counter-clockwise identical dimensions

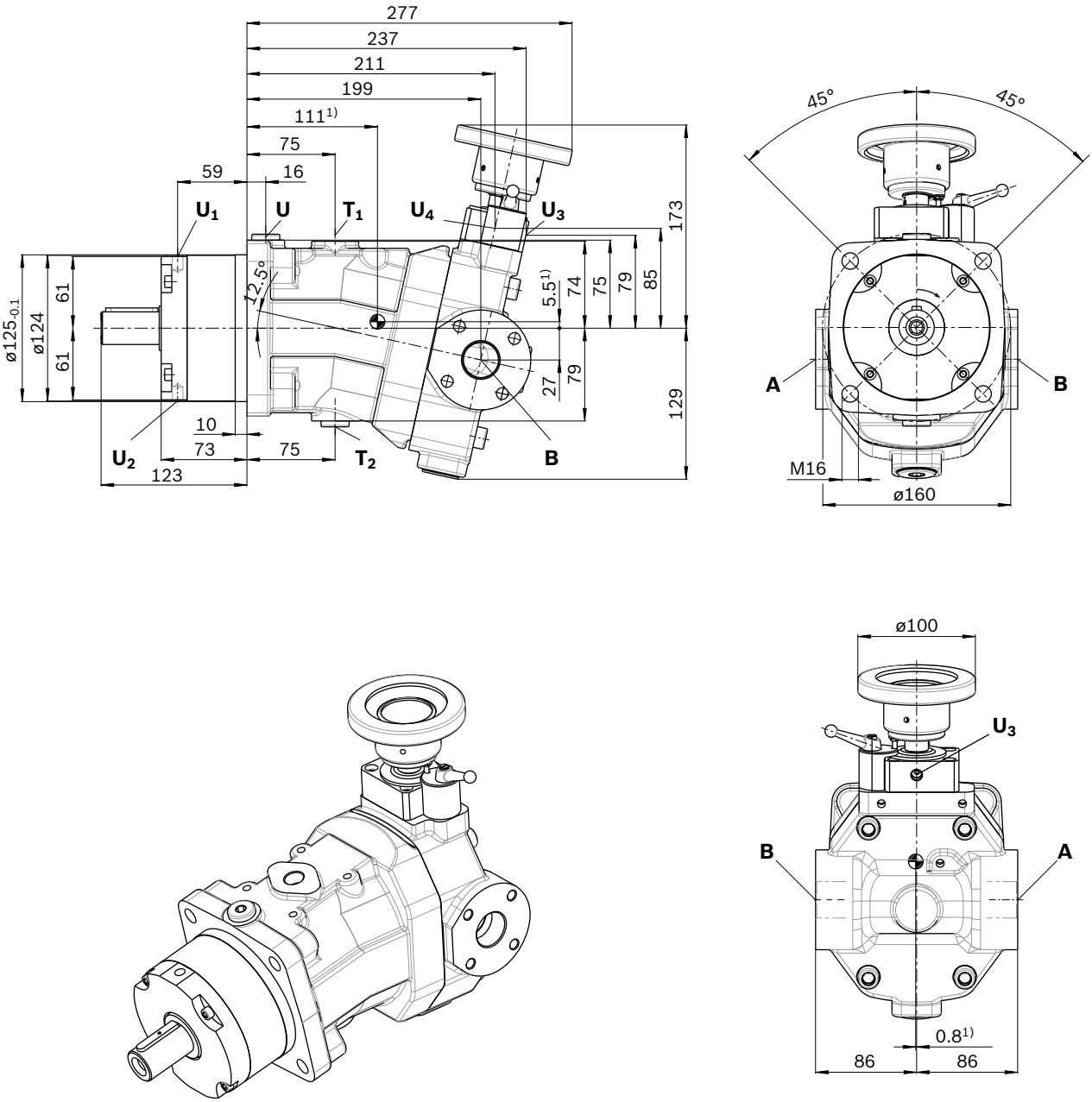

1) Center of gravity

▼ **Parallel keyed shaft DIN 6885**

P6 – AS8x7x43

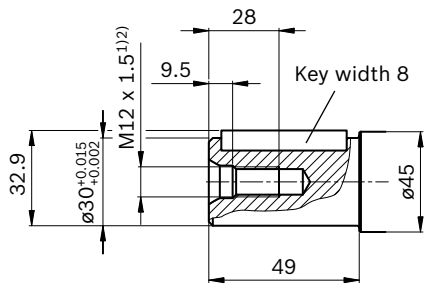

Ports		Standard[4)]	Size[2)]	p_{max} [bar][3)]		State[7)]
A	Service port	DIN 3852	M33 x 2; 18 tief	clockwise	30	O
				counter-clockwise	315	
B	Service port	DIN 3852	M33 x 2; 18 tief	clockwise	315	O
				counter-clockwise	30	
T_1	Case drain fluid	DIN 3852	M18 x 1.5; 12 tief	6		O[6)]
T_2	Case drain fluid	DIN 3852	M18 x 1.5; 12 tief	6		X[6)]
U	Bearing flushing	DIN 3852	M18 x 1.5; 12 tief	6		X
U_1, U_2	Barrier fluid	DIN 3852	M10 x 1; 8 tief	3[5)]		O
U_3, U_4	Barrier fluid	DIN 3852	M10 x 1; 8 tief	3[5)]		O

1) Center bore according to DIN 332 (thread according to DIN 13)
2) Observe the general instructions on page 24 for the maximum tightening torques.
3) Momentary pressure spikes may occur depending on the application. Keep this in mind when selecting measuring devices and fittings.
4) The spot face can be deeper than specified in the appropriate standard.
5) The minimum case pressure must be equal to or greater than the barrier fluid pressure. The barrier fluid pressure must be equal to or greater than the external pressure on the outer shaft seal.
6) Depending on installation position, **T_1** or **T_2** must be connected (see also installation instructions page 23).
7) O = Must be connected (plugged on delivery)
X = Plugged (in normal operation)

Dimensions size 107 – open design

Direction of rotation clockwise

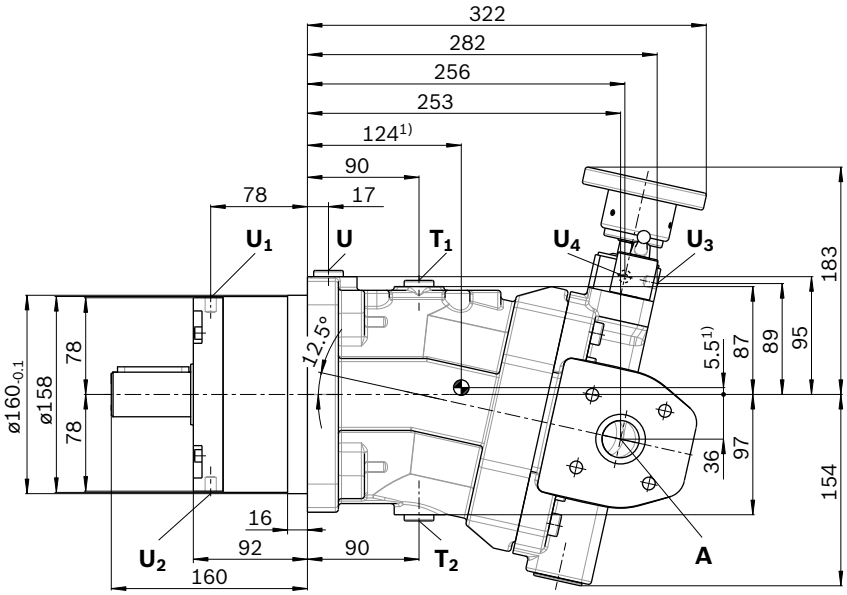

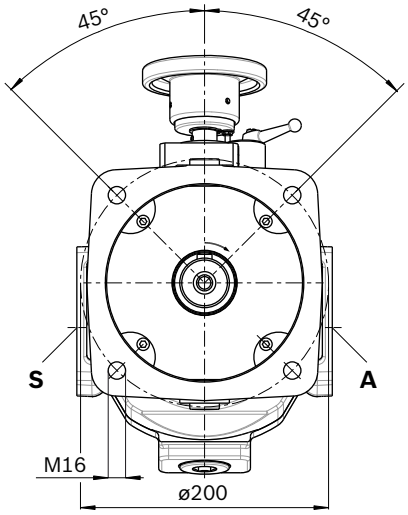

Direction of rotation counter-clockwise

Direction of rotation clockwise

View Z

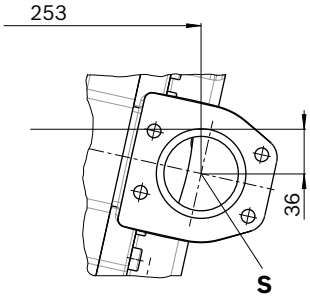

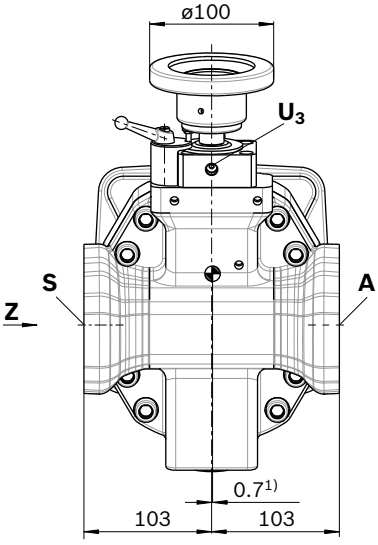

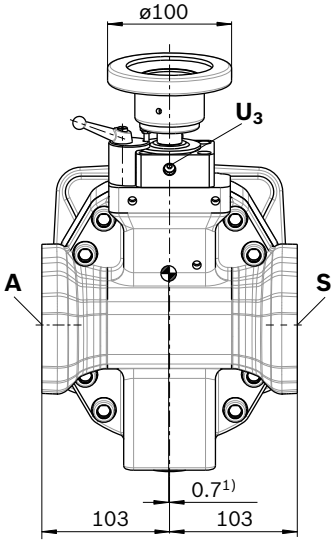

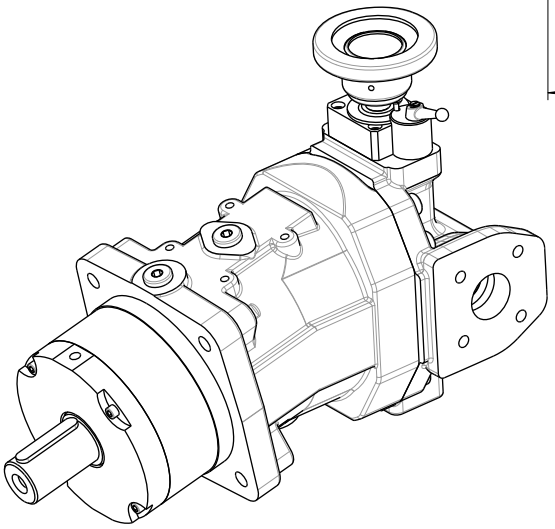

1) Center of gravity

▼ **Parallel keyed shaft DIN 6885**

P9 – AS12x8x63

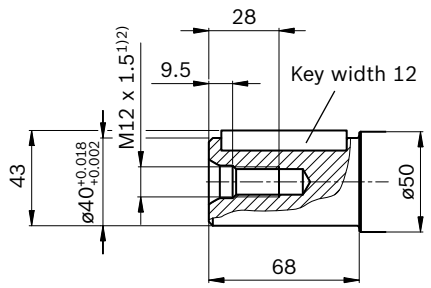

Ports		Standard[4)]	Size[2)]	p_{max} [bar][3)]	State[6)]
A	Service port	DIN 3852	M42 x 2; 20 tief	315	O
S	Suction/filling port	DIN ISO 228	G2 1/2; 30 tief	6	O
T_1	Case drain fluid	DIN 3852	M18 x 1.5; 12 tief	6	X
T_2	Case drain fluid	DIN 3852	M18 x 1.5; 12 tief	6	X
U	Bearing flushing	DIN 3852	M18 x 1.5; 12 tief	6	X
U_1, U_2	Barrier fluid	DIN 3852	M10 x 1; 8 tief	3[5)]	O
U_3, U_4	Barrier fluid	DIN 3852	M10 x 1; 8 tief	3[5)]	O

1) Center bore according to DIN 332 (thread according to DIN 13)
2) Observe the general instructions on page 24 for the maximum tightening torques.
3) Momentary pressure spikes may occur depending on the application. Keep this in mind when selecting measuring devices and fittings.
4) The spot face can be deeper than specified in the appropriate standard.
5) The minimum case pressure must be equal to or greater than the barrier fluid pressure. The barrier fluid pressure must be equal to or greater than the external pressure on the outer shaft seal.
6) O = Must be connected (plugged on delivery)
X = Plugged (in normal operation)

Dimensions size 107 – closed design

Direction of rotation clockwise and counter-clockwise identical dimensions

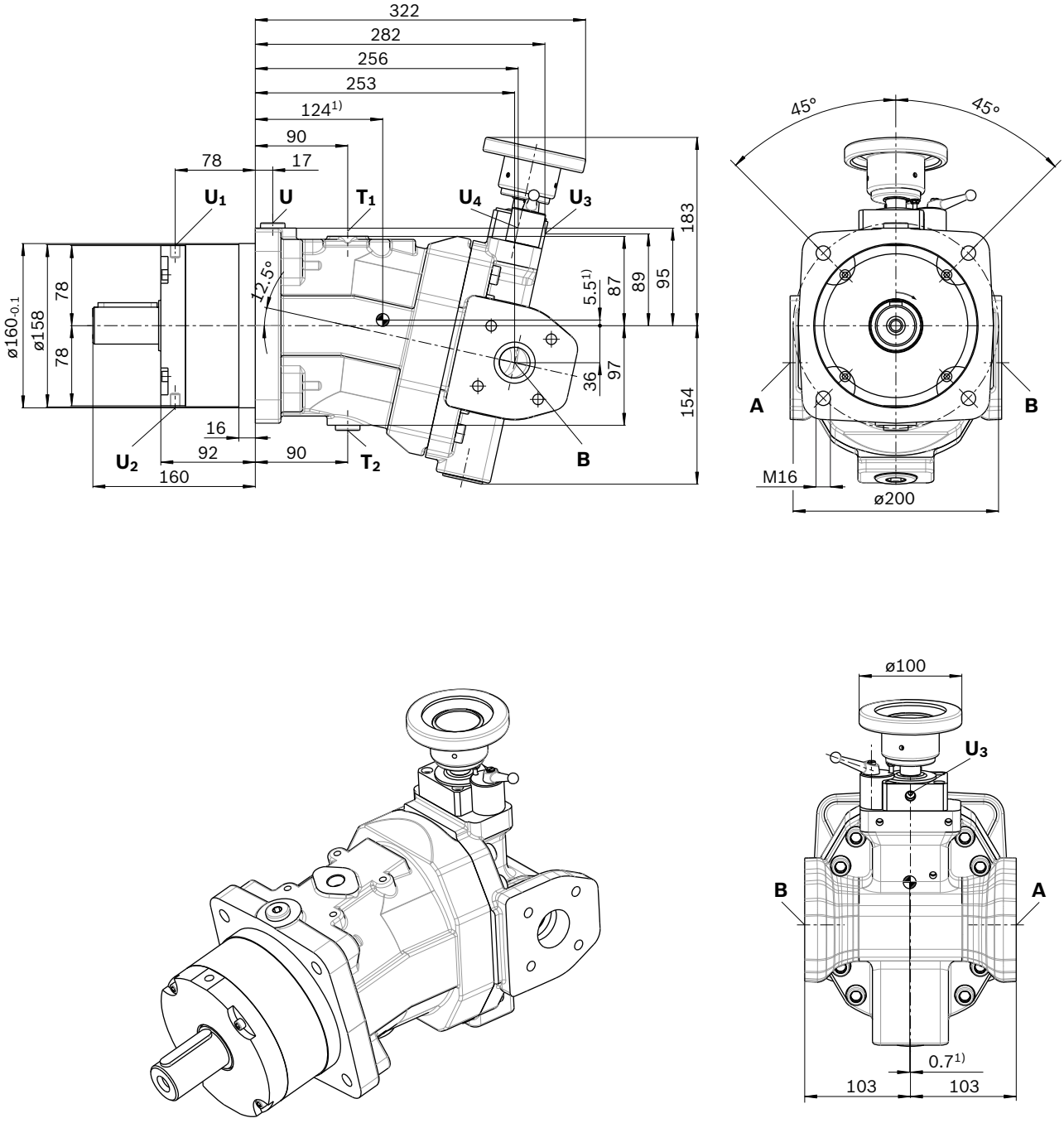

1) Center of gravity

▼ **Parallel keyed shaft DIN 6885**

P9 – AS12x8x63

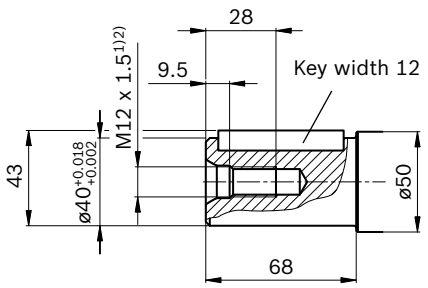

Ports		Standard[4)]	Size[2)]	p_{max} [bar][3)]		State[7)]
A	Service port	DIN 3852	M42 x 2; 20 tief	clockwise	30	O
				counter-clockwise	315	
B	Service port	DIN 3852	M42 x 2; 20 tief	clockwise	315	O
				counter-clockwise	30	
T_1	Case drain fluid	DIN 3852	M18 x 1.5; 12 tief	6		O[6)]
T_2	Case drain fluid	DIN 3852	M18 x 1.5; 12 tief	6		X[6)]
U	Bearing flushing	DIN 3852	M18 x 1.5; 12 tief	6		X
U_1, U_2	Barrier fluid	DIN 3852	M10 x 1; 8 tief	3[5)]		O
U_3, U_4	Barrier fluid	DIN 3852	M10 x 1; 8 tief	3[5)]		O

1) Center bore according to DIN 332 (thread according to DIN 13)
2) Observe the general instructions on page 24 for the maximum tightening torques.
3) Momentary pressure spikes may occur depending on the application. Keep this in mind when selecting measuring devices and fittings.
4) The spot face can be deeper than specified in the appropriate standard.
5) The minimum case pressure must be equal to or greater than the barrier fluid pressure. The barrier fluid pressure must be equal to or greater than the external pressure on the outer shaft seal.
6) Depending on installation position, **T_1** or **T_2** must be connected (see also installation instructions page 23).
7) O = Must be connected (plugged on delivery)
X = Plugged (in normal operation)

High-pressure relief valve direct operated

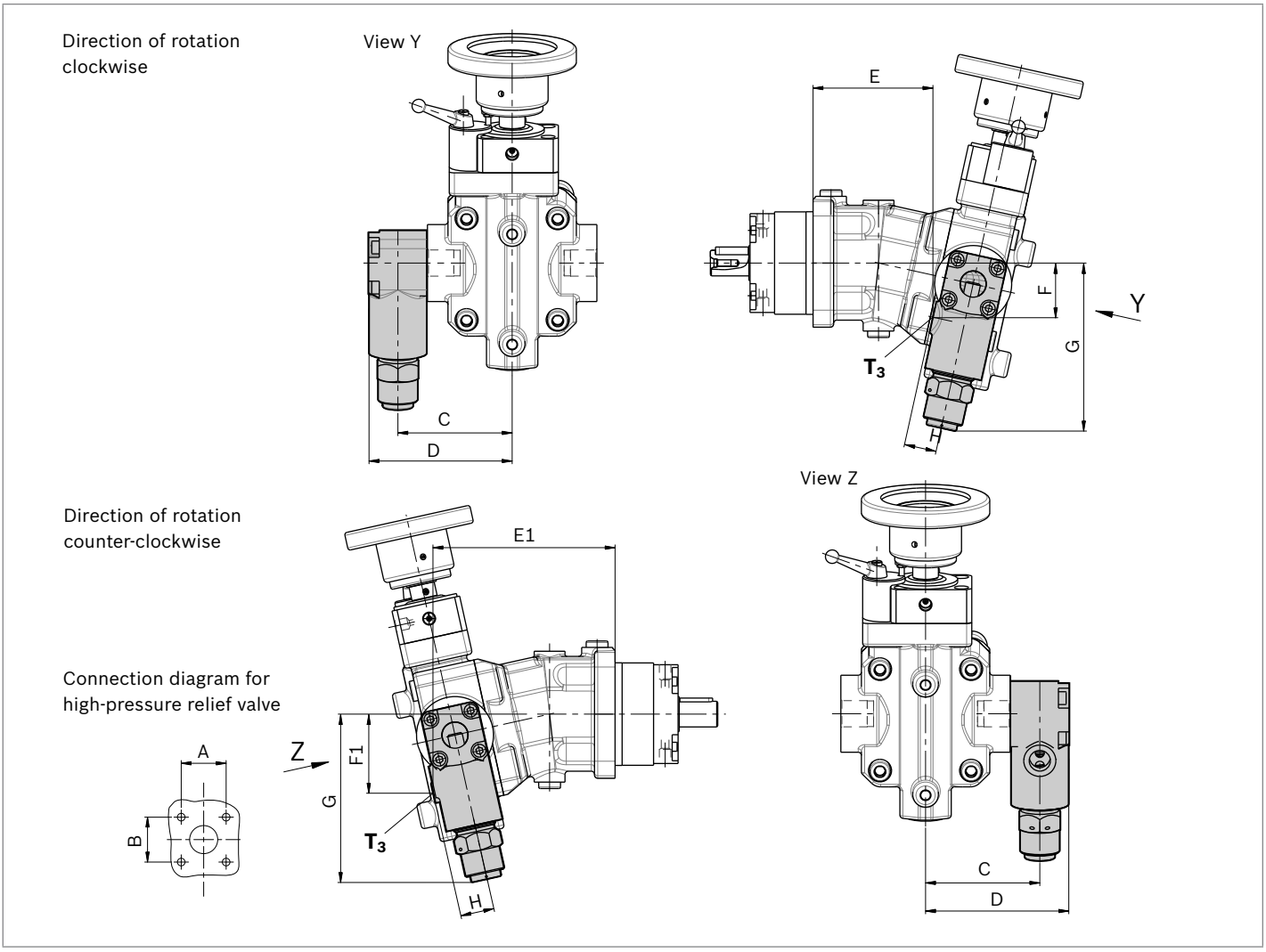

NG	A[2)]	B[2)]	C	D	E	E1	F	F1	G	H	Service line port A, B[1)]	Return port T_3[1)]
12	32	32	89	112	93.5	142	42	53	131	25	M22 x 1.5	M18 x 1.5
28	40	40	107.5	132.5	127.5	181	54	67	143	26	M27 x 2	M22 x 1.5
55	48	48	114	142	157	221	65	79	162	31.5	M33 x 2	M27 x 2
107	60	60	135.5	168	208	272	86	100	206	38.5	M42 x 2	M33 x 2

Differential pressure setting

The following values are available for selection of the differential pressure setting (fixed setting):
Preferred values [bar]: 100, 150, 200, 230, 250
If not specified in the order, valves will be set to the differential pressure Δp = 250 bar.

Mounting

Mounting of the high-pressure relief valve depends on the direction of rotation.
With the closed design, the PRV is always mounted at pressure port **A**. As described, the position of port **A** depends here on the direction of rotation.
In the closed design, the PRV is mounted at pressure port **B** (viewed on drive shaft – right side) for clockwise rotation. For counter-clockwise rotation, it is mounted at pressure port **A** (viewed on drive shaft – left side).

1) DIN 3852, observe the general instructions on page 24 for the maximum tightening torques.

2) Fixing thread according to DIN 13; observe the general instructions on page 24 for the maximum tightening torques.

Installation instructions

General

During commissioning and operation, the axial piston unit must be filled with hydraulic fluid and air bled. The barrier liquid chambers must be filled with suitable barrier liquid. This must also observed following a relatively long standstill as the axial piston unit may drain back to the reservoir via the hydraulic lines.
To achieve favorable noise values, decouple all connecting lines using elastic elements.
In all operating conditions, the suction and case drain lines must flow into the reservoir below the minimum fluid level.

Closed design

The case drain fluid in the pump housing must be directed to the reservoir via the highest available drain port (**T_1**, **T_2**).

Open design

The housing is internally connected to the suction chamber. A case drain line between the housing and reservoir is not required.

Note
For monitoring the shaft seals for zero leakage, we recommend connecting a barrier fluid monitor at ports **U_1** to **U_4**.

Installation position

A standard installation shows the drive shaft in a horizontal position. Further installation positions are available upon request.

Installation position	Air bleed	Filling
1 Open design	**T_1**	**S**

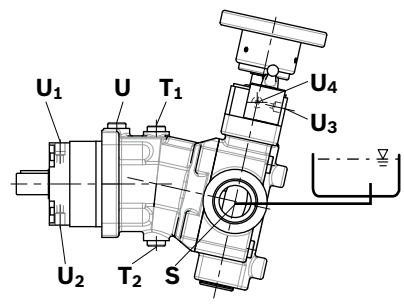

2 Closed design	**T_1**	**T_1**

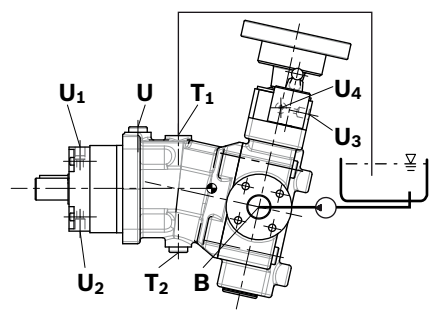

Key	
B	Service line port
S	Suction/filling port
T_1/**T_2**	Filling/air bleeding case drain port
U_1 bis **U_4**	Barrier fluid port
U	Bearing flushing

General instructions

- The pump A7VK is designed for pumping polyurethane components in open and closed design.
- The project planning, installation and commissioning of the axial piston unit requires the involvement of qualified personnel.
- Before using the axial piston unit, please read the corresponding instruction manual completely and thoroughly. If necessary, these can be requested from Bosch Rexroth.
- During and shortly after operation, there is a risk of burns on the axial piston unit and pressure relief valve on the service line port. Take appropriate safety measures (e.g. by wearing protective clothing).
- Service line ports
  - The ports and fastening threads are designed for the specified maximum pressure. The machine or system manufacturer must ensure that the connecting elements and lines correspond to the specified operating conditions (pressure, flow, hydraulic fluid, temperature) with the necessary safety factors.
  - The service line ports and function ports are only designed to accommodate hydraulic lines.
- The data and notes contained herein must be adhered to.
- Before finalizing your design, request a binding installation drawing.
- Not all versions of the product are approved for use in a safety function pursuant to ISO 13849. If you require characteristic values relating to reliability (e.g. MTTFd) for functional safety, please consult the responsible contact person at Bosch Rexroth.
- A pressure relief valve is to be fitted in the hydraulic system.
- The following tightening torques apply:
  - **Fittings:** Observe the manufacturer's instructions regarding the tightening torques of the fittings used.
  - **Mounting bolts:** For mounting bolts with metric ISO thread according to DIN 13, we recommend checking the tightening torque in individual cases in accordance with VDI 2230.
  - **Female threads in the axial piston unit:** The maximum permissible tightening torques $M_{G\ max}$ are maximum values of the female threads and must not be exceeded. For values, see the following table.
  - **Threaded plugs:** For the metallic threaded plugs supplied with the axial piston unit, the required tightening torques of threaded plugs M_V apply. For values, see the following table.

Ports **Standard**	**Thread size**	**Maximum permissible tightening torque of the female threads $M_{G\ max}$**	**Required tightening torque of the threaded plugs M_V**	**WAF hexagon socket of the threaded plugs**
DIN 3852[1)]	M10 x 1	30 Nm	15 Nm[2)]	5 mm
	M12 x 1.5	50 Nm	25 Nm[2)]	6 mm
	M16 x 1.5	100 Nm	50 Nm	8 mm
	M18 x 1.5	140 Nm	60 Nm	8 mm
	M22 x 1.5	210 Nm	80 Nm	10 mm
	M27 x 2	330 Nm	135 Nm	12 mm
	M33 x 2	540 Nm	225 Nm	17 mm
	M42 x 2	720 Nm	360 Nm	22 mm
DIN ISO 228	G1 1/4	720 Nm	–	–
	G1 1/2	960 Nm	–	–
	G2	1200 Nm	–	–
	G2 1/2	2000 Nm	–	–

1) The tightening torques apply for screws in the "dry" state as received on delivery and in the "lightly oiled" state for installation.

2) In the "lightly oiled" state, the M_V is reduced to 10 Nm for M10 x 1 and to 17 Nm for M12 x 1.5.