Axial piston fixed motor A10FM
Axial piston plug-in motor A10FE series 52

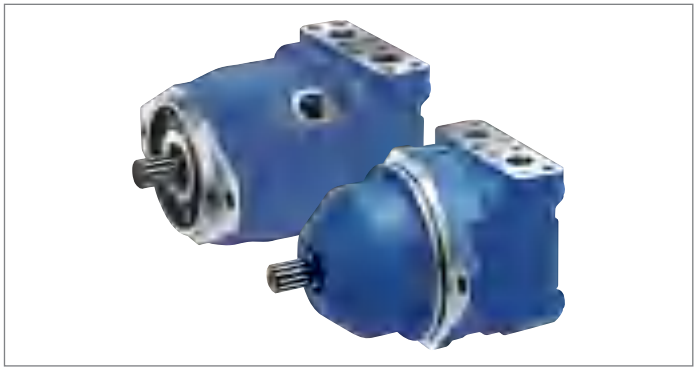

- Universal medium pressure motors
- Sizes 10 to 63
- Nominal pressure 280 bar (4100 psi)
- Maximum pressure 350 bar (5100 psi)
- Open and closed circuits

Features

- Proven A10 rotary group technology
- Approved for high rotational speeds
- Long service life
- High power density
- Compact design for A10FE
- Low operating noise
- Optionally with integral anti cavitation valve, e.g., for fan drives
- Optional: Speed sensor
- Swashplate design

Contents

Type code A10FM	2
Type code A10FE	3
Hydraulic fluids	4
Working pressure range	6
Technical data	7
A10FM - Dimensions, size 23 to 63	10
A10FE - Dimensions, size 10	19
A10FE - Dimensions, size 11 to 63	21
Flushing and boost-pressure valve	32
Anti cavitation valve	33
Prepared for speed sensor	34
Speed sensing	35
Installation instructions	36
Project planning notes	38
Safety instructions	39

Values in the US customary unit system are converted and rounded values. In case of doubt, only metric values are valid.

Type code A10FM

01	02	03		04	05		06	07	08	09	10	11
A10F	**M**		**/**	**52**		**–**	**V**		**C**			

Axial piston unit

01	Swashplate design, constant, nominal pressure 280 bar (4100 psi), maximum pressure 350 bar (5100 psi)	**A10F**

Operating mode

02	Motor, open and closed circuit	**M**

Size (NG)

		023	028	037	045	058	063	
03	For geometric displacement, see table of values, page 7							

Series

04	Series 5, index 2	**52**

Direction of rotation			023	028	037	045	058	063	
05	Viewed on drive shaft	Clockwise[1]	●	●	●	●	●	●	**R**
		Counter-clockwise[1]	●	●	●	●	●	●	**L**
		Alternating	●	●	●	●	●	●	**W**

Sealing material		023	028	037	045	058	063	
06	FKM (fluorocarbon rubber)	●	●	●	●	●	●	**V**

Drive shaft			023	028	037	045	058	063	
07	Splined shaft similar to ISO 3019-1	For high torque	●	●	●	●	●	●	**R**
		For reduced torque	○	○	●	●	●	●	**W**
	Tapered shaft with shaft key and threaded bolt		●	●	●	●	●	●	**C**

Mounting flange		023	028	037	045	058	063	
08	Based on ISO 3019-1 (SAE); 2 hole	●	●	●	●	●	●	**C**

Working port				023	028	037	045	058	063	
09	Flange ports according to ISO 6162	**A** and **B**; laterally; same side	Fastening thread **metric**	●	●	●	●	●	●	**10N00**
		A and **B**; laterally; same side	Fastening thread **UNC**	●	●	●	●	●	●	**60N00**
	Threaded port according to DIN 3852-1	**A** and **B** laterally, same side,	Threaded port, **metric**	●	●	●	●	●	–	**16N00**
	Threaded port according to ISO 11926	**A** and **B** laterally, same side,	Threaded port, **UN**	●	●	●	●	●	–	**66N00**

Valves		023	028	037	045	058	063	
10	Without valve	●	●	●	●	●	●	**0**
	Flushing and boost-pressure valve, integrated	●	●	●	●	●	●	**7**
	Anti cavitation valve, integrated	●	●	●	●	●	●	**2**

Speed sensing		023	028	037	045	058	063	
11	Without speed sensing (without code)	●	●	●	●	●	●	
	Prepared for sensor DST or DSAx	●	●	●	●	●	●	**W**
	Sensor DSA**1**/20 mounted (**1** = one frequency and direction of rotation signal)	●	●	●	●	●	●	**C**[2]
	Sensor DSA**2**/20 mounted (**2** = two 90° phase-shifted frequency signals)	●	●	●	●	●	●	**K**[2]
	DST sensor mounted	●	●	●	●	●	●	**E**[2]

● = Available ○ = On request – = Not available

1) Only when using an integrated anti cavitation valve (order item 10 code 2)

2) Type code, technical data, dimensions and information on the connector, plus safety instructions about the sensor can be found in the relevant data sheet 95131 (DST) or 95126 (DSAx/20).

Notice

- ▶ Note the project planning notes on page 38.
- ▶ In addition to the type code, please specify the relevant technical data when placing your order.

Type code A10FE

01	02	03		04	05		06	07	08	09	10	11
A10F	**E**		**/**	**52**		**–**	**V**					

Axial piston unit

01	Swashplate design, constant, nominal pressure 280 bar (4100 psi), maximum pressure 350 bar (5100 psi)	**A10F**

Operating mode

02	Motor, plug-in design, open and closed circuits	**E**

Size (NG)

		010	011	014	016	018	023	028	037	045	058	063
03	For geometric displacement, see table of values, page 7											

Series

04	Series 5, index 2	**52**

Direction of rotation			010	011	014	016	018	023	028	037	045	058	063	
05	Viewed on drive shaft	Clockwise[1]	●	●	●	●	●	●	●	●	●	●	●	**R**
		Counter-clockwise[1]	●	●	●	●	●	●	●	●	●	●	●	**L**
		Alternating	●	●	●	●	●	●	●	●	●	●	●	**W**

Sealing material		010	011	014	016	018	023	028	037	045	058	063	
06	FKM (fluorocarbon rubber)	●	●	●	●	●	●	●	●	●	●	●	**V**

Drive shaft			010	011	014	016	018	023	028	037	045	058	063	
07	Splined shaft similar to ISO 3019-1	For high torque	○	●	●	●	●	●	●	●	●	●	●	**R**
		For reduced torque	–	–	–	–	–	○	○	●	●	●	●	**W**
	Tapered shaft with shaft key and threaded bolt		●	●	●	●	●	●	●	●	●	●	●	**C**

Mounting flange		010	011	014	016	018	023	028	037	045	058	063	
08	Based on ISO 3019-1 (SAE); 2 hole	●	●	●	●	●	–	–	–	–	–	–	**C**
	2-hole special flange	–	–	–	–	–	●	●	●	●	●	●	**F**
	8-hole special flange	–	●	●	●	●	–	–	–	–	–	–	**H**

Working port				010	011	014	016	018	023	028	037	045	058	063	
09	Flange ports according to ISO 6162	**A** and **B** laterally, same side,	Fastening thread **metric**	–	–	–	–	–	●	●	●	●	●	●	**10N00**
	Threaded port according to DIN 3852-1	**A** and **B** laterally, same side,	Threaded port, **metric**	●	●	●	●	●	●	●	●	●	●	–	**16N00**
	Flange ports according to ISO 6162	**A** and **B** laterally, same side,	Fastening thread **UNC**	–	–	–	–	–	●	●	●	●	●	●	**60N00**
	Threaded port according to ISO 11926	**A** and **B** laterally, same side,	Threaded port, **UN**	●	●	●	●	●	●	●	●	●	●	–	**66N00**

Valves		010	011	014	016	018	023	028	037	045	058	063	
10	Without valve	○	●	○	●	●	●	●	●	●	●	●	**0**
	Flushing and boost-pressure valve, integrated	–	–	–	–	–	●	●	●	●	●	●	**7**
	Anti cavitation valve, integrated	●	●	●	●	●	●	●	●	●	●	●	**2**

Speed sensing		010	011	014	016	018	023	028	037	045	058	063	
11	Without speed sensing (without code)	●	●	●	●	●	●	●	●	●	●	●	
	Prepared for sensor DST or DSAx/20	–	–	–	–	–	●	●	●	●	●	●	**W**
	Sensor DSA**1**/20 mounted (**1** = one frequency and direction of rotation signal)	–	–	–	–	–	●	●	●	●	●	●	**C**[2]
	Sensor DSA**2**/20 mounted (**2** = two 90° phase-shifted frequency signals)	–	–	–	–	–	●	●	●	●	●	●	**K**[2]
	DST sensor mounted	–	–	–	–	–	●	●	●	●	●	●	**E**[2]

1) Only when using an integrated anti cavitation valve (order item 10 code 2)

2) Type code, technical data, dimensions and information on the connector, plus safety instructions about the sensor can be found in the relevant data sheet 95131 (DST) or 95126 (DSAx/20).

Hydraulic fluids

The A10FM, A10FE fixed motor is designed for operation with HLP mineral oil according to DIN 51524. Application instructions and requirements for hydraulic fluid selection, behavior during operation as well as disposal and environmental protection should be taken from the following data sheets before the start of project planning:

- 90220: Hydraulic fluids based on mineral oils and related hydrocarbons
- 90221: Environmentally acceptable hydraulic fluids

Selection of hydraulic fluid

Bosch Rexroth evaluates hydraulic fluids on the basis of the Fluid Rating according to the technical data sheet 90235.
Hydraulic fluids with positive evaluation in the Fluid Rating are listed in the following data sheet:

- 90245: Bosch Rexroth Fluid Rating List for Rexroth hydraulic components (pumps and motors)

The hydraulic fluid should be selected so that the operating viscosity in the operating temperature range is within the optimum range (v_{opt}; see selection diagram).

Viscosity and temperature of hydraulic fluids

	Viscosity	Shaft seal	Temperature[2]	Remarks
Cold start	v_{max} ≤ 1600 mm²/s (cSt)	FKM	ϑ_{St} ≥ −25 °C (−13 °F)	t ≤ 3 min, without load (p ≤ 30 bar (435 psi)), n ≤ 1000 rpm Permissible temperature difference between axial piston unit and hydraulic fluid in the system maximum 25 K (45 °F)
Warm-up phase	v = 1600 ... 400 mm²/s (cSt)			t ≤ 15 min, p ≤ 0.7 × p_{nom} and n ≤ 0.5 × n_{nom}
Permissible operating range	v = 400 ... 10 mm²/s (cSt)[1]	FKM	ϑ ≤ +110 °C (+230 °F)	Measured at port **L_X**
	v_{opt} = 36 ... 16 mm²/s (cSt)			Optimal operating viscosity and efficiency range
Short-term operation	v_{min} = 10 ... 7 mm²/s (cSt)	FKM	ϑ ≤ +110 °C (+230 °F)	t ≤ 1 min, p ≤ 0.3 × p_{nom}, measured at port **L_X**

▼ **Selection diagram**

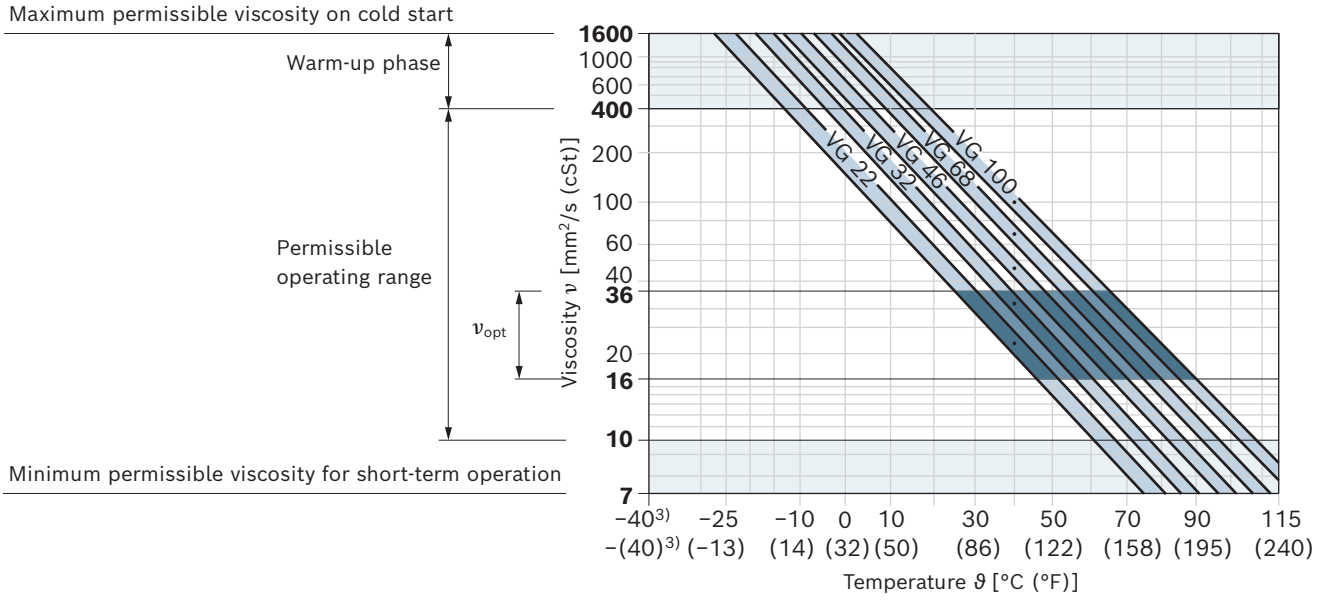

1) This corresponds, for example on the VG 46, to a temperature range of +4 °C to +85 °C (+39 °F to +113 °F) (see selection diagram)

2) If the temperature cannot be adhered to due to extreme operating parameters, please contact us.

3) For applications in the low-temperature range, please contact us.

Filtration of the hydraulic fluid

Finer filtration improves the cleanliness level of the hydraulic fluid, which increases the service life of the axial piston unit.

A cleanliness level of at least 20/18/15 acc. to ISO 4406 should be maintained.

At a hydraulic fluid viscosity of less than 10 mm^2/s (cSt) (e.g., due to high temperatures during short-term operation) at the drain port, a cleanliness level of at least 19/17/14 acc. to ISO 4406 is required.

Examples of temperatures of hydraulic fluids at a viscosity of 10 mm^2/s:

- 73 °C at HLP 32
- 85 °C at HLP 46

Working pressure range

Pressure at working port A or B		Definition
Nominal pressure p_{nom}	280 bar (4100 psi)	The nominal pressure corresponds to the maximum design pressure.
Maximum pressure p_{max}	350 bar (5100 psi)	The maximum pressure corresponds to the maximum working pressure within a single operating period. The sum of single operating periods must not exceed the total operating period.
Single operating period	2.5 ms	
Total operating period	300 h	
Minimum pressure $p_{HD\ absolute}$ (high-pressure side)	10 bar (145 psi)	Minimum pressure on the high-pressure side (**A** or **B**) required to prevent damage to the axial piston unit.
Rate of pressure change $R_{A\ max}$	16000 bar/s (232000 psi)	Maximum permissible speed of pressure build-up and reduction during a pressure change across the entire pressure range.
Pressure at port A or B (low-pressure side)		
Minimum pressure $p_{ND\ min}$	2 bar (30 psi) absolute	Minimum pressure on the low-pressure side (**A** or **B**) required to prevent damage to the axial piston unit (see diagram).
Leakage pressure at port L, L_1		
Max. static pressure $p_{L\ max}$	2 bar (30 psi) absolute	

▼ **Pressure definition**

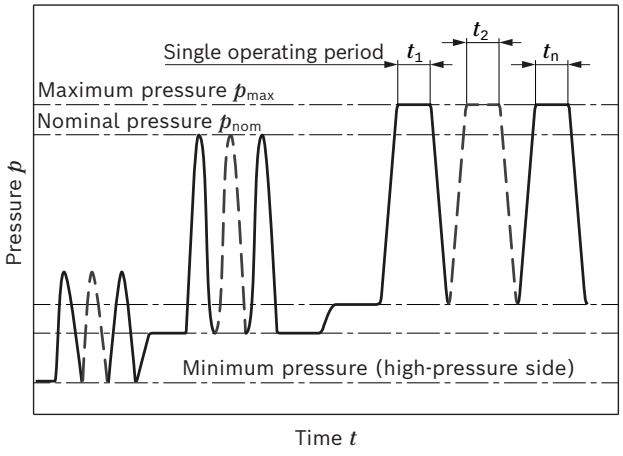

Total operating period = $t_1 + t_2 + ... + t_n$

Permissible motor speed depending on output pressure (low pressure)

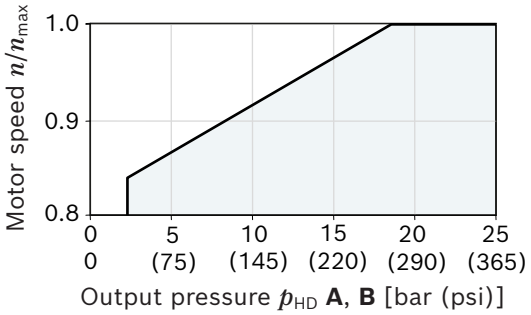

▼ **Rate of pressure change** $R_{A\ max}$

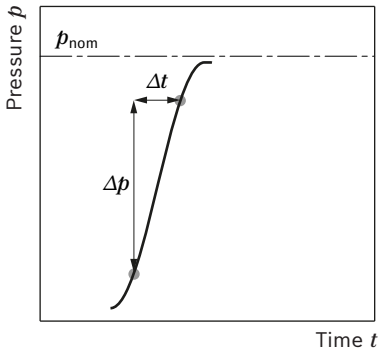

Flow direction

Direction of rotation viewed on drive shaft	Clockwise	Counter-clockwise
	A to **B**	**B** to **A**

Notice
Working pressure range applies when using hydraulic fluids based on mineral oils. Please contact us for values for other hydraulic fluids.

Technical data

Size		NG		10	11	14	16	18	23	28	37	45
Displacement geometric, per revolution		$V_{g\,max}$	cm^3	10.6	11.5	14.1	16.1	18	23.5	28.5	36.7	44.5
			($inch^3$)	(0.65)	(0.70)	(0.86)	(0.98)	(1.10)	(1.43)	(1.73)	(2.24)	(2.71)
Maximum rotational speed[1)2)]	at $V_{g\,max}$	n_{nom}	rpm	5000	4200	4200	4200	4200	4900	4700	4200	4000
Inlet flow	at n_{nom}	$q_{v\,max}$	l/min	53	48	59	68	76	115	134	154	178
			(gpm)	(14)	(12.7)	(15.6)	(17.9)	(20.1)	(30.4)	(35.4)	(40.7)	(47)
Power	at n_{nom} and p_N= 280 bar (4100 psi)	P_{max}	kW	24.7	22.5	27.6	31.6	35.3	53.6	62.5	71.8	83.1
			(HP)	(33)	(30)	(37)	(42)	(47)	(71)	(83)	(95)	(111)
Actual starting torque, approx.	at n= 0 rpm and p_N= 280 bar (4100 psi)	M	Nm	37.5	30	45	53	67.5	75	105	125	170
			(lb-ft)	(27.6)	(22.1)	(33.2)	(39.1)	(49.8)	(55.3)	(77.5)	(92.2)	(125)
Torque	at $V_{g\,max}$ and p_N= 280 bar (4100 psi)	M_{max}	Nm	47	51	63	72	80	105	127	163	198
			(lb-ft)	(34.6)	(37.5)	(46.5)	(53.1)	(59)	(77.4)	(93.7)	(120)	(146)
Rotary stiffness of drive shaft	R	c	Nm/rad	–	–	–	–	14835	28478	28478	46859	46859
			(lb-ft/rad)	–	–	–	–	(10942)	(21005)	(21005)	(34563)	(34563)
	W	c	Nm/rad	–	–	–	–	–	–	–	38489	38489
			(lb-ft/rad)	–	–	–	–	–	–	–	(28389)	(28389)
	C	c	Nm/rad	15084	18662	18662	18662	18662	30017	30017	46546	46546
			(lb-ft/rad)	(11126)	(13765)	(13765)	(13765)	(13765)	(22140)	(22140)	(34332)	(34332)
Moment of inertia of the rotary group		J_{TW}	kgm^2	0.0006	0.00093	0.00093	0.00093	0.00093	0.0017	0.0017	0.0033	0.0033
			($lb\text{-}ft^2$)	(0.014)	(0.022)	(0.022)	(0.022)	(0.022)	(0.04)	(0.04)	(0.078)	(0.078)
Maximum angular acceleration[3)]		α	rad/s^2	8000	6800	6800	6800	6800	5500	5500	4000	4000
Case volume		V	l	0.1	0.15	0.15	0.15	0.15	0.6	0.6	0.7	0.7
			(gal)	(0.03)	(0.04)	(0.04)	(0.04)	(0.04)	(0.16)	(0.16)	(0.18)	(0.18)
Weight approx.		m	kg	5	6.5	6.5	6.5	6.5	12	12	17	17
			(lbs)	(11.0)	(14.3)	(14.3)	(14.3)	(14.3)	(26.5)	(26.5)	(37.5)	(37.5)

Notice

- Theoretical values, without efficiency and tolerances; values rounded
- Operation above the maximum values or below the minimum values may result in a loss of function, a reduced service life or in the destruction of the axial piston unit. Bosch Rexroth recommends checking loads through tests or calculation/simulation and comparing them with the permissible values.

For formulas to determine the characteristics, see page 8

1) The values are applicable:
   – for the optimum viscosity range from v_{opt} = 36 to 16 mm^2/s (cSt)
   – with hydraulic fluid based on mineral oils
2) The maximum rotational speed depends on the output pressure at the working port **A** (**B**) (see diagram on page 6).
3) The data are valid for values between the minimum required and maximum permissible rotational speed. Valid for external excitation (e.g. diesel engine 2 to 8 times rotary frequency; cardan shaft twice the rotary frequency). The limit value is only valid for a single pump. The load capacity of the connection parts must be considered.

Size		NG		58	63
Displacement geometric, per revolution		$V_{g\,max}$	cm^3	58	63.1
			($inch^3$)	(3.53)	(3.84)
Maximum rotational speed[1)2)]	at $V_{g\,max}$	n_{nom}	rpm	3600	3400
Inlet flow	at n_{nom}	$q_{v\,max}$	l/min	209	215
			(gpm)	(55.2)	(56.8)
Power	at n_{nom} and p_N= 280 bar (4100 psi)	P_{max}	kW	97.4	100.1
			(HP)	(130)	(133)
Actual starting torque, approx.	at n= 0 rpm and p_N= 280 bar (4100 psi)	M	Nm	205	230
			(lb-ft)	(151)	(169)
Torque	at $V_{g\,max}$ and p_N= 280 bar (4100 psi)	M_{max}	Nm	258	281
			(lb-ft)	(190)	(207)
Rotary stiffness of drive shaft	R	c	Nm/rad	80590	80590
			(lb-ft/rad)	(59443)	(59443)
	W	c	Nm/rad	60907	60907
			(lb-ft/rad)	(44935)	(44935)
	C	c	Nm/rad	87667	87667
			(lb-ft/rad)	(64663)	(64663)
Moment of inertia of the rotary group		J_{TW}	kgm^2	0.0056	0.0056
			($lb\text{-}ft^2$)	(0.133)	(0.133)
Maximum angular acceleration[3)]		α	rad/s^2	3300	3300
Case volume		V	l	0.8	0.8
			(gal)	(0.21)	(0.21)
Weight approx.		m	kg	22	22
			(lbs)	(48.5)	(48.5)

Determination of the characteristics

Displacement	q_v	$= \frac{V_g \times n}{1000 \times \eta_v}$		[l/min]
Torque	M	$= \frac{V_g \times \Delta p \times \eta_{hm}}{20 \times \pi}$		[Nm]
Power	P	$= \frac{2 \pi \times M \times n}{60000}$	$= \frac{q_v \times \Delta p \times \eta_t}{600}$	[kW]
Output speed	n	$= \frac{q_V \times 1000 \times \eta_V}{V_g}$		[rpm]

Key

V_g	=	Displacement per revolution [cm^3]
Δp	=	Differential pressure [bar]
n	=	Rotational speed [rpm]
η_v	=	Volumetric efficiency
η_{hm}	=	Hydraulic-mechanical efficiency
η_t	=	Total efficiency ($\eta_t = \eta_v \times \eta_{hm}$)

Determination of the characteristics

Displacement	q_v	$= \frac{V_g \times n}{231 \times \eta_v}$		[gpm]
Torque	M	$= \frac{V_g \times \Delta p \times \eta_{hm}}{24 \times \pi}$		[lb-ft]
Power	P	$= \frac{2 \pi \times M \times n}{33000}$	$= \frac{q_v \times \Delta p \times \eta_t}{1714}$	[HP]
Output speed	n	$= \frac{q_V \times 231 \times \eta_V}{V_g}$		[rpm]

Key

V_g	=	Displacement per revolution [$inch^3$]
Δp	=	Differential pressure [psi]
n	=	Rotational speed [rpm]
η_v	=	Volumetric efficiency
η_{hm}	=	Hydraulic-mechanical efficiency
η_t	=	Total efficiency ($\eta_t = \eta_v \times \eta_{hm}$)

For information on the technical data, see page 7

Permissible radial and axial loading on the drive shafts

Size		NG		10	11	14	16	18	23	28	37	45	58	63
Drive shaft	R, W C													
Maximum radial force at a/2	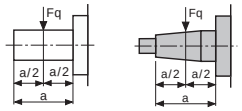	$F_{q\ max}$	N	250	350	350	350	350	1200	1200	1500	1500	1700	1700
			(lb)	(56)	(79)	(79)	(79)	(79)	(270)	(270)	(337)	(337)	(382)	(382)
Maximum axial force	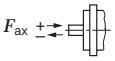	$\pm F_{ax\ max}$	N	400	700	700	700	700	1000	1000	1500	1500	2000	2000
			(lb)	(90)	(157)	(157)	(157)	(157)	(225)	(225)	(337)	(337)	(450)	(450)

Notice

- The specified values are maximum values and must not be exceeded in continuous operation. For radial and axial loading, please contact us.
- All loads of the drive shaft reduce the bearing service life!

A10FM - Dimensions, size 23 to 28

Port plate 10(60)N000

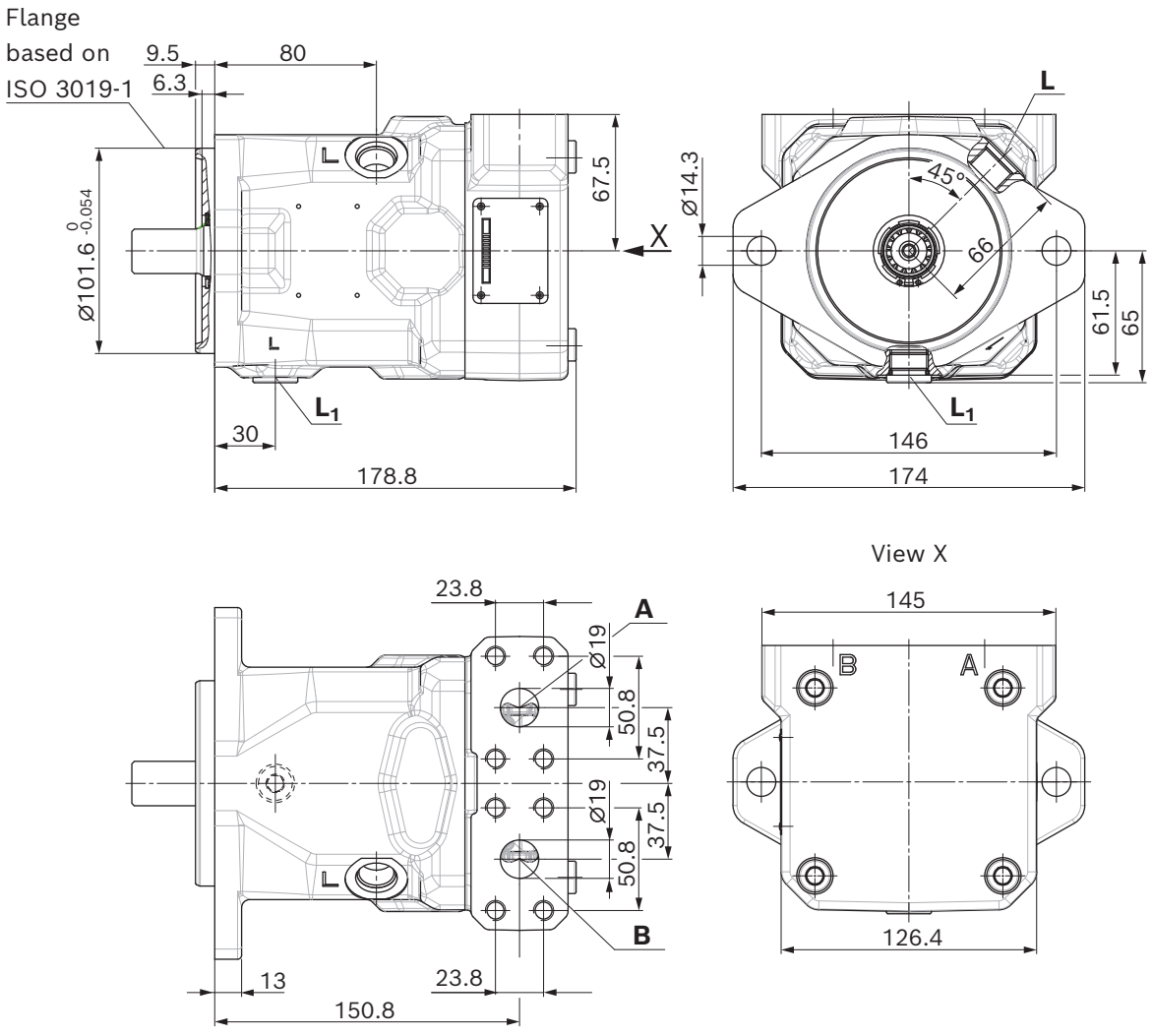

A10FM - Dimensions, size 23 to 28

Port plate 16(66)N000

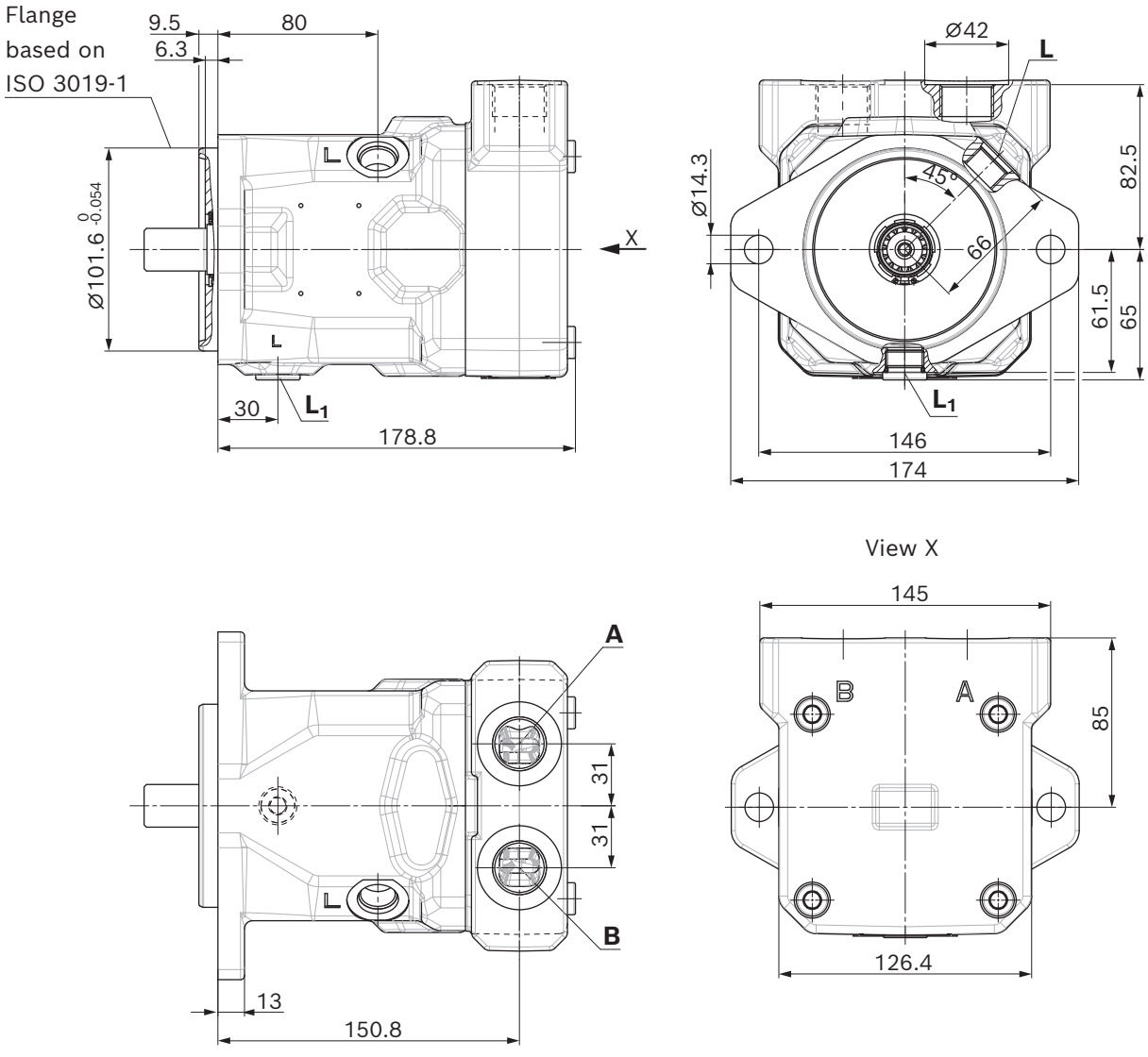

▼ **Splined shaft 7/8 in (22-4(B) similar to ISO 3019-1)**

R – 13T 16/32DP[1)2)]

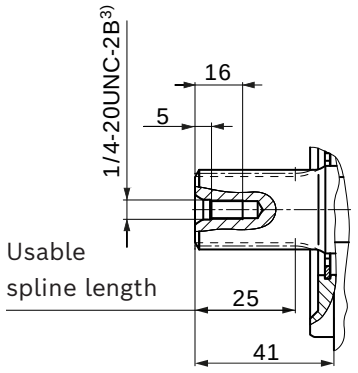

▼ **Conical keyed shaft with threaded spigot UNF[8)] (22-3(B) similar to ISO 3019-1)**

C

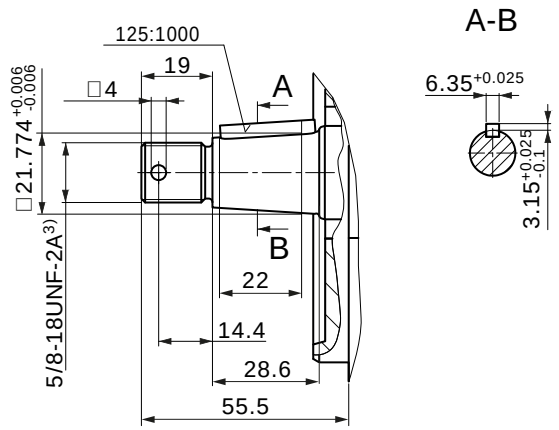

Ports		Standard	Size	p_{max} [bar (psi)][4)]	State[7)]
Port plate 10					
A, **B**	Working port (high-pressure series) Fastening thread	ISO 6162-2 DIN 13	3/4 in M10 × 1.5; 17 (0.67) deep	350 (5100)	O
Port plate 60					
A, **B**	Working port (high-pressure series) Fastening thread	ISO 6162-2 ASME B1.1	3/4 in 3/8-16UNC-2B 21 (0.83) deep	350 (5100)	O
Port plate 16					
A, **B**	Working port	DIN 3852-1	M27 × 2; 16 (0.63) deep	350 (5100)	O
Port plate 66					
A, **B**	Working port	ISO 11926	1 1/16-12UN-2B; 20 (0.79) deep	350 (5100)	O
Other ports					
L	Drain port	ISO 11926[5)]	3/4-16UNF-2B; 15 (0.59) deep	4 (60)	O[6)]
$\mathbf{L_1}$	Drain port	ISO 11926[5)]	3/4-16UNF-2B; 15 (0.59) deep	4(60)	X[6)]

1) Involute spline according to ANSI B92.1a, 30° pressure angle, flat root, side fit, tolerance class 5
2) Spline runout is a deviation from the ISO 3019-1 standard.
3) Thread according to ASME B1.1
4) Depending on the application, momentary pressure peaks can occur. Keep this in mind when selecting measuring devices and fittings.
5) The countersink may be deeper than specified in the standard.
6) Depending on the installation position, **L** or $\mathbf{L_1}$ must be connected (see also installation instructions on pages 36).
7) O = Must be connected (plugged on delivery)
X = Plugged (in normal operation)
8) Metric threaded spigot on request

A10FM - Dimensions, size 37 to 45

Port plate 10(60)N000

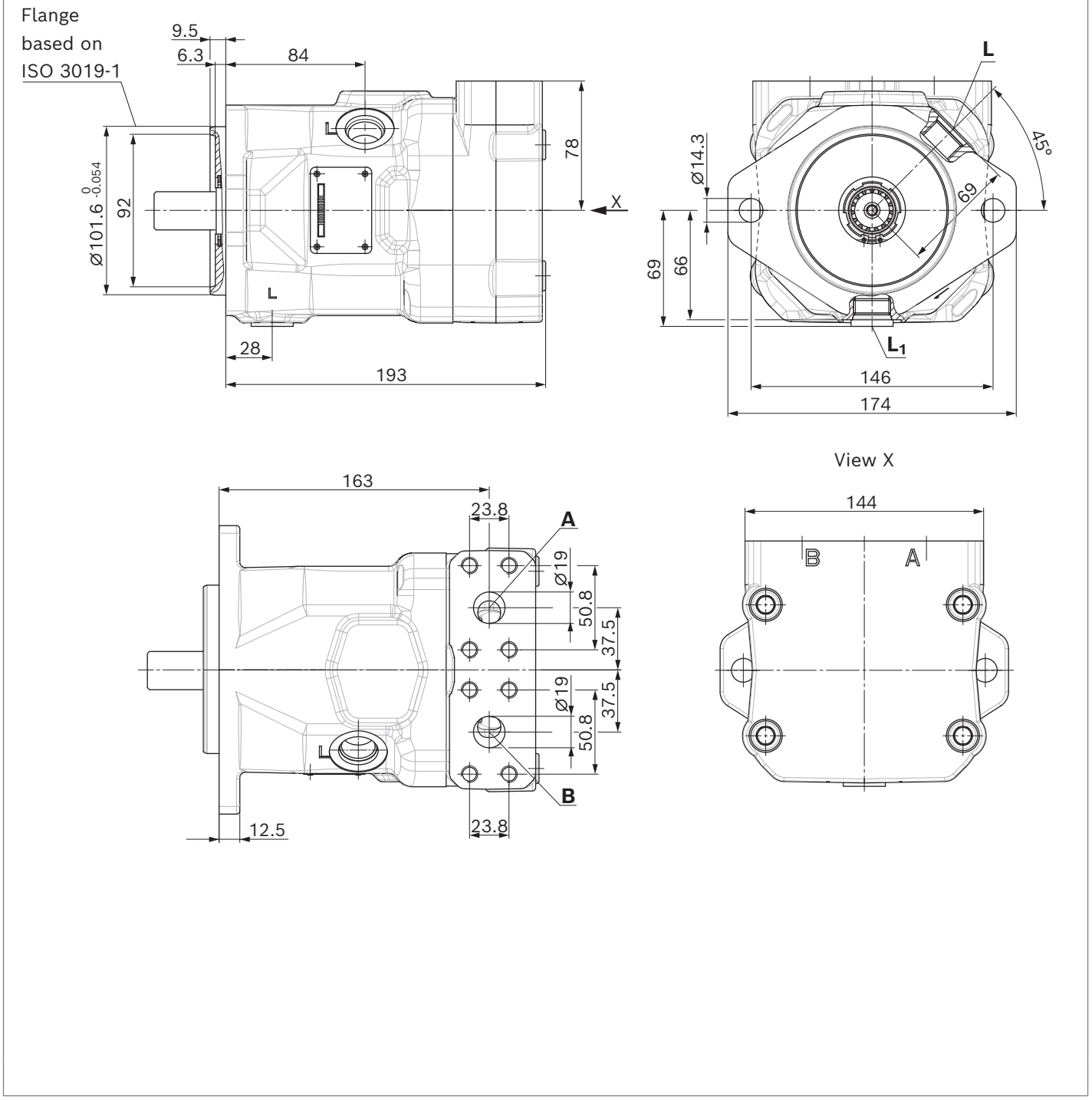

A10FM - Dimensions, size 37 to 45

Port plate 16(66)N000

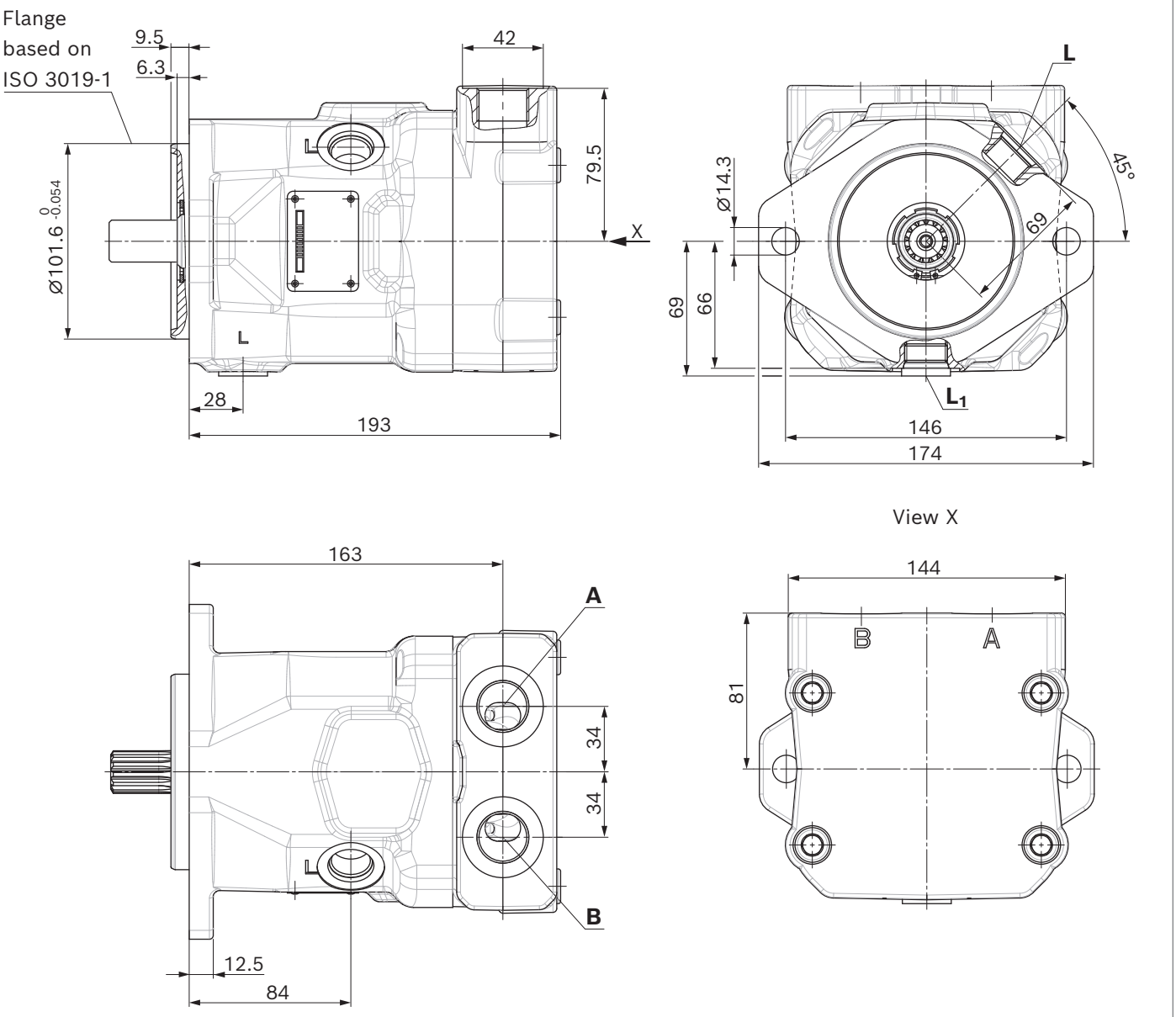

▼ **Splined shaft 1 in (25-4(B-B) similar to ISO 3019-1)**

R – 15T 16/32DP[1)2)]

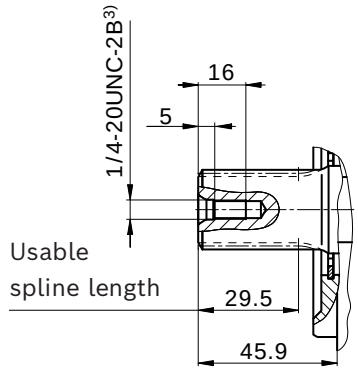

▼ **Conical keyed shaft with threaded spigot, metric[9)] (22-3(B) similar to ISO 3019-1)**

C

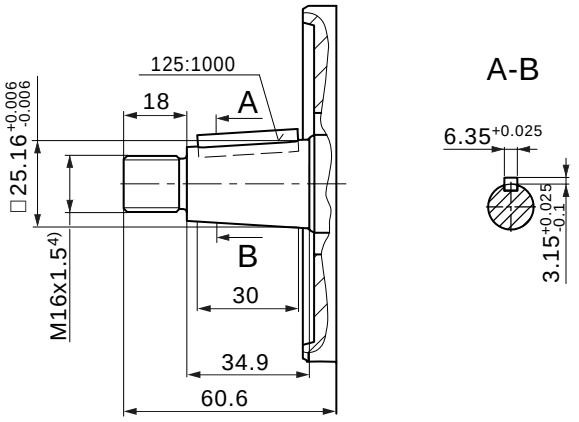

▼ **Splined shaft 7/8 in (22-4(B) similar to ISO 3019-1)**

W – 13T 16/32DP[1)2)]

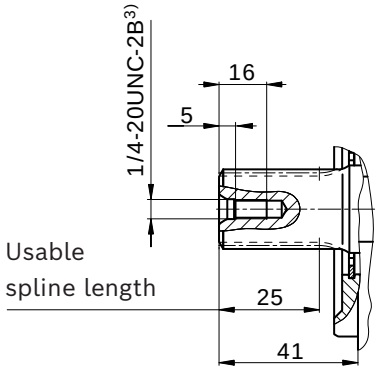

Ports		Standard	Size	p_{max} [bar (psi)][5)]	State[8)]
Port plate 10; 11					
A, **B**	Working port (high-pressure series) Fastening thread	ISO 6162-2 DIN 13	3/4 in M10 × 1.5; 17 (0.67) deep	350 (5100)	O
Port plate 60; 61					
A, **B**	Working port (high-pressure series) Fastening thread	ISO 6162-2 ASME B1.1	3/4 in 3/8-16UNC-2B 21 (0.83) deep	350 (5100)	O
Port plate 16					
A, **B**	Working port	DIN 3852-1	M27 × 2; 17 (0.67) deep	350 (5100)	O
Port plate 66					
A, **B**	Working port	ISO 11026	1 1/16-12UN-2B; 20 (0.79) deep	350 (5100)	O
Other ports					
L	Drain port	ISO 11926[6)]	7/8-14UNF-2B; 17 (0.67) deep	4 (60)	O[7)]
$\mathbf{L_1}$	Drain port	ISO 11926[6)]	7/8-14UNF-2B; 17 (0.67) deep	4 (60)	X[7)]

1) Involute spline according to ANSI B92.1a, 30° pressure angle, flat root, side fit, tolerance class 5
2) Spline runout is a deviation from the ISO 3019-1 standard.
3) Thread according to ASME B1.1
4) Thread according to DIN 13
5) Depending on the application, momentary pressure peaks can occur. Keep this in mind when selecting measuring devices and fittings.
6) The countersink may be deeper than specified in the standard.
7) Depending on the installation position, **L** or $\mathbf{L_1}$ must be connected (see also installation instructions on pages 36).
8) O = Must be connected (plugged on delivery)
X = Plugged (in normal operation)
9) UNF threaded spigot on request

A10FM - Dimensions, size 58 to 63

Port plate 10(60)N000

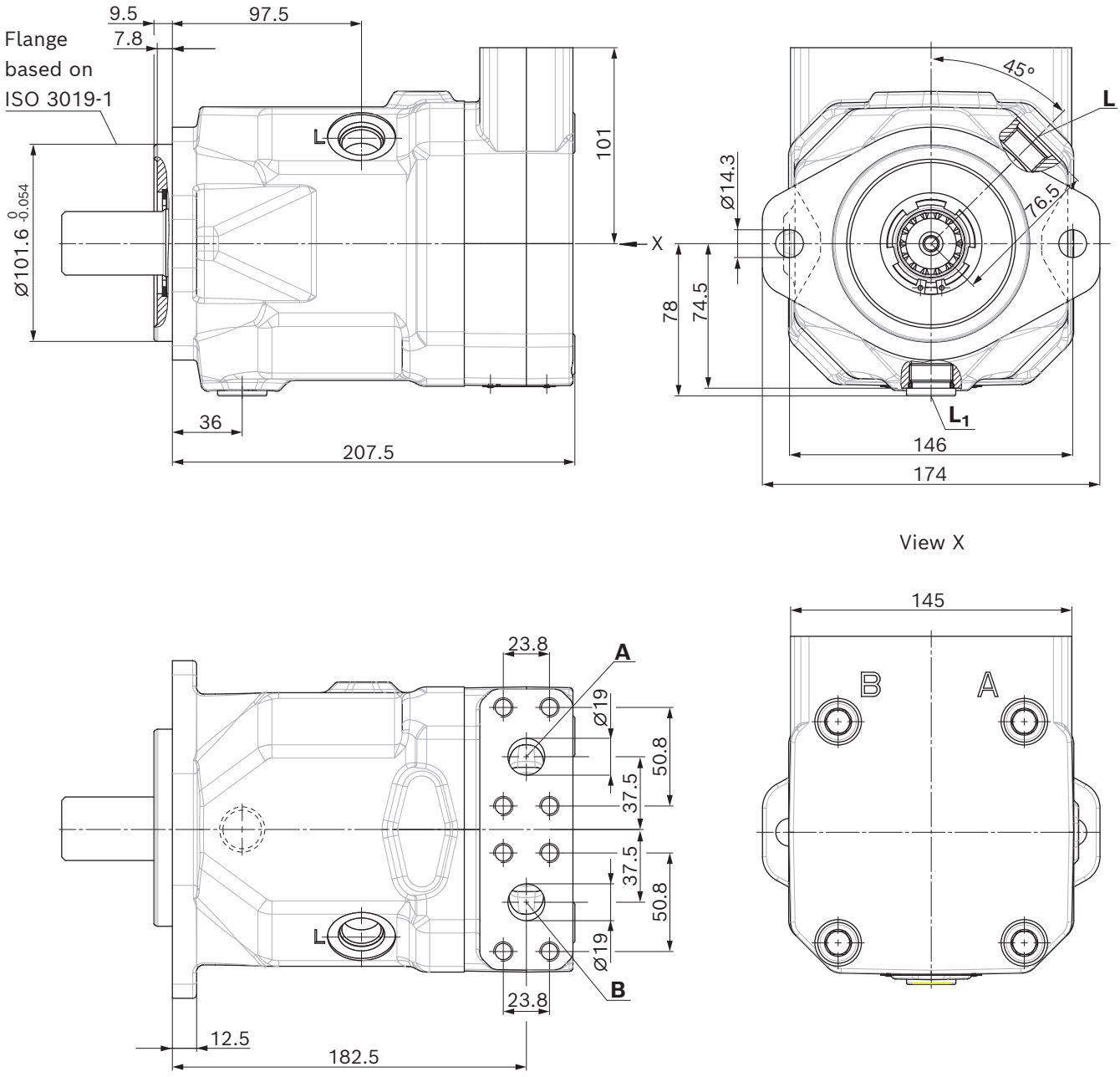

A10FM - Dimensions, size 58 to 63

Port plate 16(66)N000

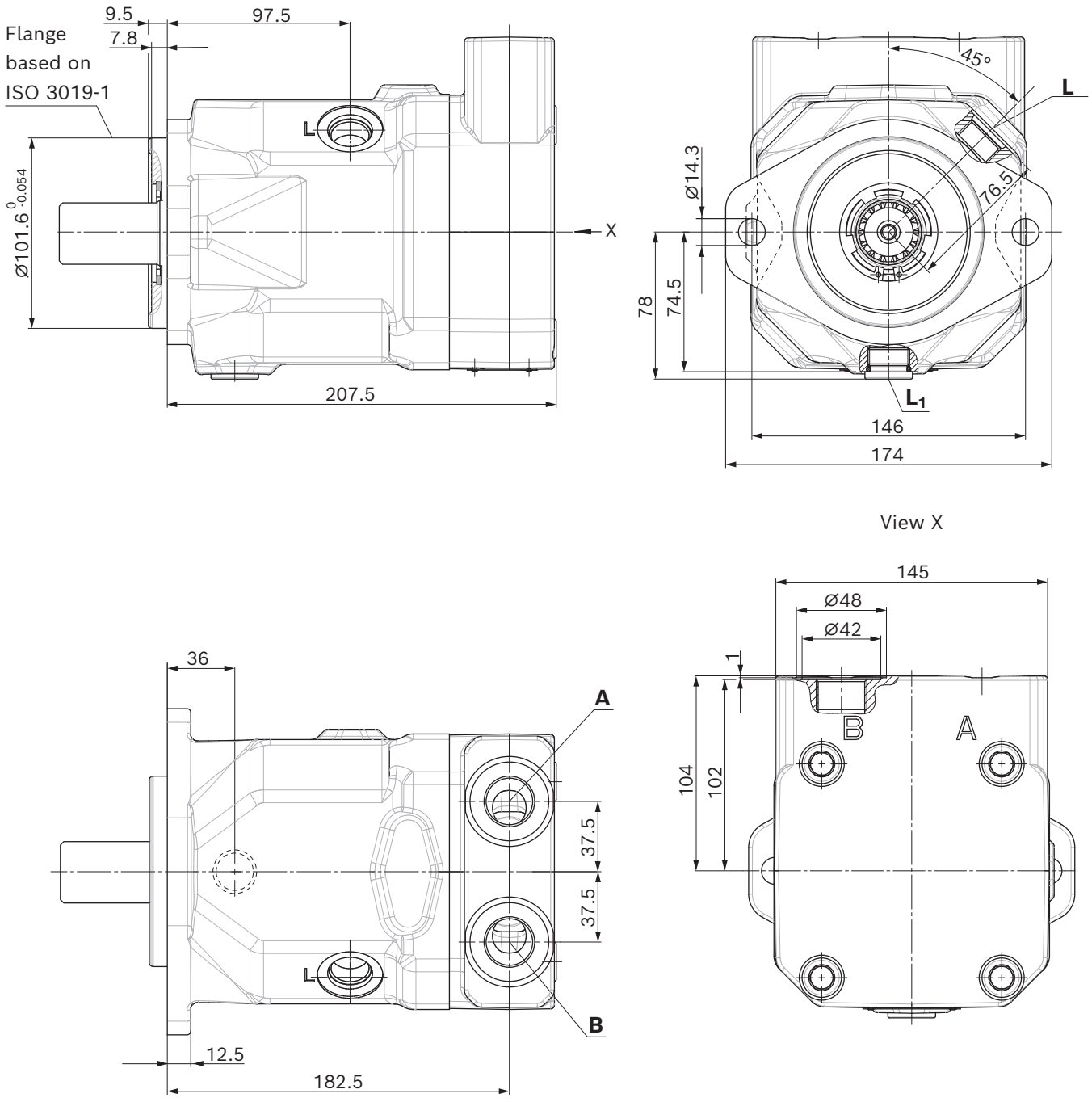

▼ **Splined shaft 1 1/4 in (32-4(C) similar to ISO 3019-1)**

R – 14T 12/24DP[1)2)]

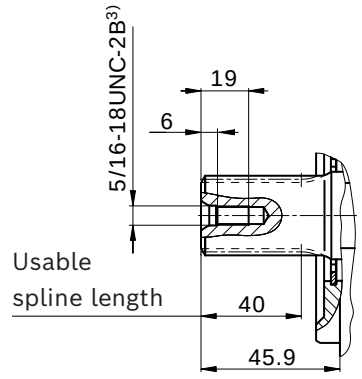

▼ **Conical keyed shaft with threaded spigot, UNF (32-3(C) similar to ISO 3019-1)**

C

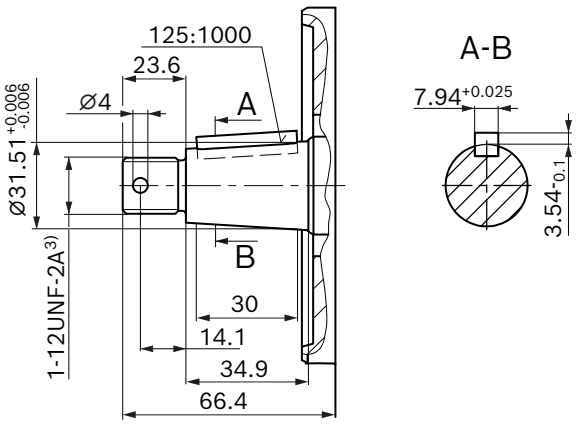

▼ **Splined shaft 1 in (25-4(B-B) similar to ISO 3019-1)**

W – 15T 16/32DP[1)2)]

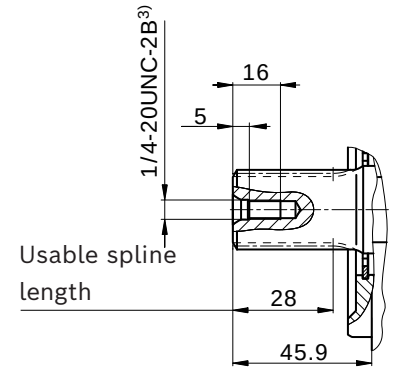

Ports		Standard	Size	p_{max} [bar (psi)][4)]	State[7)]
Port plate 10					
A, **B**	Working port (high-pressure series) Fastening thread	ISO 6162-2 DIN 13	3/4 in M10 × 1.5; 17 (0.67) deep	350 (5100)	O
Port plate 60					
A, **B**	Working port (high-pressure series) Fastening thread	ISO 6162-2 ASME B1.1	3/4 in 3/8-16UNC-2B 21 (0.83) deep	350 (5100)	O
Port plate 16					
A, **B**	Working port	DIN 3852-1	M27 × 2; 16 (0.63) deep	350 (5100)	O
Port plate 66					
A, **B**	Working port	ISO 11926	1 1/16-12UN-2B; 20 (0.79) deep	350 (5100)	O
Other ports					
L	Drain port	ISO 11926[5)]	7/8-14UNF-2B; 17 (0.67) deep	4 (60)	O[6)]
$\mathbf{L_1}$	Drain port	ISO 11926[5)]	7/8-14UNF-2B; 17 (0.67) deep	4 (60)	X[6)]

1) Involute spline according to ANSI B92.1a, 30° pressure angle, flat root, side fit, tolerance class 5
2) Spline runout is a deviation from the ISO 3019-1 standard.
3) Thread according to ASME B1.1
4) Depending on the application, momentary pressure peaks can occur. Keep this in mind when selecting measuring devices and fittings.
5) The countersink may be deeper than specified in the standard.
6) Depending on the installation position, **L** or $\mathbf{L_1}$ must be connected (see also installation instructions on pages 36).
7) O = Must be connected (plugged on delivery)
X = Plugged (in normal operation)

A10FE - Dimensions, size 10

Port plate 16(66)N000

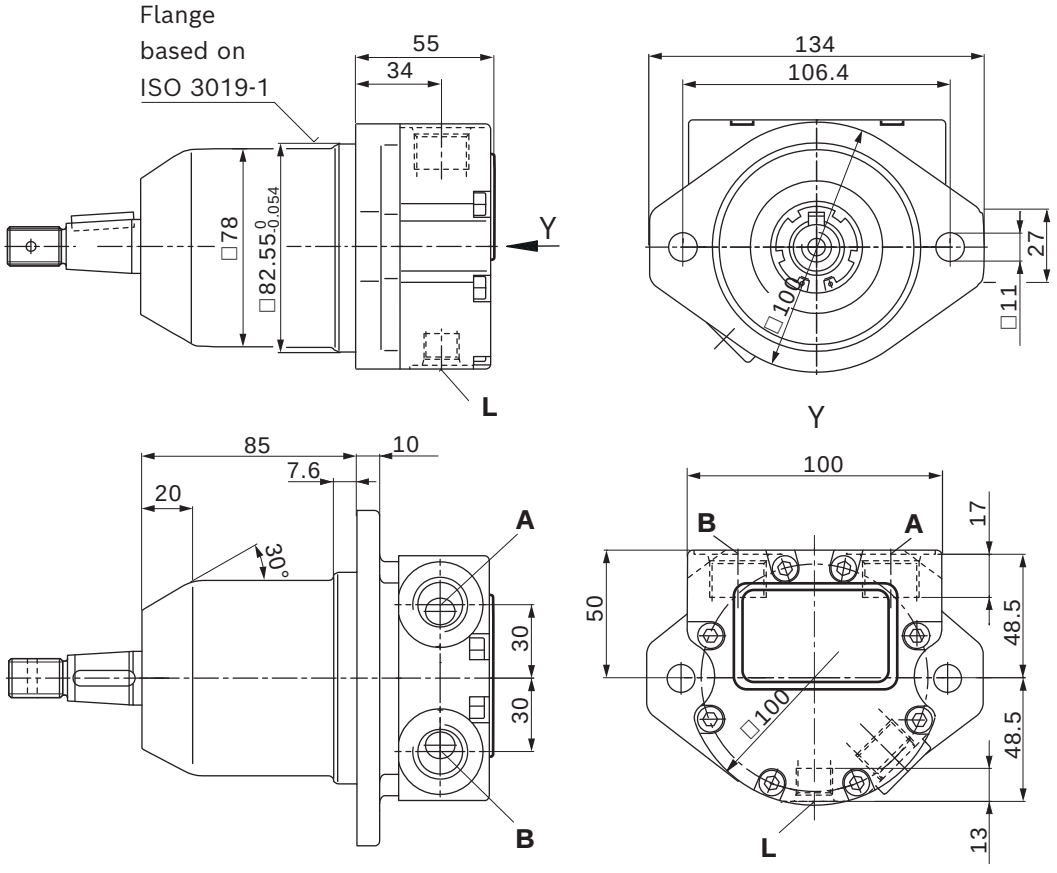

▼ **Conical keyed shaft with threaded spigot, UNF (22-3(B) similar to ISO 3019-1)**

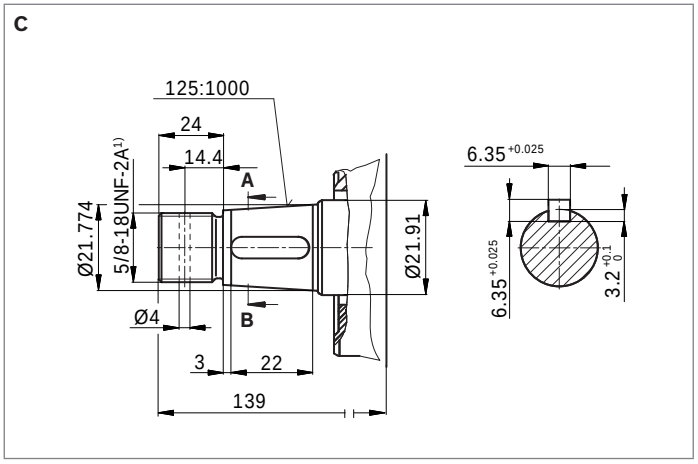

Ports		Standard	Size	p_{max} [bar (psi)][2)]	State[5)]
Port plate 16					
A, **B**	Working port	DIN 3852-1	M18 × 1.5; 12 (0.47) deep	350 (5100)	O
L	Drain port	DIN 3852-1[3)]	M14 × 1.5; 12 (0.47) deep	4 (60)	O[4)]
Port plate 66					
A, **B**	Working port	ISO 11926	7/8-14 UNF-2B; 17 (0.67) deep	350 (5100)	O
L	Drain port	ISO 11926[3)]	9/16-18 UNF-2B; 13 (0.51) deep	4 (60)	O[4)]

1) Thread according to ASME B1.1
2) Depending on the application, momentary pressure peaks can occur. Keep this in mind when selecting measuring devices and fittings.
3) The countersink may be deeper than specified in the standard.
4) **L** must be connected (see also installation instructions on page 36).
5) O = Must be connected (plugged on delivery)

A10FE - Dimensions, size 11 to 18

Port plate 16(66)N000

Mounting flange H

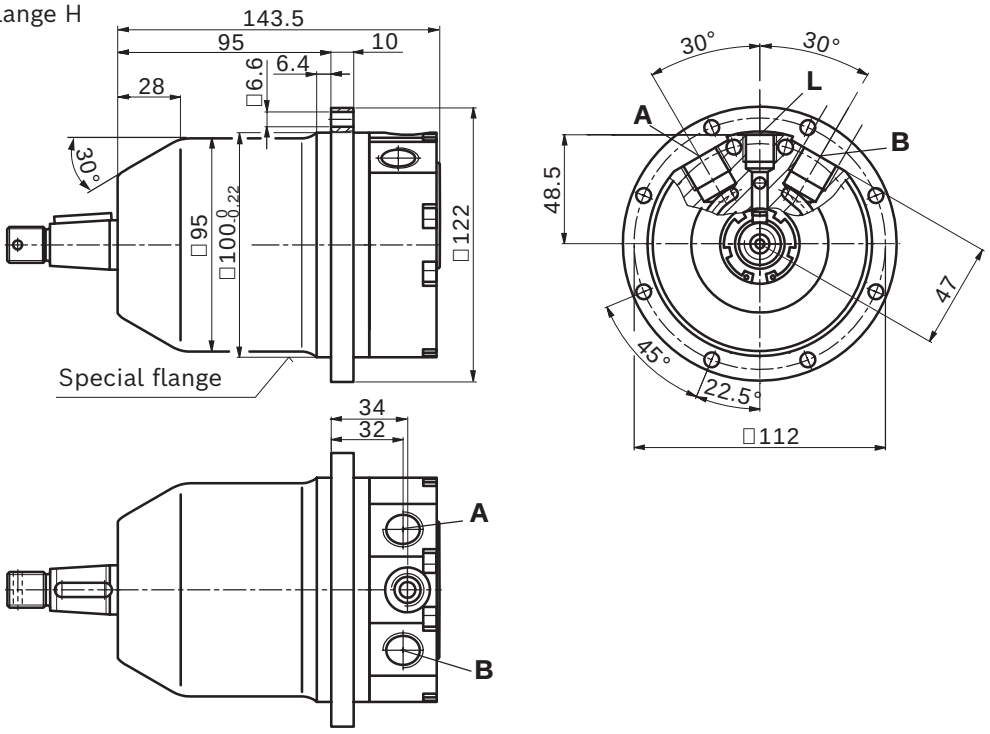

Mounting flange C

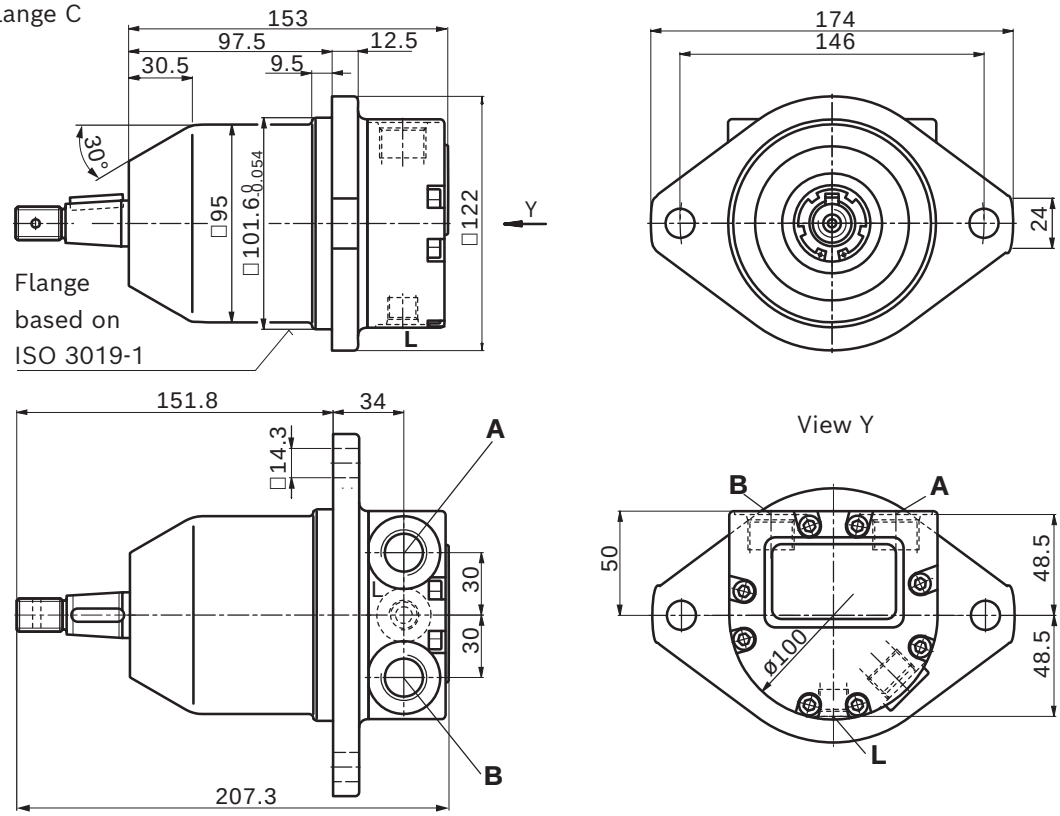

▼ **Splined shaft (19-4 (A-B) similar to ISO 3019-1)**

R – 3/4 in 11T 16/32DP[1)2)]

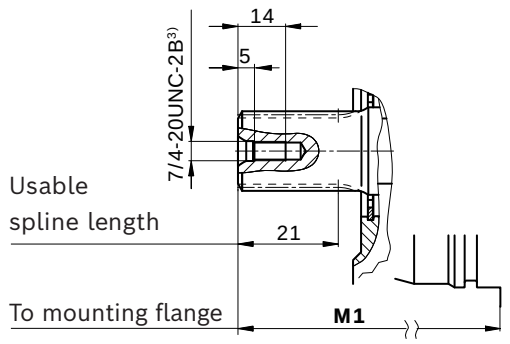

Mounting flange	M1
H	126.6 (0.65)
C	109.2 (4.30)

▼ **Conical keyed shaft with threaded spigot, UNF (22-3(B) similar to ISO 3019-1)**

C

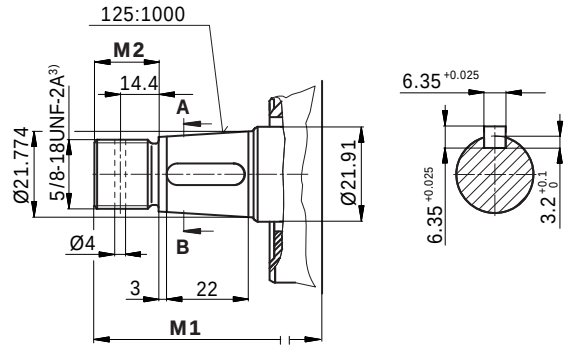

Mounting flange	M1	M2
H	144.2 (5.68)	19 (0.75)
C	151.8 (5.98)	24 (0.94)

Ports		Standard	Size	p_{max} [bar (psi)][4)]	State[7)]
Port plate 16					
A, **B**	Working port	DIN 3852-1	M18 × 1.5; 12 (0.51) deep	350 (5100)	O
L	Drain port	DIN 3852-1	M14 × 1.5; 12 (0.51) deep	4 (60)	O[6)]
Port plate 66					
	with mounting flange H				
A, **B**	Working port	ISO 11926	3/4-16 UNF-2B; 15 (0.59) deep	350 (5100)	O
	with mounting flange C				
	Working port	ISO 11926	7/8-14 UNC-2B; 17 (0.67) deep	350 (5100)	O
L	Drain port	ISO 11926[5)]	9/16-18 UNF-2B; 13 (0.51) deep	4 (60)	O[6)]

1) Involute spline according to ANSI B92.1a, 30° pressure angle, flat root, side fit, tolerance class 5
2) Spline runout is a deviation from the ISO 3019-1 standard.
3) Thread according to ASME B1.1
4) Depending on the application, momentary pressure peaks can occur. Keep this in mind when selecting measuring devices and fittings.
5) The countersink may be deeper than specified in the standard.
6) **L** must be connected (see also installation instructions on page 36).
7) O = Must be connected (plugged on delivery)

A10FE - Dimensions, size 23 to 28

Port plate 10(60)N000

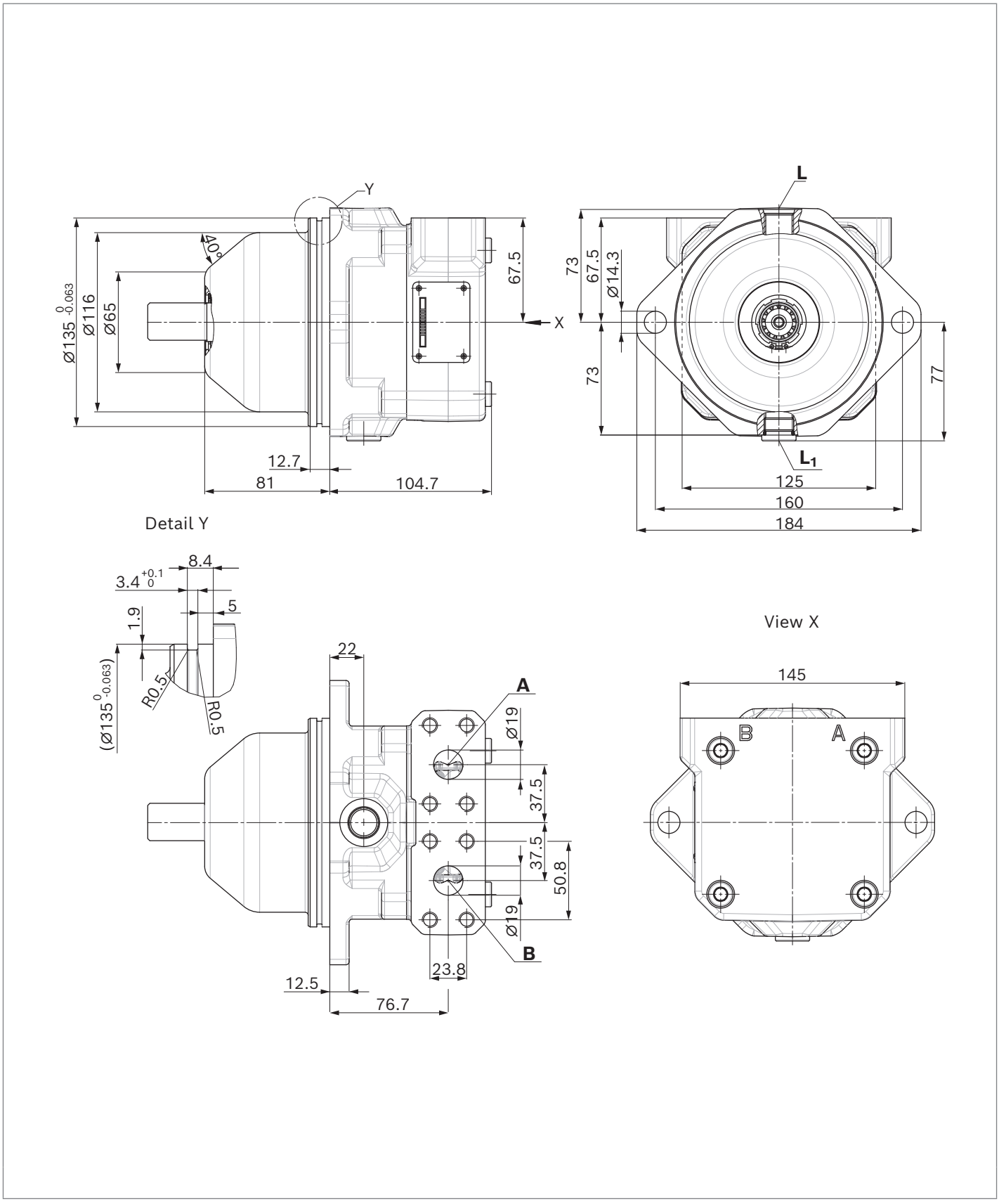

A10FE - Dimensions, size 23 to 28

Port plate 16(66)N000

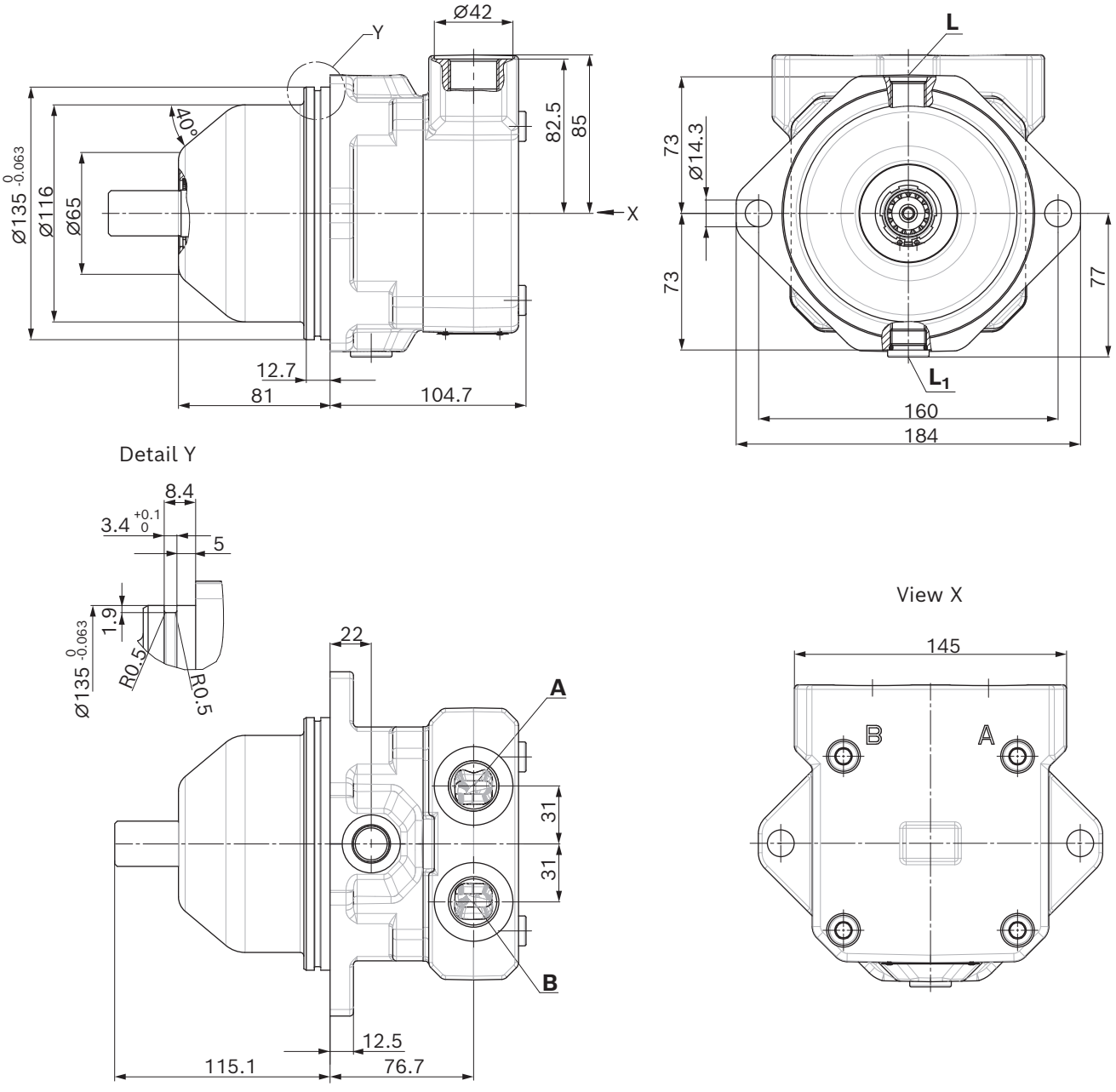

▼ **Splined shaft (22-4(B) similar to ISO 3019-1)**

R – 7/8 in 13T 16/32DP[1)2)]

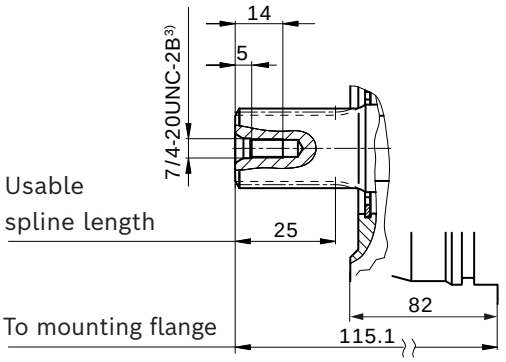

▼ **Conical keyed shaft with threaded spigot, UNF (22-3(B) similar to ISO 3019-1)**

C

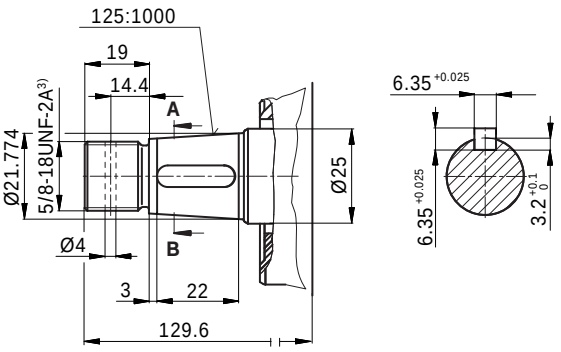

Ports		Standard	Size	p_{max} [bar (psi)][4)]	State[7)]
Port plate 10					
A, **B**	Working port (high-pressure series) Fastening thread	ISO 6162-2 DIN 13	3/4 in M10 × 1.5; 17 (0.47) deep	350 (5100)	O
Port plate 60					
A, **B**	Working port (high-pressure series) Fastening thread	ISO 6162-2 ASME B1.1	3/4 in 3/8-16UNC-2B 21 (0.83) deep	350 (5100)	O
Port plate 16					
A, **B**	Working port	DIN 3852-1	M27 × 2; 16 (0.63) deep	350 (5100)	O
Port plate 66					
A, **B**	Working port	ISO 11926	1 1/16-12UN-2B; 20 (0.79) deep	350 (5100)	O
Other ports					
L	Drain port	ISO 11926[5)]	3/4-16UNF-2B; 15 (0.59) deep	4 (60)	O[6)]
$\mathbf{L}_1$	Drain port	ISO 11926[5)]	3/4-16UNF-2B; 15 (0.59) deep	4 (60)	X[6)]

1) Involute spline according to ANSI B92.1a, 30° pressure angle, flat root, side fit, tolerance class 5
2) Spline runout is a deviation from the ISO 3019-1 standard.
3) Thread according to ASME B1.1
4) Depending on the application, momentary pressure peaks can occur. Keep this in mind when selecting measuring devices and fittings.
5) The countersink may be deeper than specified in the standard.
6) Depending on the installation position, **L** or $\mathbf{L}_1$ must be connected (see also installation instructions on pages 36).
7) O = Must be connected (plugged on delivery)
X = Plugged (in normal operation)

A10FE - Dimensions, size 37 to 45

Port plate 10(60)N000

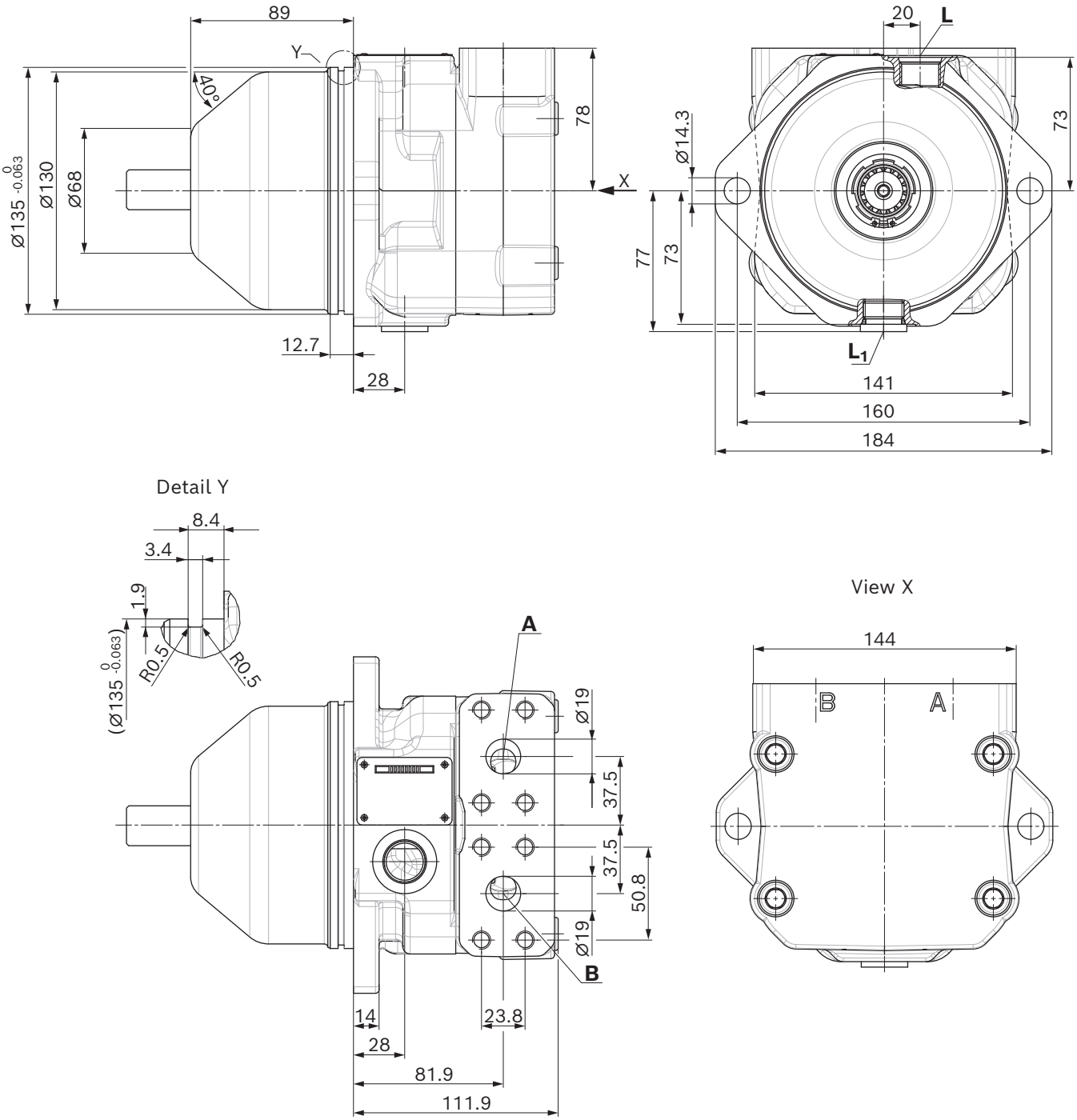

A10FE - Dimensions, size 37 to 45

Port plate 16(66)N000

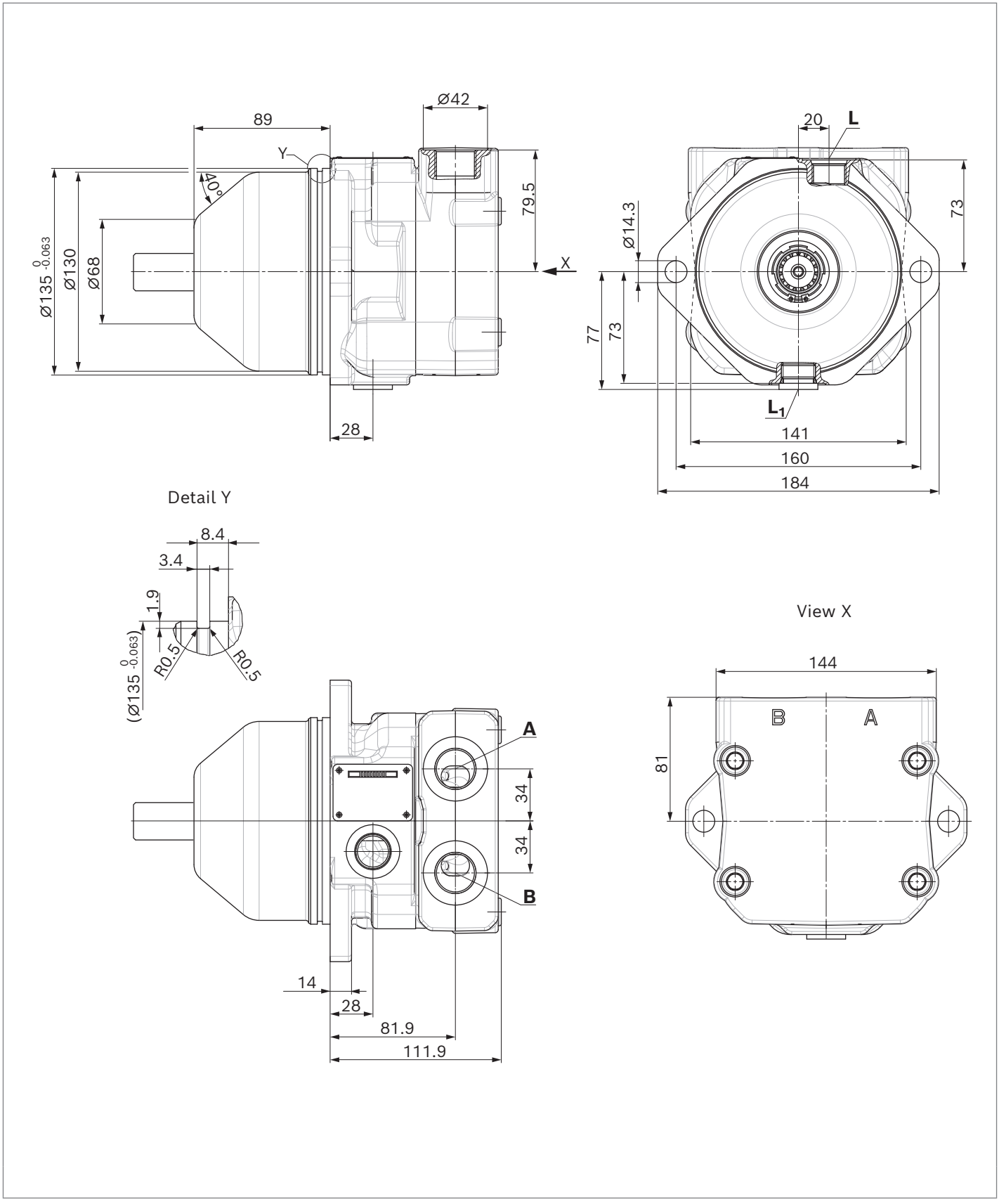

▼ **Splined shaft 1 in (25-4(B-B) similar to ISO 3019-1)**

R – 15T 16/32DP[1)2)]

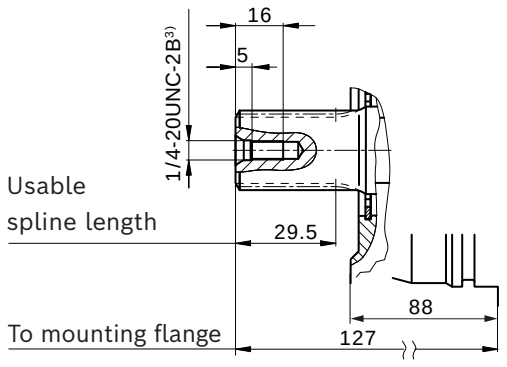

▼ **Conical keyed shaft with threaded spigot, metric[9)] (25-3(B-B) similar to ISO 3019-1)**

C

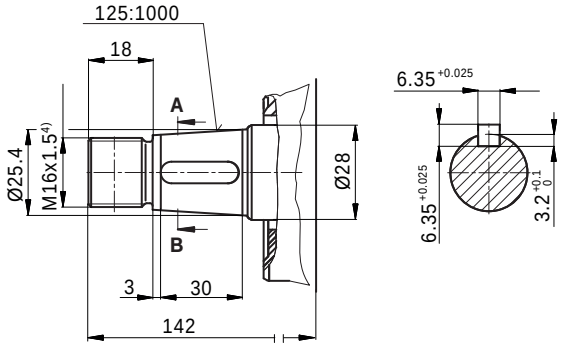

▼ **Splined shaft 7/8 in (22-4(B) similar to ISO 3019-1)**

W – 13T 16/32DP[1)2)]

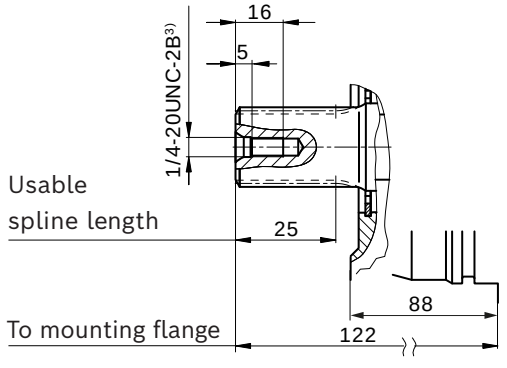

Ports		Standard	Size	p_{max} [bar (psi)][5)]	State[8)]
Port plate 10					
A, **B**	Working port (high-pressure series) Fastening thread	ISO 6162-2 DIN 13	3/4 in M10 × 1.5; 17 (0.67) deep	350 (5100)	O
Port plate 60					
A, **B**	Working port (high-pressure series) Fastening thread	ISO 6162-2 ASME B1.1	3/4 in 3/8-16UNC-2B 21 (0.83) deep	350 (5100)	O
Port plate 16					
A, **B**	Working port	DIN 3852-1	M27 × 2; 17 (0.67) deep	350 (5100)	O
Port plate 66					
A, **B**	Working port	ISO 11926	1 1/16-12UN-2B; 20 (0.79) deep	350 (5100)	O
Other ports					
L	Drain port	ISO 11926[6)]	7/8-14UNF-2B; 17 (0.67) deep	4 (60)	O[7)]
$\mathbf{L_1}$	Drain port	ISO 11926[6)]	7/8-14UNF-2B; 17 (0.67) deep	4 (60)	X[7)]

1) Involute spline according to ANSI B92.1a, 30° pressure angle, flat root, side fit, tolerance class 5
2) Spline runout is a deviation from the ISO 3019-1 standard.
3) Thread according to ASME B1.1
4) Thread according to DIN 13
5) Depending on the application, momentary pressure peaks can occur. Keep this in mind when selecting measuring devices and fittings.
6) The countersink may be deeper than specified in the standard.
7) Depending on the installation position, **L** or $\mathbf{L_1}$ must be connected (see also installation instructions on pages 36).
8) O = Must be connected (plugged on delivery)
X = Plugged (in normal operation)
9) UNF threaded spigot on request

A10FE - Dimensions, size 58 to 63

Port plate 10(60)N000

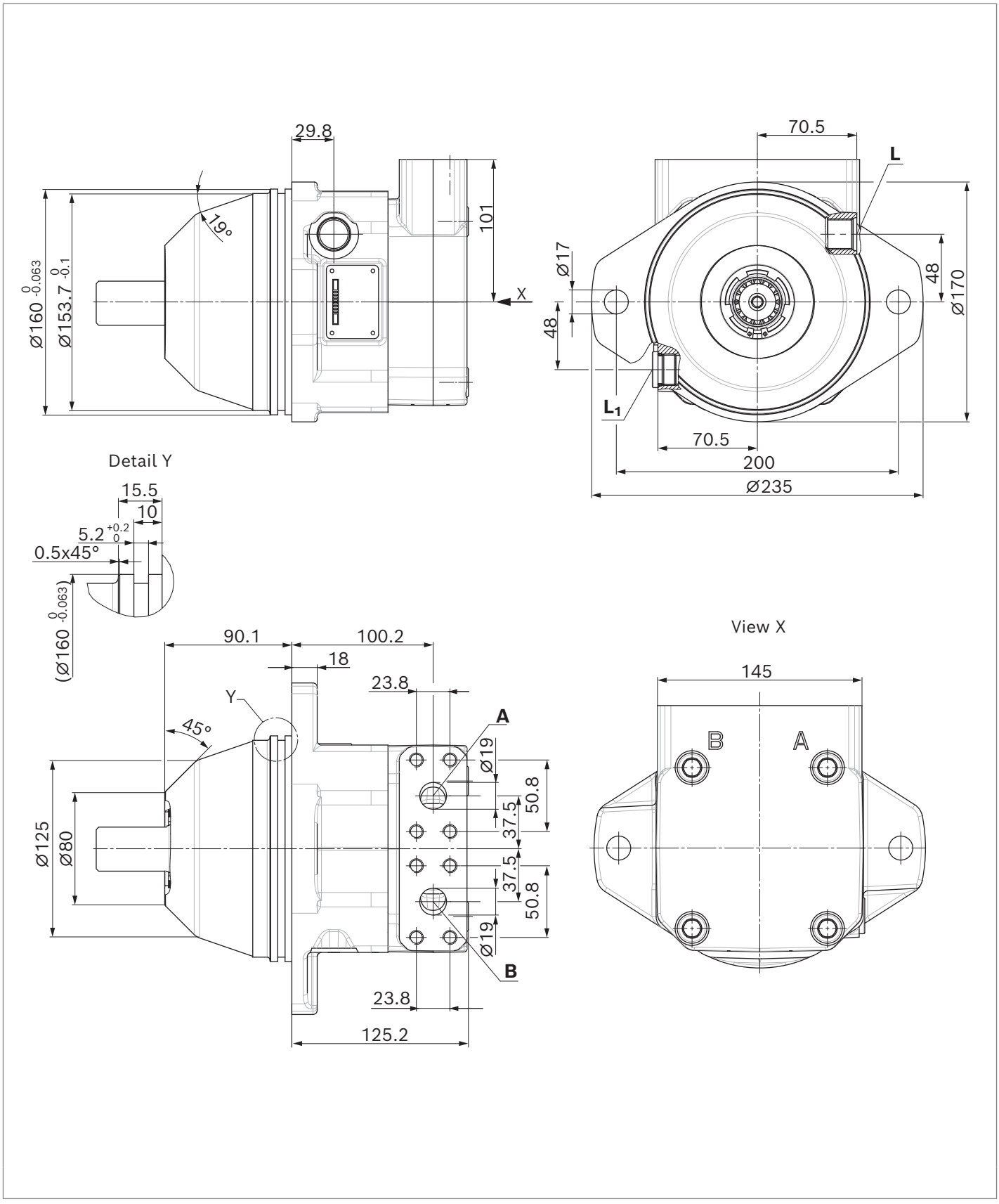

A10FE - Dimensions, size 58 to 63

Port plate 16(66)N000

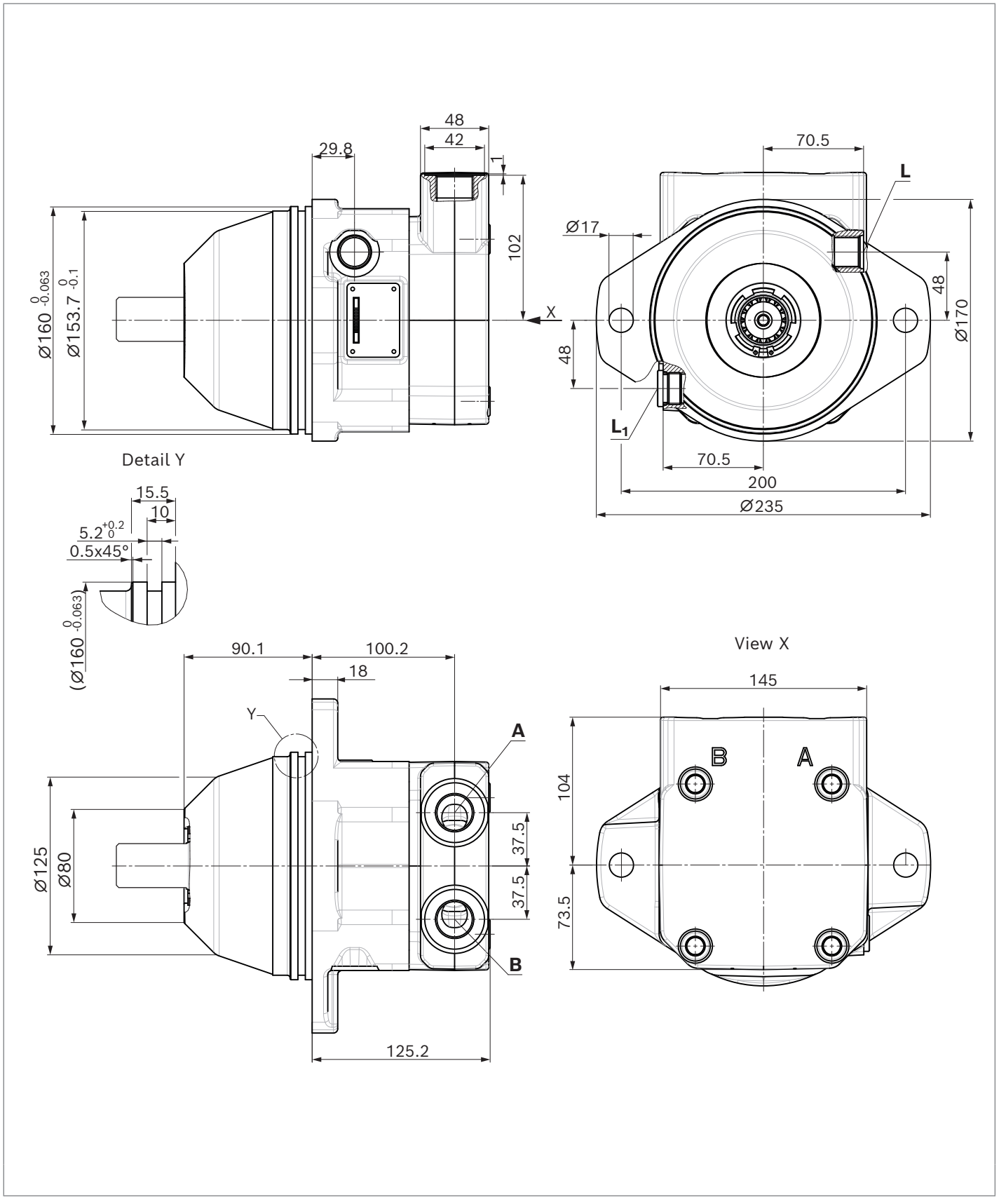

▼ **Splined shaft 1 1/4 in (32-4(C) similar to ISO 3019-1)**

R – 14T 12/24DP[1)2)]

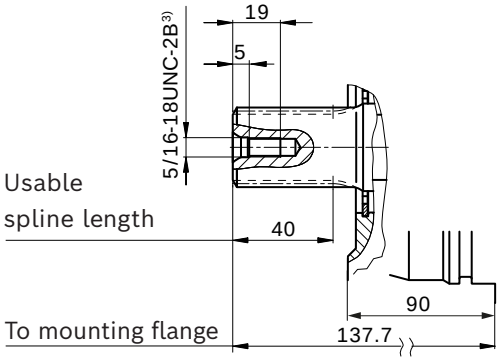

▼ **Conical keyed shaft with threaded spigot, UNF (32-3(C) similar to ISO 3019-1)**

C

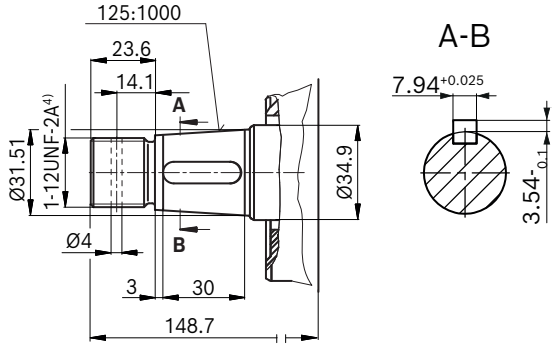

▼ **Splined shaft 1 in (25-4(B-B) similar to ISO 3019-1)**

W – 15T 16/32DP[1)2)]

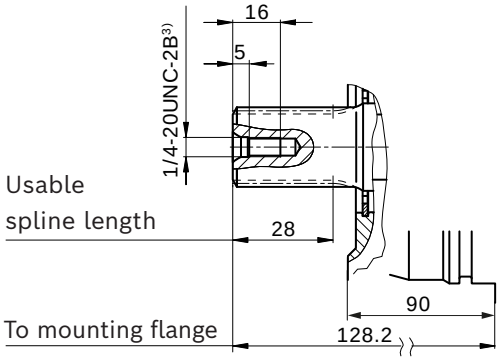

Ports		Standard	Size	p_{max} [bar (psi)][4)]	State[7)]
Port plate 10					
A, **B**	Working port (high-pressure series) Fastening thread	ISO 6162-2 DIN 13	3/4 in M10 × 1.5; 17 (0.67) deep	350 (5100)	O
Port plate 60					
A, **B**	Working port (high-pressure series) Fastening thread	ISO 6162-2 ASME B1.1	3/4 in 3/8-16UNC-2B 21 (0.83) deep	350 (5100)	O
Port plate 16					
A, **B**	Working port	DIN 3852-1	M27 × 2; 16 (0.63) deep	350 (5100)	O
Port plate 66					
A, **B**	Working port	ISO 11926	1 1/16-12UN-2B; 20 (0.79) deep	350 (5100)	O
Other ports					
L	Drain port	ISO 11926[5)]	7/8-14UNF-2B; 17 (0.67) deep	4 (60)	O[6)]
$\mathbf{L_1}$	Drain port	ISO 11926[5)]	7/8-14UNF-2B; 17 (0.67) deep	4 (60)	X[6)]

1) Involute spline according to ANSI B92.1a, 30° pressure angle, flat root, side fit, tolerance class 5
2) Spline runout is a deviation from the ISO 3019-1 standard.
3) Thread according to ASME B1.1
4) Depending on the application, momentary pressure peaks can occur. Keep this in mind when selecting measuring devices and fittings.
5) The countersink may be deeper than specified in the standard.
6) Depending on the installation position, **L** or $\mathbf{L_1}$ must be connected (see also installation instructions on pages 36).
7) O = Must be connected (plugged on delivery)
X = Plugged (in normal operation)

Flushing and boost-pressure valve

Order option N007

In a closed circuit, the integrated flushing and boost-pressure valve is used for heat dissipation and to safeguard the minimum boost pressure.
Hydraulic fluid is directed from the respective low-pressure side into the motor housing. This is then fed into the reservoir, together with the leakage.
The removed hydraulic fluid must be replaced by cooled hydraulic fluid supplied by the boost pump.
The valve is integrated in the port plate.

Notice

- Cracking pressure of pressure retention valve
  Fixed at 16 bar (230 psi)
  (observe primary valve setting)

▼ **Circuit diagram**

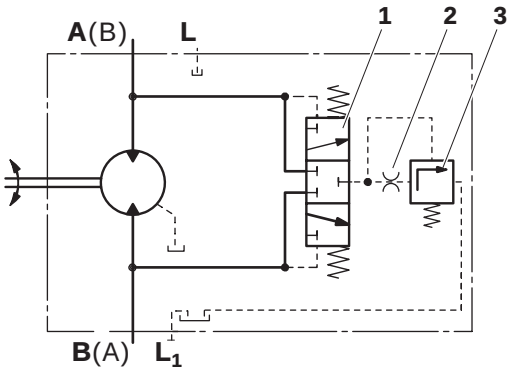

Item	Component
1	Flushing spool
2	Orifice
3	Pressure retention valve

Flushing flow q_V

Orifices can be used to adjust the flushing flows as required.
The following information is based on:
$\Delta p_{ND} = p_{ND} - p_G$ = 20 bar (290 psi) and ν = 10 mm²/s (cSt)
(p_{ND} = low pressure, p_G = case pressure)
The standard flushing flow is 5.5 l/min (1.5 gpm) with orifice ⌀ 1.6 mm (DIA 0.063 inch). When ordering, please state other orifice diameter sizes in plain text.

Orifice diameter [mm (inch)]	Flushing flow q_v [l/min (gpm)]
1.2 (0.47)	3.5 (0.9)
1.6 (0.63)	5.5 (1.5)
2 (0.79)	9 (2.4)

▼ **Dimensions A10FM and A10FE**

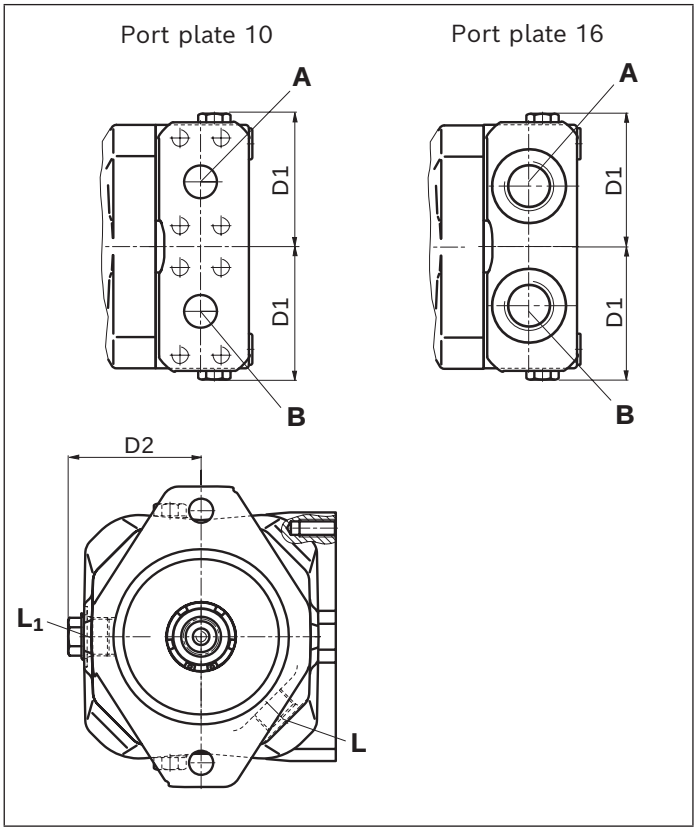

Size	D_1 [mm (inch)]	D_2 [mm (inch)]
23/28	72	72
	(2.83)	(2.83)
37/45	77	77
	(3.03)	(3.03)
68/63	77	82
	(3.03)	(3.23)

Anti cavitation valve

Order option N002

When switching off the system, the anti cavitation valve ensures the motor of heavy-duty drives (e.g., hydrostatic fan drives) is supplied with hydraulic fluid until it comes to a standstill.

The valve is integrated in the port plate.

Notice

- The direction of rotation is to be determined as either clockwise or counter-clockwise in the project planning.

The external dimensions of the motor with anti cavitation valve correspond to the standard version.

▼ **Circuit diagram**

Clockwise rotation	**Counter-clockwise** rotation
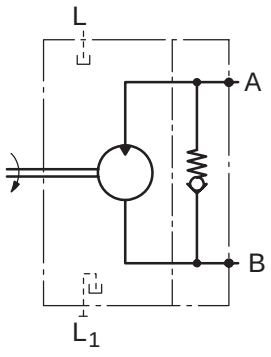	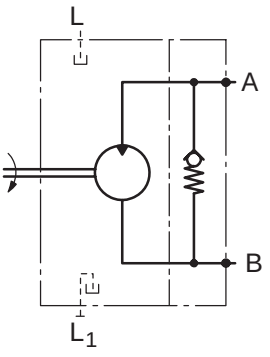

Prepared for speed sensor

Order option W

The version A10FM/A10FE...W is prepared for the installation of a speed sensor DST or DSA1/20 and DSA2/20 and is equipped with a spline on the rotary group. This spline can be scanned by a sensor and thus a signal proportional to the rotational speed can be generated.
On delivery, the fixture for the speed sensor is plugged with a pressure-resistant cover.

▼ **Circuit diagram**

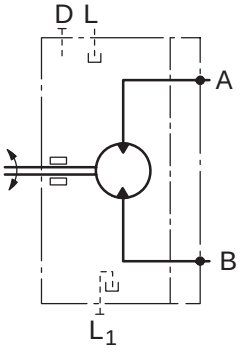

▼ **Dimension A10FM**

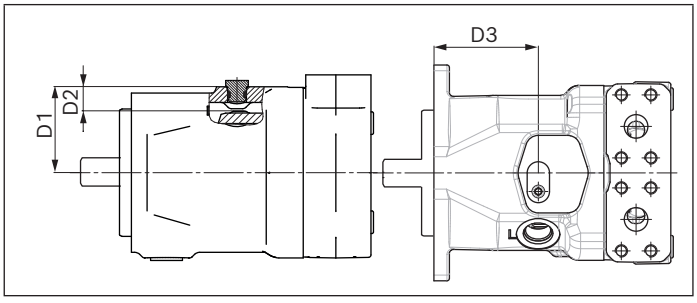

A10FM Size	Number of teeth	D1 mm (inch)	D2 mm (inch)	D3 mm (inch)	Fastening thread
23, 28	48	64.8	19.3	101.8	M6 × 1 At least 9 mm deep
		(2.55)	(0.76)	(4.01)	
37, 45	48	68.5	19.5	86.2	
		(2.70)	(0.77)	(3.39)	
58, 63	56	75.2	19.5	128.5	
		(2.96)	(0.77)	(5.06)	

▼ **Dimension A10FE**

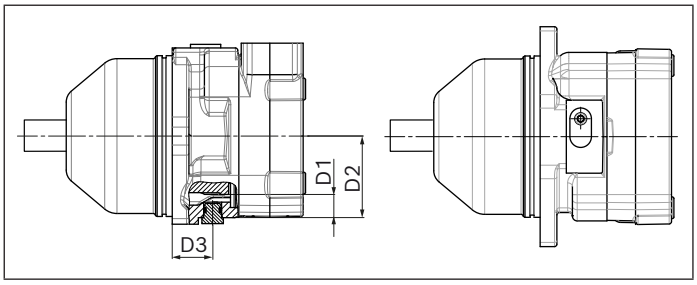

A10FE Size	Number of teeth	D1 mm (inch)	D2 mm (inch)	D3 mm (inch)	Fastening thread
23, 28	48	64.8	19.3	27.7	M6 × 1 At least 9 mm deep
		(2.55)	(0.76)	(1.09)	
37, 45	48	68.5	19.5	33.9	
		(2.70)	(0.77)	(1.33)	
58, 63	56	75.2	19.5	46.2	
		(2.96)	(0.77)	(1.82)	

Speed sensing

Order option ... E, C and K

The mounted speed sensor DST (E) or DSA1/20 (C) and DSA2/20 (K) can record both the rotational speed and the direction of rotation of the motor.
Additionally, the sensors also feature an NTC thermistor, which enables measuring the temperature in the installation location of the sensor.
Type code, technical data, dimensions and information on the connector, plus safety instructions about the sensor can be found in the relevant data sheet 95131 (DST) or 95126 (DSAx/20).

Notice

- Painting the sensor with electrostatic charge is not permitted (danger: ESD damage).

Electrostatic discharge

ISO 10605:2008

- Contact discharge (probe touches the sensor) ±8 kV (sensor operated actively and passively)
- Air discharge (arc between probe and sensor) ±15 kV (sensor operated actively and passively)

▼ **Circuit diagram**

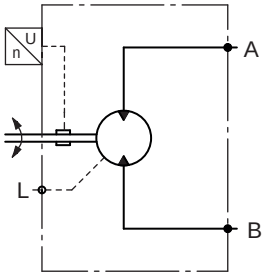

▼ **Pin assignment, speed sensor DSA1 and DSA2**
Order option C and K

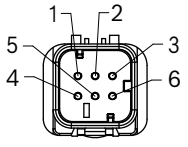

1 Supply voltage
2 Ground
3 S1 frequency
4 Direction of rotation
5 Temperature sensor
6 Temperature sensor

▼ **Pin assignment, speed sensor DST**
Order option E

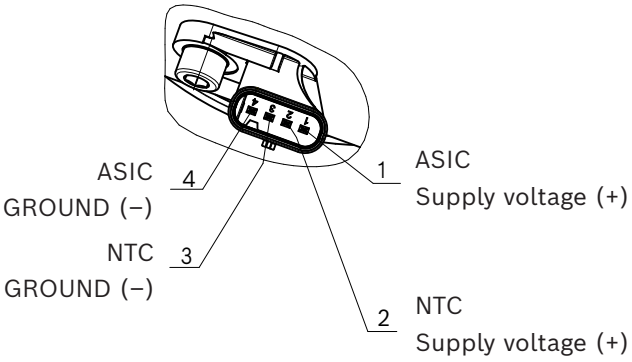

▼ **Dimension A10FM with speed sensor DSAx and DST**

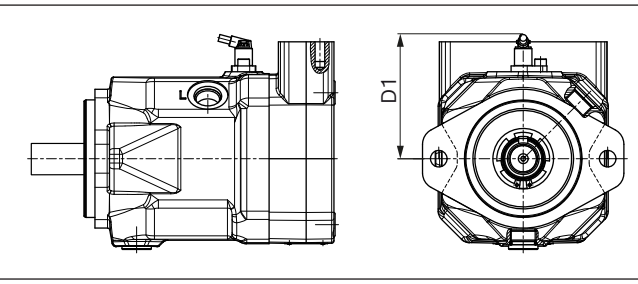

A10FM				
Size		23, 28	37, 45	58, 63
D1 / DSAx	mm	97	100.6	107
(Code C, K)	(inch)	(3.82)	(3.96)	(4.21)
D1 / DST	mm	89	92	99
(Code E)	(inch)	(3.50)	(3.62)	(3.90)

▼ **Dimension A10FE with speed sensor DSAx and DST**

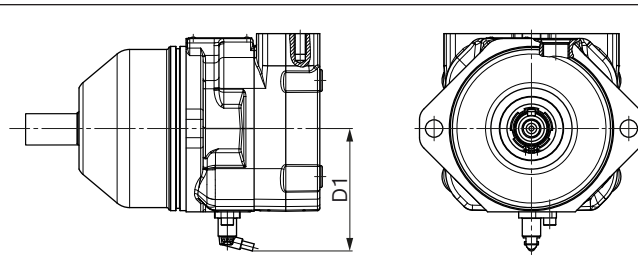

A10FE				
Size		23, 28	37, 45	58, 63
D1 / DSAx	mm	97	100.6	107
(Code C, K)	(inch)	(3.82)	(3.96)	(4.21)
D1 / DST	mm	89	92	99
(Code E)	(inch)	(3.50)	(3.62)	(3.90)

Notice

For dimensions with mating connector, please contact us.

Installation instructions

General

The axial piston unit must be filled with hydraulic fluid and air bled during commissioning and operation.
This must also be observed following a longer standstill as the axial piston unit may empty via the hydraulic lines.
The leakage in the housing area must be directed to the reservoir via the highest positioned drain port (**L**, **L**$_1$).
If a shared drain line is used for several units, make sure that the respective case pressure in each unit is not exceeded. The shared drain line must be dimensioned to ensure that the maximum permissible case pressure of all connected units is not exceeded in any operating condition, particularly at cold start. If this is not possible, separate drain line must be laid, if necessary.
To prevent the transmission of structure-borne noise, use elastic elements to decouple all connecting lines from all vibration-capable components (e.g., reservoir, frame parts).
Under all operating conditions, the drain line must flow into the reservoir below the minimum fluid level.
When designing the reservoir, ensure that there is adequate distance between the suction line and the drain line. We recommend using a baffle (baffle plate) between suction line and drain line. A baffle improves the air separation ability as it gives the hydraulic fluid more time for desorption. Apart from that, this prevents the heated return flow from being drawn directly back into the suction line. The suction port must be supplied with air-free, calmed and cooled hydraulic fluid.

Key	
F	Filling / Air bleeding
L, **L**$_1$	Drain port
SB	Baffle (baffle plate)
$h_{t\ min}$	Minimum required immersion depth (200 mm (7.87 inch))
h_{min}	Minimum required distance to reservoir bottom (100 mm (3.94 inch))

Notice

Port **F** is part of the external piping and must be provided on the customer side to make filling and air bleeding easier.

Installation position

See the following examples **1** to **8**.
Further installation positions are available upon request.
Recommended installation position: **1, 3, 5** and **7**

Below-reservoir installation (standard)

Below-reservoir installation means that the axial piston unit is installed outside of the reservoir below the minimum fluid level.

▼ **Installation position 1**

Air bleeding	Filling	Air bleeding	Filling
F	**L** (**F**)	**F**	**L** (**F**)
A10 **FM**		A10 **FE**	
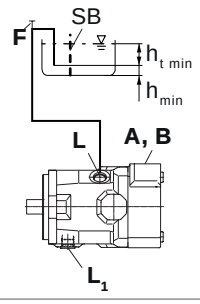		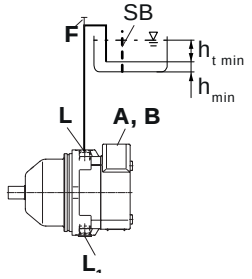	

▼ **Installation position 2**

Air bleeding	Filling	Air bleeding	Filling
F	L_1 (**F**)	**F**	L_1 (**F**)
A10 **FM**		A10 **FE**	
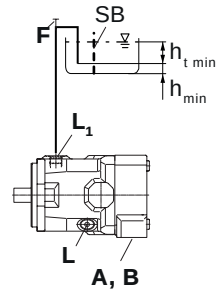		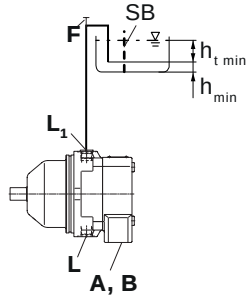	

Above-reservoir installation

Above-reservoir installation means that the axial piston unit is installed above the minimum fluid level of the reservoir.

▼ **Installation position 3**

Air bleeding	Filling	Air bleeding	Filling
F	**L** (**F**)	**F**	**L** (**F**)
A10 **FM**		A10 **FE**	
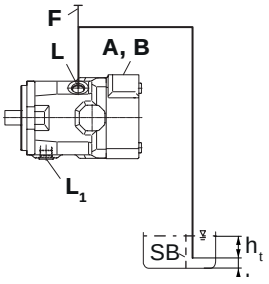		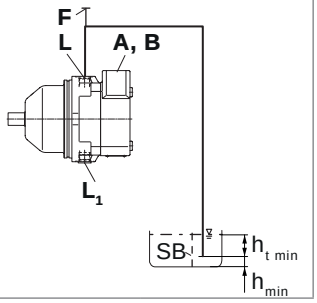	

▼ **Installation position 4**

Air bleeding	Filling	Air bleeding	Filling
F	L_1 (**F**)	**F**	L_1 (**F**)
A10 **FM**		A10 **FE**	
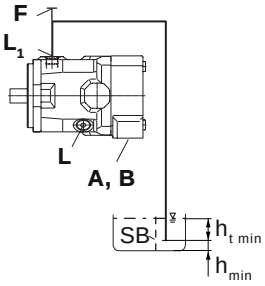		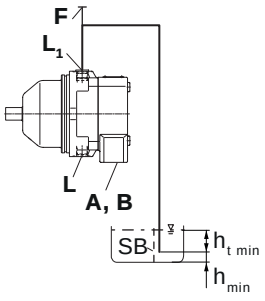	

For key, see page 36.

Project planning notes

- The axial piston variable motor, A10FM and A10FE, is intended to be used in open and closed circuits.
- The project planning, installation and commissioning of the axial piston unit requires the involvement of skilled personnel.
- Before using the axial piston unit, please read the corresponding instruction manual completely and thoroughly. If necessary, this can be requested from Bosch Rexroth.
- Before finalizing your design, please request a binding installation drawing.
- The specified data and notes contained herein must be observed.
- Depending on the operating conditions of the axial piston unit (working pressure, fluid temperature), the characteristic curve may shift.
- Preservation: Our axial piston units are supplied as standard with preservation protection for a maximum of 12 months. If longer preservation protection is required (maximum 24 months), please specify this in plain text when placing your order. The preservation periods apply under optimal storage conditions, details of which can be found in the data sheet 90312 or the instruction manual.
- Not all configuration variants of the product are approved for use in safety functions according to ISO 13849. Please consult the proper contact at Bosch Rexroth if you require reliability parameters (e.g., $MTTF_d$) for functional safety.
- A pressure relief must be provided in the hydraulic system. In this connection, observe the technical limits of the pressure relief valve.
- For drives that are operated for a long period of time with constant rotational speed, the natural frequency of the hydraulic system can be stimulated by the excitation frequency of the pump (rotational speed frequency x 9). This can be prevented with suitably designed hydraulic lines.
- Please note the details regarding the tightening torques of port threads and other threaded joints in the instruction manual.
- The ports and fastening threads are designed for the p_{max} permissible pressures of the respective ports, see the connection tables. The machine or system manufacturer must ensure that the connecting elements and lines correspond to the specified application conditions (pressure, flow, hydraulic fluid, temperature) with the necessary safety factors.
- The service ports and function ports are only intended to accommodate hydraulic lines.

Safety instructions

- During and shortly after operation, there is a risk of getting burnt on the axial piston unit. Take the appropriate safety measures (e.g. by wearing protective clothing).