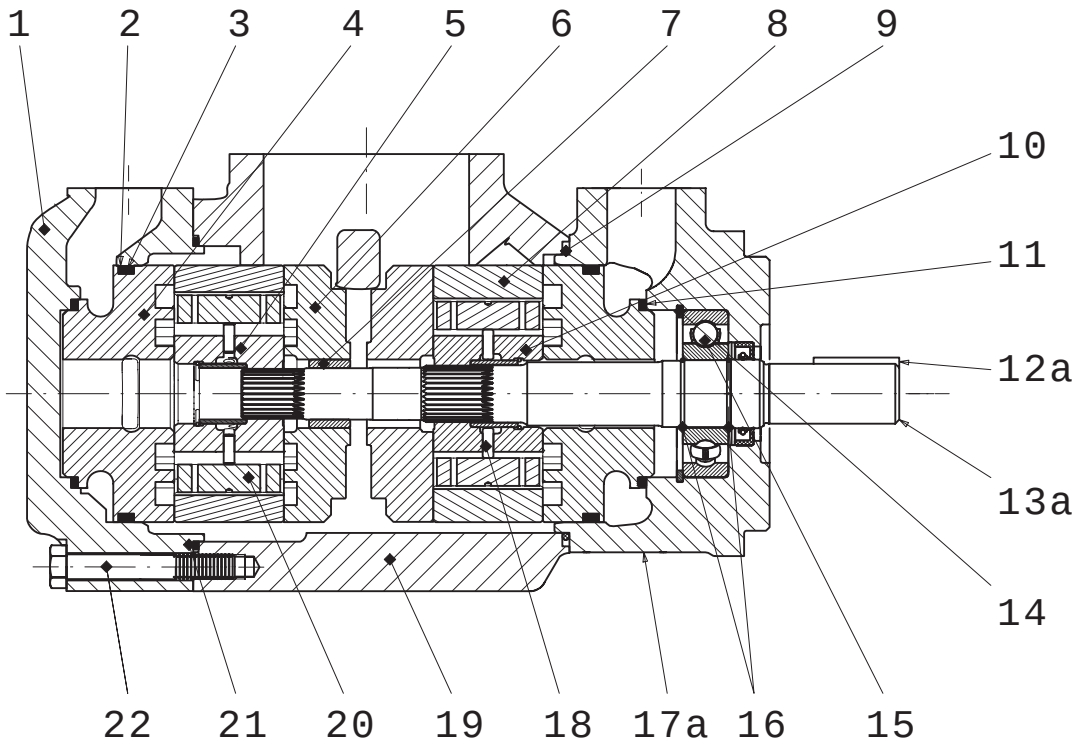

Hydraulic Pumps - Service Information
T6CC / T6CCM / T6CCP

Denison Vane - Flügelzellen - Palettes - Palette - Paletas

ENGINEERING YOUR SUCCESS.

T6CC Industrial

	Item - Pos. - Réf. - Pos.	
	22	27
Mounting torque	61 Nm 45 ft.lbs	159 Nm 117 ft.lbs
Anziehdrehmoment		
Couple de serrage		
Coppia di serragio		
Par de apriete		

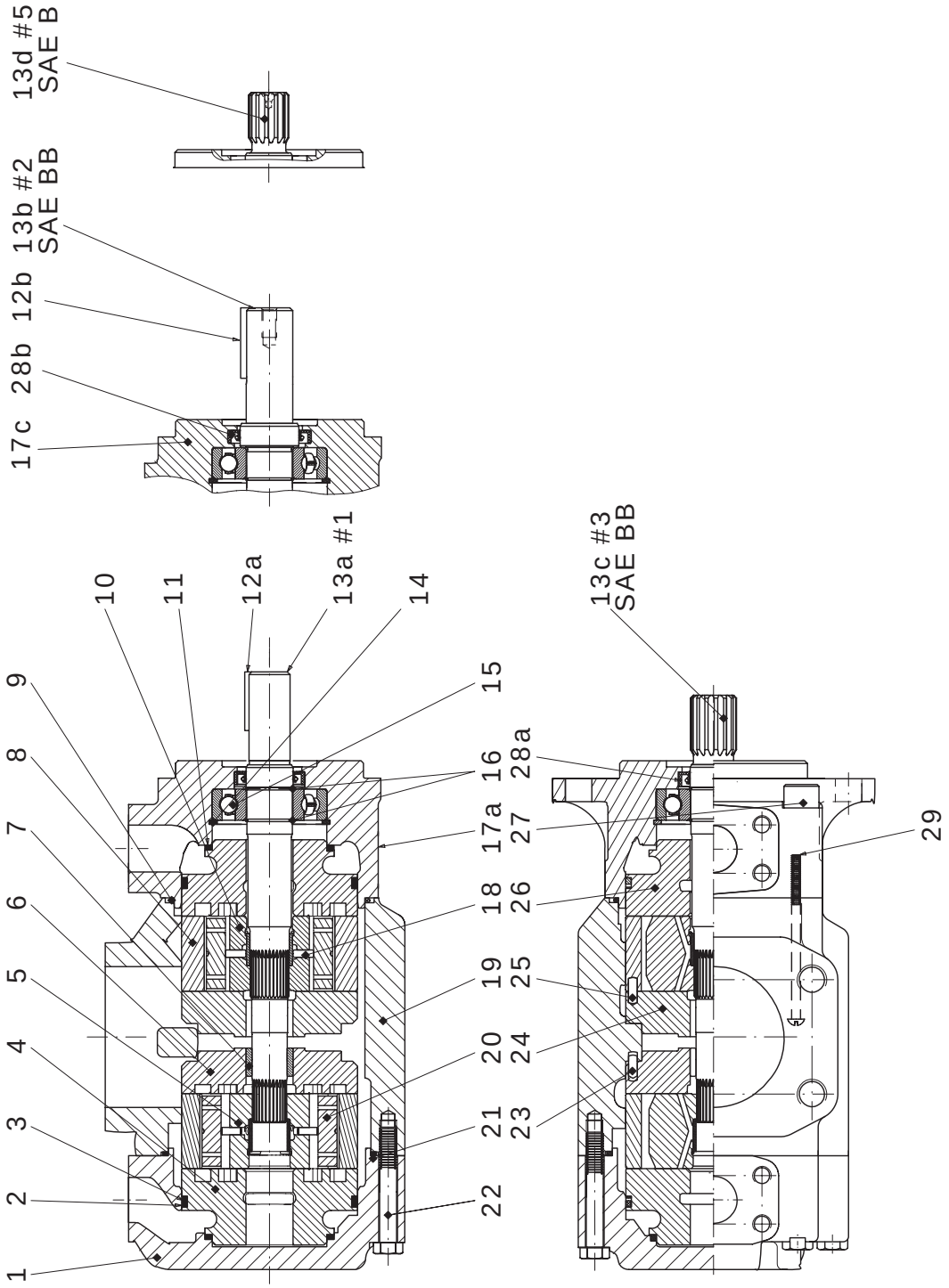

Recommended repair kits and assy's are bold printed
Empfohlene Austausch - Baugruppen sind fett gedruckt
Les pochettes de rechange recommandées sont imprimées en caractères gras
I kit di ricambio consigliati sono indicati in grassetto
Los juegos de reparacion recommendados y los conjuntos, estan en negrita

T6CCM Mobile

	Item - Pos. - Réf. - Pos.	
	22	27
Mounting torque Anziehdrehmoment Couple de serrage Coppia di serraggio Par de apriete	61 Nm 45 ft.lbs	159 Nm 117 ft.lbs

Recommended repair kits and assy's are bold printed
Empfohlene Austausch - Baugruppen sind fett gedruckt
Les pochettes de rechange recommandées sont imprimées en caractères gras
I kit di ricambio consigliati sono indicati in grassetto
Los juegos de reparacion recommendados y los conjuntos, estan en negrita

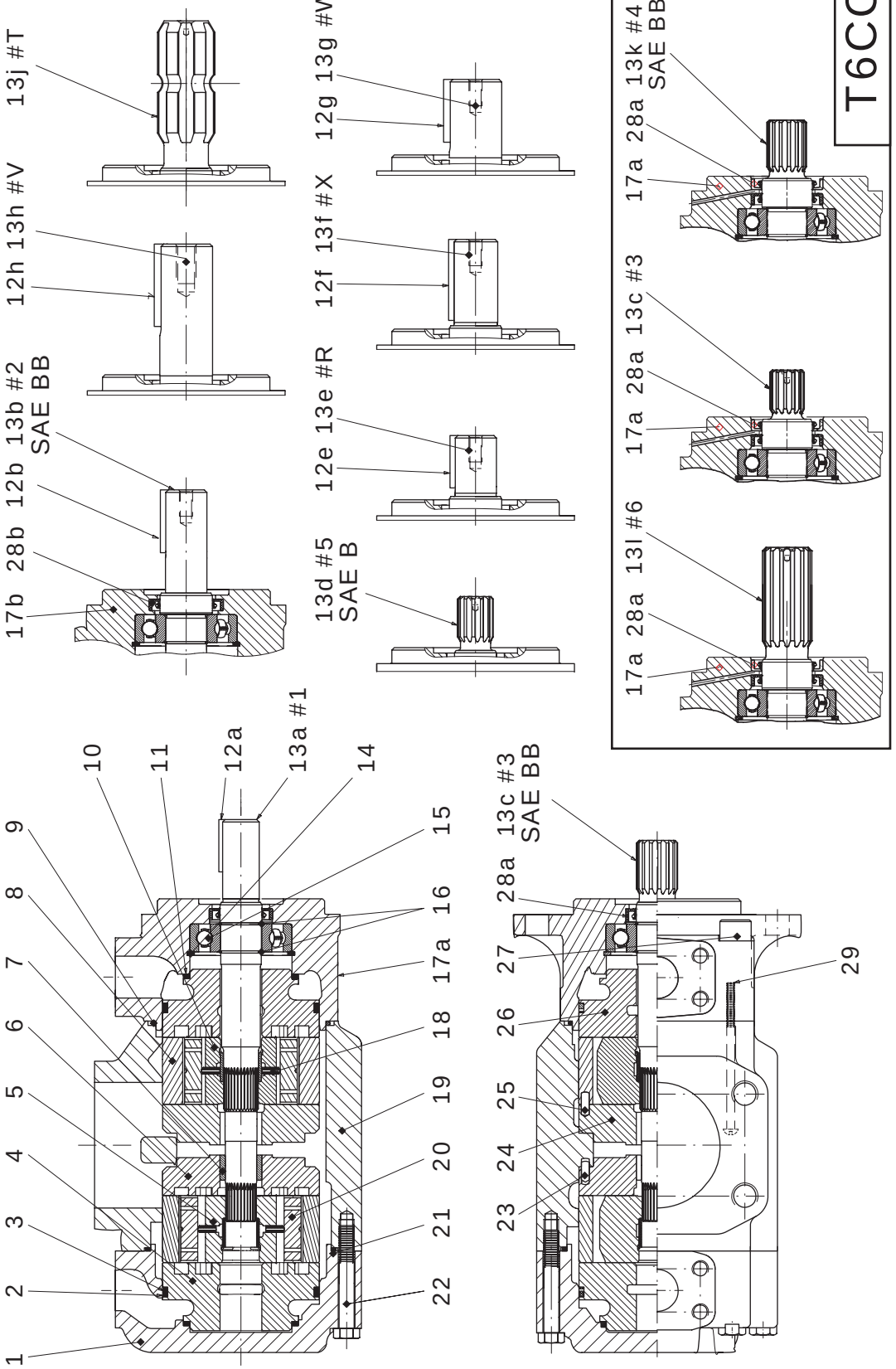

Parker Hannifin Manufacturing France SAS
VPDE, Denison Vane Pumps
Vierzon - France

Item Pos. Réf. Pos. Pos.	**Description** **Descrizione**	**Benennung** **Descripcion**	**Description**		Part N° Teil Nr. Code N° Cod. N° Referencia T6CC	Part N° Teil Nr. Code N° Cod. N° Referencia T6CCM-T6CCP	Qty. Stück Qté Q.tà Cant.
1	End cap (UNC) (P2 = 3/4") Coperchio (UNC) (P2 = 3/4")	Deckel (UNC) (P2 = 3/4") Tapa (UNC) (P2 = 3/4")	Chapeau (UNC) (P2 = 3/4")		034-59425-0	034-59425-0	1
	End cap (Metric) (P2 = 3/4") Coperchio (Metrica) (P2 = 3/4")	Deckel (Metrisch) (P2 = 3/4") Tapa (Metrico) (P2 = 3/4")	Chapeau (Métrique) (P2 = 3/4")		034-66508-0	034-66508-0	1
	End cap (UNC) (P2 = 1") Coperchio (UNC) (P2 = 1")	Deckel (UNC) (P2 = 1") Tapa (UNC) (P2 = 1")	Chapeau (UNC) (P2 = 1")		034-59423-0	034-59423-0	1
	End cap (Metric) (P2 = 1") Coperchio (Metrica) (P2 = 1")	Deckel (Metrisch) (P2 = 1") Tapa (Metrico) (P2 = 1")	Chapeau (Métrique) (P2 = 1")		034-66674-0	034-66674-0	1
2	Sq. section seal Guarnizione	Dichtring Junta seccion cuadrada	Joint section carrée	AB CD	691-10238-0	691-10238-0	2
3	Back-up ring Anello anti-estrusione	Stützring Anillo	Bague anti-extrusion	AB CD	618-00010-3	618.00010-3	2
4	Port plate-pressure Piatto distributore anter.	Steuerplatte Plato distribuidor-presión	Plaque pression	B	034-66453-0		1
5	Rotor-insert ass'y Insieme rotore	Rotor Conjunto rotor	Rotor et douille ass.	B	S24-10116-0	S24-30049-0	1
6	Port plate-rear Piatto distributore post.	Steuerplatte Plato distrbuidor trasero	Plaque arrière	RB	034-59118-0		1
7	Bush Bussola	Buchse Cojinete de fricción	Bague	BRS	034-59412-0	034-59412-0	1
8	Cam ring 003 Anello camma 003	Hubring 003 Aro volumetrico 003	Came 003	AB	034-59050-0	034-59050-0	2
	Cam ring 005 Anello camma 005	Hubring 005 Aro volumetrico 005	Came 005	AB	034-59051-0	034-59051-0	2
	Cam ring 006 Anello camma 006	Hubring 006 Aro volumetrico 006	Came 006	AB	034-59052-0	034-59052-0	2
	Cam ring 008 Anello camma 008	Hubring 008 Aro volumetrico 008	Came 008	AB	034-59053-0	034-59053-0	2
	Cam ring 010 Anello camma 010	Hubring 010 Aro volumetrico 010	Came 010	AB	034-59054-0	034-59054-0	2
	Cam ring 012 Anello camma 012	Hubring 012 Aro volumetrico 012	Came 012	AB	034-66595-0	034-66595-0	2
	Cam ring 014 Anello camma 014	Hubring 014 Aro volumetrico 014	Came 014	AB	034-59206-0	034-59206-0	2
	Cam ring 017 Anello camma 017	Hubring 017 Aro volumetrico 017	Came 017	AB	034-59207-0	034-59207-0	2
	Cam ring 020 Anello camma 020	Hubring 020 Aro volumetrico 020	Came 020	AB	034-66607-0	034-66607-0	2
	Cam ring 022 Anello camma 020	Hubring 022 Aro volumetrico 022	Came 022	AB	034-59208-0	034-59208-0	2
	Cam ring 025 Anello camma 025	Hubring 025 Aro volumetrico 025	Came 025	AB	034-59209-0	034-59209-0	2
	Cam ring 028 Anello camma 028	Hubring 028 Aro volumetrico 028	Came 028	AB	034-59245-0	034-59245-0	2

Item Pos. Réf. Pos. Pos.	**Description** **Descrizione**	**Benennung** **Descripcion**	**Description**		Part N° Teil Nr. Code N° Cod. N° Referencia T6CC*	Part N° Teil Nr. Code N° Cod. N° Referencia T6CCM-T6CCP	Qty Stück Qté Q.tà Cant.
8	Cam ring 031 Anello camma 031	Hubring 031 Aro volumetrico 031	Came 031	AB	034-66843-0	034-66843-0	2
9	O.ring Guarnizione	Dichtring Guarnizione torica	Joint torique	ACD	671-00244-0	671-00244-0	1
10	Rotor-insert ass'y Insieme rotore	Rotor Conjunto rotor	Rotor et douille ass.	A	S24-10350-0	S24-33974-0	1
11	Sq. section seal Guarnizione	Dichtring Junta seccion cuadrada	Joint section carrée	AB CD	691-10229-0	691-10229-0	2
12a	Key (code 1) Chiavetta (codice 1)	Paßfeder (Typ 1) Chaveta (codigo 1)	Clavette (code 1)	E	034-49622-0	034-49622-0	1
12b	Key (code 2) Chiavetta (codice 2)	Paßfeder (Typ 2) Chaveta (codigo 2)	Clavette (code 2)	F	034-48690-0	034-48690-0	1
12e	Key (code R) Chiavetta (codice R)	Paßfeder (Typ R) Chaveta (codigo R)	Clavette (code R)	J		034-66717-0	1
12f	Key (code X) Chiavetta (codice X)	Paßfeder (Typ X) Chaveta (codigo X)	Clavette (code X)	K		034-19579-0	1
12g	Key (code W) Chiavetta (codice W)	Paßfeder (Typ W) Chaveta (codigo W)	Clavette (code W)	L		034-49676-0	1
12h	Key (code V) Chiavetta (codice V)	Paßfeder (Typ V) Chaveta (codigo V)	Clavette (code V)	M		034-30168-0	1
13a	Shaft (keyed) (code 1) Albero a chiavetta (codice 1)	Paßfederwelle (Typ 1) Eje chaveteado (codigo 1)	Arbre à clavette (code 1)	E	034-59110-0	034-59110-0	1
13b	Shaft (keyed) (code 2) (SAE BB) (T6CCW) (T6CCMW) Albero a chiavetta (codice 2) (SAE BB) (T6CCW) (T6CCMW)	Paßfederwelle (Typ 2) (SAE BB) (T6CCW) (T6CCMW) Eje chaveteado (codigo 2) (SAE BB)(T6CCW) (T6CCMW)	Arbre à clavette (code 2) (SAE BB) (T6CCW) (T6CCMW)	F	034-66576-0	034-66576-0	1
13c	Shaft (splined) (code 3) (SAE BB) (T6CC) (T6CCM) Albero a scanalato (codice 3) (SAE BB) (T6CC) (T6CCM)	Vielkeilwelle (Typ 3) (SAE BB) (T6CC) (T6CCM) Eje estriado (codigo 3) (SAE BB) (T6CC) (T6CCM)	Arbre à cannelures (code 3) (SAE BB) (T6CC) (T6CCM)	G	034-59108-0	034-59108-0	1
	Shaft (splined) (code 3) (T6CCP) Albero a scanalato (codice 3) (T6CCP)	Vielkeilwelle (Typ 3) (T6CCP) Eje estriado (codigo 3) (T6CCP)	Arbre à cannelures (code 3) (T6CCP)	G		034-66727-0	1
13d	Shaft (splined) (code 5) (SAE B) (T6CC) (T6CCM) Albero a scanalato (codice 5) (SAE B) (T6CC) (T6CCM)	Vielkeilwelle (Typ 5) (SAE B) (T6CC) (T6CCM) Eje estriado (codigo 5) (SAE B)(T6CC) (T6CCM)	Arbre à cannelures (code 5) (SAE B) (T6CC) (T6CCM)	H	034-59109-0	034-59109-0	1
13e	Shaft (keyed) (code R) (T6CCMW) Albero a chiavetta (codice R) (T6CCMW)	Paßfederwelle (Typ R) (T6CCMW) Eje chaveteado (codigo R) (T6CCMW)	Arbre à clavette (code R) (T6CCMW)	J		034-66712-0	1
13f	Shaft (keyed) (code X) (T6CCMW) Albero a chiavetta (codice X) (T6CCMW)	Paßfederwelle (Typ X) (T6CCMW) Eje chaveteado (codigo X) (T6CCMW)	Arbre à clavette (code X) (T6CCMW)	K		034-66575-0	1
13g	Shaft (keyed) (code W) (T6CCMW) Albero a chiavetta (codice W) (T6CCMW)	Paßfederwelle (Typ W) (T6CCMW) Eje chaveteado (codigo W) (T6CCMW)	Arbre à clavette (code W) (T6CCMW)	L		034-66590-0	1
13h	Shaft (keyed) (code V) (T6CCMW) Albero a chiavetta (codice V) (T6CCMW)	Paßfederwelle (Typ V) (T6CCMW) Eje chaveteado (codigo V) (T6CCMW)	Arbre à clavette (code V) (T6CCMW)	M		034-66506-0	1
13j	Shaft (splined) (code T) (T6CCMW) Albero a scanalato (codice T) (T6CCMW)	Vielkeilwelle (Typ T)(T6CCMW) Eje estriado (codigo T) (T6CCMW)	Arbre à cannelures (code T) (T6CCMW)	N		034-66726-0	1
13k	Shaft (splined) (code 4) (SAE BB) (T6CCP) Albero a scanalato (codice 4) (SAE BB)(T6CCP)	Vielkeilwelle (Typ 4) (SAE BB) (T6CCP) Eje estriado (codigo 4) (SAE BB)(T6CCP)	Arbre à cannelures (code 4) (SAE BB) (T6CCP)	P		034-67001-0	1

Parker Hannifin Manufacturing France SAS
VPDE, Denison Vane Pumps
Vierzon - France

Item Pos. Réf. Pos. Pos.	Description Descrizione	Benennung Descripcion	Description		Part N° Teil Nr. Code N° Cod. N° Referencia T6CC	Part N° Teil Nr. Code N° Cod. N° Referencia T6CCM-T6CCP	Qty Stück Qté Q.tà Cant.
13l	Shaft (splined) (code 6) (T6CCP) Albero a scanalato (codice 6) (T6CCP)	Vielkeilwelle (Typ 6) (T6CCP) Eje estriado (codigo 6) (T6CCP)	Arbre à cannelures (code 6) (T6CCP)	Q		034-66728-0	1
14	Retaining ring Anello elastico	Sicherungsring Anillo de retención	Circlips		356-30244-0	356-30244-0	1
15	Ball bearing Cuscinetto a sfere	Kugellager Cojinete de bolas	Roulement à billes	E...Q	230-82054-0	230-82054-0	1
16	Round section ring (shafts 1-3-5) Anello elastico (albero 1-3-5)	Sicherungsring (Wellen 1-3-5) Anillo tórico (eje 1-3-5)	Anneau (arbres 1-3-5)	F J...N	034-70777-0	034-70777-0	2
	Round section ring (shafts 2-R-X-W-V-T) Anello elastico (albero 2-R-X-W-V-T)	Sicherungsring (Wellen 2-R-X-W-V-T) Anillo tórico (eje 2-R-X-W-V-T)	Anneau (arbres 2-R-X-W-V-T)		034-70777-0	034-70777-0	1
17a	Mounting cap (UNC) (shafts 1-3-5) Coperchio anteriore (UNC) (albero 1-3-5)	Deckel (UNC) (Wellen 1-3-5) Tapa de montage (UNC) (eje 1-3-5)	Chapeau de montage (UNC) (arbres 1-3-5)		034-59107-0	034-59107-0	1
	Mounting cap (Metric) (shafts 1-3-5) Coperchio anteriore (metrica) (albero 1-3-5)	Deckel (Metrisch) (Wellen 1-3-5) Tapa de montage (Metrica) (eje 1-3-5)	Chapeau de montage (Métrique) (arbres 1-3-5)		034-66690-0	034-66690-0	1
	Mounting cap (standard) (T6CCP) Coperchio anteriore (standard) (T6CCP)	Deckel (Standard) (T6CCP) Tapa de montage (estandar) (T6CCP)	Chapeau de montage (standard) (T6CCP)			034-66729-0	1
17b	Mounting cap (UNC) (shafts 2-R-X-W-V-T) Coperchio anteriore (UNC) (albero 2-R-X-W-V-T)	Deckel (UNC) (Wellen 2-R-X-W-V-T) Tapa de montage (UNC) (eje 2-R-X-W-V-T)	Chap. de mtg. (UNC) (arbres 2-R-X-W-V-T)		034-66579-0	034-66579-0	1
	Mounting cap (Metric) (shafts 2-R-X-W-V-T) Coperchio anteriore (metrica) (albero 2-R-X-W-V-)T	Deckel (Metrisch) (Wellen 2-R-X-W-V-T) Tapa de montage (Metrica) (eje 2-R-X-W-V-T)	Chap. de mtg. (Métrique) (arbres 2-R-X-W-V-T)		034-66507-0	034-66507-0	1
18	Pin-vane holdout Pistoncino di sostentamento	Stössel Espiga emouje paleta	Poussoir de palette	AB	034-59098-0	034-24982-0	20
19	Housing (UNC) (S = 2"1/2) Corpo (UNC) (S = 2"1/2)	Gehäuse (UNC) (S = 2"1/2) Cuerpo (UNC) (S = 2" 1/2)	Carter (UNC) (S = 2"1/2)		034-59125-0	034-59125-0	1
	Housing (Metric) (S = 2"1/2) Corpo (metrica) (S = 2"1/2)	Gehäuse (Metrisch) (S = 2"1/2) Cuerpo (Metrica) (S = 2" 1/2)	Carter (Métrique) (S = 2"1/2)		034-66509-0	034-66509-0	1
	Housing (UNC) (S = 3") Corpo (UNC) (S = 3")	Gehäuse (UNC) (S = 3") Cuerpo (UNC) (S = 3")	Carter (UNC) (S = 3")		034-59105-0	034-59105-0	1
	Housing (Metric) (S = 3") Corpo (UNC) (S = 3")	Gehäuse (Metrisch) (S = 3") Cuerpo (Metrica) (S = 3")	Carter (Métrique) (S = 3")		034-66675-0	034-66675-0	1
20	Vane Paletta	Flügel Paleta	Palette	AB	034-59099-0	034-66716-0	20
21	Sq. section seal Guarnizione	Dichtring Junta seccion cuadrada	Joint section carrée	BCD	671-10156-0	671-10156-0	1
22	Screw Vite	Schraube Tornille	Vis		306-40094-0	306-40094-0	7
23	Dowel pin Spina	Zentrierstift Pasador	Goupille	AB RS	323-82010-0	323-82010-0	2
24	Port plate-rear Piatto distributore post.	Steuerplatte Plato distribuidor trasero	Plaque arrière	AG	034-59118-0		1
25	Dowel pin Spina	Zentrierstift Pasador	Goupille	AB	324-21208-0	324-21208-0	4
26	Port plate-pressure Piatto distributore anter.	Steuerplatte Plato distribuidor-presión	Plaque pression	A	034-66453-0		1

Item Pos. Réf. Pos. Pos.	Description Descrizione	Benennung Descripcion	Description		Part N° Teil Nr. Code N° Cod. N° Referencia T6CC	Part N° Teil Nr. Code N° Cod. N° Referencia T6CCM-T6CCP	Qty Stück Qté Q.tà Cant.
27	Screw Vite	Schraube Tornille	Vis		358-20320-0	358-20320-0	4
28a	Shaft seal (S1 - 0,7 bar) (shafts 1-3-5) (T6CC - T6CCM) Paraolio (S1 - 0,7 bar) (albero 1-3-5) (T6CC - T6CCM)	Simmerring (S1 - 0,7 bar) (Wellen 1-3-5) (T6CC - T6CCM) Reten eje (S1 - 0,7 bar)(eje 1-3-5) (T6CC - T6CCM)	Joint d'arbre (S1 - 0,7 bar) (arbres 1-3-5) (T6CC - T6CCM)	C	620-82012-0	620-82012-0	1
	Shaft seal (S1 - 0,7 bar) (T6CCP) Paraolio (S1 - 0,7 bar) (T6CCP)	Simmerring (S1 - 0,7 bar) (T6CCP) Reten eje (S1 - 0,7 bar) (T6CCP)	Joint d'arbre (S1 - 0,7 bar) (T6CCP)	C		620-82046-0	2
	Shaft seal (S4 - S5 - 7 bar) (shafts 1-3-5) (T6CC - T6CCM) Paraolio (S4 - S5 - 7 bar) (albero 1-3-5) (T6CC - T6CCM)	Simmerring (S4 - S5 - 7 bar) (Wellen 1-3-5) (T6CC - T6CCM) Reten eje (S4 - S5 - 7 bar) (eje 1-3-5) (T6CC - T6CCM)	Joint d'arbre (S4 - S5 - 7 bar) (arbres 1-3-5) (T6CC - T6CCM)		620-82068-0	620-82068-0	1
28b	Shaft seal (S1 - 0,7 bar) (shafts 2-R-X-W-V-T) Paraolio (S1 - 0,7 bar) (albero 2-R-X-W-V-T)	Simmerring (S1 - 0,7 bar) (Wellen 2-R-X-W-V-T) Reten eje (S1 - 0,7 bar) (eje 2-R-X-W-V-T)	Joint d'arbre (S1 - 0,7 bar) (arb.res2-R-X-W-V-T)	D	620-82046-0	620-82046-0	1
	Shaft seal (S4 - 0,7 bar) (shafts 2-R-X-W-V-T) Paraolio (S1 - 0,7 bar) (albero 2-R-X-W-V-T)	Simmerring (S4 - 0,7 bar) (Wellen 2-R-X-W-V-T) Reten eje (S4 - 0,7 bar) (eje 2-R-X-W-V-T)	Joint d'arbre (S4 - 0,7 bar) (arbres 2-R-X-W-V-T)		620-82046-4	620-82046-4	1
	Shaft seal (S5 - 0,7 bar) (shafts 2-R-X-W-V-T) Paraolio (S5 - 0,7 bar) (albero 2-R-X-W-V-T)	Simmerring (S5 - 0,7 bar) (Wellen 2-R-X-W-V-T) Reten eje (S5 - 0,7 bar) (eje 2-R-X-W-V-T)	Joint d'arbre (S5 - 0,7 bar) (arbres 2-R-X-W-V-T)		620-82046-5	620-82046-5	1
29	Screw Vite	Schraube Tornille	Vis	AB	317-06266-0	317-06266-0	4
	REPAIR KIT KIT DI RICAMBIO	**AUSTAUSCH-BAUGRUPPEN CONJUNTO REPARACION**	**POCHETTES RECHANGES**				
A	**Cart. and plate ass'y B03 C.W. (P1) Ins. cart. B03 oraria (P1)**	**Pumpeneinheit B03 Rechtslauf (P1) Conjunto cart. y platos B03 giro d. (P1)**	**Cart. et plaque ass. B03 rot. d. (P1)**		**S24-58882-***	**S24-40150-***	**1**
A	**Cart. and plate ass'y B03 C.C.W. (P1) Ins. cart. B03 antioraria (P1)**	**Pumpeneinheit B03 Linkslauf (P1) Conjunto cart. y platos B03 giro i. (P1)**	**Cart. et plaque ass. B03 rot. g. (P1)**		**S24-58883-***	**S24-40151-***	**1**
A	**Cart. and plate ass'y B05 C.W. (P1) Ins. cart. B05 oraria (P1)**	**Pumpeneinheit B05 Rechtslauf (P1) Conjunto cart. y platos B05 giro d. (P1)**	**Cart. et plaque ass. B05 rot. d. (P1)**		**S24-58884-***	**S24-40152-***	**1**
A	**Cart. and plate ass'y B05 C.C.W. (P1) Ins. cart. B05 antioraria (P1)**	**Pumpeneinheit B05 Linkslauf (P1) Conjunto cart. y platos B05 giro i. (P1)**	**Cart. et plaque ass. B05 rot. g. (P1)**		**S24-58885-***	**S24-40153-***	**1**
A	**Cart. and plate ass'y B06 C.W. (P1) Ins. cart. B06 oraria (P1)**	**Pumpeneinheit B06 Rechtslauf (P1) Conjunto cart. y platos B06 giro d. (P1)**	**Cart. et plaque ass. B06 rot. d. (P1)**		**S24-58886-***	**S24-40154-***	**1**
A	**Cart. and plate ass'y B06 C.C.W. (P1) Ins. cart. B06 antioraria (P1)**	**Pumpeneinheit B06 Linkslauf (P1) Conjunto cart. y platos B06 giro i. (P1)**	**Cart. et plaque ass. B06 rot. g. (P1)**		**S24-58887-***	**S24-40155-***	**1**
A	**Cart. and plate ass'y B08 C.W. (P1) Ins. cart. B08 oraria (P1)**	**Pumpeneinheit B08 Rechtslauf (P1) Conjunto cart. y platos B08 giro d. (P1)**	**Cart. et plaque ass. B08 rot. d. (P1)**		**S24-58888-***	**S24-40156-***	**1**
A	**Cart. and plate ass'y B08 C.C.W. (P1) Ins. cart. B08 antioraria (P1)**	**Pumpeneinheit B08 Linkslauf (P1) Conjunto cart. y platos B08 giro i. (P1)**	**Cart. et plaque ass. B08 rot. g. (P1)**		**S24-58889-***	**S24-40157-***	**1**
A	**Cart. and plate ass'y B10 C.W. (P1) Ins. cart. B10 oraria (P1)**	**Pumpeneinheit B10 Rechtslauf (P1) Conjunto cart. y platos B10 giro d. (P1)**	**Cart. et plaque ass. B10 rot. d. (P1)**		**S24-58890-***	**S24-40158-***	**1**
A	**Cart. and plate ass'y B10 C.C.W. (P1) Ins. cart. B10 antioraria (P1)**	**Pumpeneinheit B10 Linkslauf (P1) Conjunto cart. y platos B10 giro i. (P1)**	**Cart. et plaque ass. B10 rot. g. (P1)**		**S24-58891-***	**S24-40159-***	**1**
A	**Cart. and plate ass'y B12 C.W. (P1) Ins. cart. B12 oraria (P1)**	**Pumpeneinheit B12 Rechtslauf (P1) Conjunto cart. y platos B12 giro d. (P1)**	**Cart. et plaque ass. B12 rot. d. (P1)**		**S24-58892-***	**S24-40160-***	**1**
A	**Cart. and plate ass'y B12 C.C.W. (P1) Ins. cart. B12 antioraria (P1)**	**Pumpeneinheit B12 Linkslauf (P1) Conjunto cart. y platos B12 giro i. (P1)**	**Cart. et plaque ass. B12 rot. g. (P1)**		**S24-58893-***	**S24-40161-***	**1**

Item Pos. Réf. Pos. Pos.	Description Descrizione	Benennung Descripcion	Description		Part N° Teil Nr. Code N° Cod. N° Referencia T6CC	Part N° Teil Nr. Code N° Cod. N° Referencia T6CCM-T6CCP	Qty Stück Qté Q.tà Cant.
A	Cart. and plate ass'y B14 C.W. (P1) Ins. cart. B14 oraria (P1)	Pumpeneinheit B14 Rechtslauf (P1) Conjunto cart. y platos B14 giro d. (P1)	Cart. et plaque ass. B14 rot d. (P1)		S24-58894-*	S24-40162-*	1
A	Cart. and plate ass'y B14 C.C.W. (P1) Ins. cart. B14 antioraria (P1)	Pumpeneinheit B14 Linkslauf (P1) Conjunto cart. y platos B14 giro i. (P1)	Cart. et plaque ass. B14 rot. g. (P1)		S24-58514-*	S24-40163-*	1
A	Cart. and plate ass'y B17 C.W. (P1) Ins. cart. B17 oraria (P1)	Pumpeneinheit B17 Rechtslauf (P1) Conjunto cart. y platos B17 giro d. (P1)	Cart. et plaque ass. B17 rot d. (P1)		S24-51569-*	S24-40164-*	1
A	Cart. and plate ass'y B17 C.C.W. (P1) Ins. cart. B17 antioraria (P1)	Pumpeneinheit B17 Linkslauf (P1) Conjunto cart. y platos B17 giro i. (P1)	Cart. et plaque ass. B17 rot g. (P1)		S24-51566-*	S24-40165-*	1
A	Cart. and plate ass'y B20 C.W. (P1) Ins. cart. B20 oraria (P1)	Pumpeneinheit B20 Rechtslauf (P1) Conjunto cart. y platos B20 giro d. (P1)	Cart. et plaque ass. B20 rot d. (P1)		S24-58898-*	S24-40166-*	1
A	Cart. and plate ass'y B20 C.C.W. (P1) Ins. cart. B20 antioraria (P1)	Pumpeneinheit B20 Linkslauf (P1) Conjunto cart. y platos B20 giro i. (P1)	Cart. et plaque ass. B20 rot. g. (P1)		S24-58899-*	S24-40167-*	1
A	Cart. and plate ass'y B22 C.W. (P1) Ins. cart. B22 oraria (P1)	Pumpeneinheit B22 Rechtslauf (P1) Conjunto cart. y platos B22 giro d. (P1)	Cart. et plaque ass. B22 rot d. (P1)		S24-58900-*	S24-40168-*	1
A	Cart. and plate ass'y B22 C.C.W. (P1) Ins. cart. B22 antioraria (P1)	Pumpeneinheit B22 Linkslauf (P1) Conjunto cart. y platos B22 giro i. (P1)	Cart. et plaque ass. B22 rot. g. (P1)		S24-58901-*	S24-40169-*	1
A	Cart. and plate ass'y B25 C.W. (P1) Ins. cart. B25 oraria (P1)	Pumpeneinheit B25 Rechtslauf (P1) Conjunto cart. y platos B25 giro d. (P1)	Cart. et plaque ass. B25 rot. d. (P1)		S24-58902-*	S24-40170-*	1
A	Cart. and plate ass'y B25 C.C.W. (P1) Ins. cart. B25 antioraria (P1)	Pumpeneinheit B25 Linkslauf (P1) Conjunto cart. y platos B25 giro i. (P1)	Cart. et plaque ass. B25 rot. g. (P1)		S24-58903-*	S24-40171-*	1
A	Cart. and plate ass'y B28 C.W. (P1) Ins. cart. B28 oraria (P1)	Pumpeneinheit B28 Rechtslauf (P1) Conjunto cart. y platos B28 giro d. (P1)	Cart. et plaque ass. B28 rot. d. (P1)		S24-58904-*	S24-40172-*	1
A	Cart. and plate ass'y B28 C.C.W. (P1) Ins. cart. B28 antioraria (P1)	Pumpeneinheit B28 Linkslauf (P1) Conjunto cart. y platos B28 giro i. (P1)	Cart. et plaque ass. B28 rot. g. (P1)		S24-58905-*	S24-40173-*	1
A	Cart. and plate ass'y B31 C.W. (P1) Ins. cart. B31 oraria (P1)	Pumpeneinheit B31 Rechtslauf (P1) Conjunto cart. y platos B31 giro d. (P1)	Cart. et plaque ass. B31 rot d. (P1)		S24-58906-*	S24-45793-*	1
A	Cart. and plate ass'y B31 C.C.W. (P1) Ins. cart. B31 antioraria (P1)	Pumpeneinheit B31 Linkslauf (P1) Conjunto cart. y platos B31 giro i. (P1)	Cart. et plaque ass. B31 rot. g. (P1)		S24-58907-*	S24-45794-*	1
B	Cart. and plate ass'y B03 C.W. (P2) Ins. cart. B03 oraria (P2)	Pumpeneinheit B03 Rechtslauf (P2) Conjunto cart. y platos B03 giro d. (P2)	Cart. et plaque ass. B03 rot. d. (P2)		S24-10371-*	S24-40200-*	1
B	Cart. and plate ass'y B03 C.C.W. (P2) Ins. cart. B03 antioraria (P2)	Pumpeneinheit B03 Linkslauf (P2) Conjunto cart. y platos B03 giro i. (P2)	Cart. et plaque ass. B03 rot. g. (P2)		S24-10372-*	S24-40201-*	1
B	Cart. and plate ass'y B05 C.W. (P2) Ins. cart. B05 oraria (P2)	Pumpeneinheit B05 Rechtslauf (P2) Conjunto cart. y platos B05 giro d. (P2)	Cart. et plaque ass. B05 rot d. (P2)		S24-10373-*	S24-40202-*	1
B	Cart. and plate ass'y B05 C.C.W. (P2) Ins. cart. B05 antioraria (P2)	Pumpeneinheit B05 Linkslauf (P2) Conjunto cart. y platos B05 giro i. (P2)	Cart. et plaque ass. B05 rot. g. (P2)		S24-10374-*	S24-40203-*	1
B	Cart. and plate ass'y B06 C.W. (P2) Ins. cart. B06 oraria (P2)	Pumpeneinheit B06 Rechtslauf (P2) Conjunto cart. y platos B06 giro d. (P2)	Cart. et plaque ass. B06 rot. d. (P2)		S24-10375-*	S24-40204-*	1
B	Cart. and plate ass'y B06 C.C.W. (P2) Ins. cart. B06 antioraria (P2)	Pumpeneinheit B06 Linkslauf (P2) Conjunto cart. y platos B06 giro i. (P2)	Cart. et plaque ass. B06 rot. g. (P2)		S24-10376-*	S24-40205-*	1
B	Cart. and plate ass'y B08 C.W. (P2) Ins. cart. B08 or aria (P2)	Pumpeneinheit B08 Rechtslauf (P2) Conjunto cart. y platos B08 giro d. (P2)	Cart. et plaque ass. B08 rot. d. (P2)		S24-10377-*	S24-40206-*	1
B	Cart. and plate ass'y B08 C.C.W. (P2) Ins. cart. B08 antioraria (P2)	Pumpeneinheit B08 Linkslauf (P2) Conjunto cart. y platos B08 giro i. (P2)	Cart. et plaque ass. B08 rot. g. (P2)		S24-10378-*	S24-40207-*	1

Item Pos. Réf. Pos. Pos.	Description Descrizione	Benennung Descripcion	Description		Part N° Teil Nr. Code N° Cod. N° Referencia T6CC	Part N° Teil Nr. Code N° Cod. N° Referencia T6CCM-T6CCP	Qty Stück Qté Q.tà Cant.
B	Cart. and plate ass'y B10 C.W. (P2) Ins. cart. B10 oraria (P2)	Pumpeneinheit B10 Rechtslauf (P2) Conjunto cart. y platos B10 giro d. (P2)	Cart. et plaque ass. B10 rot. d. (P2)		S24-10379-*	S24-40208-*	1
B	Cart. and plate ass'y B10 C.C.W. (P2) Ins. cart. B10 antioraria (P2)	Pumpeneinheit B10 Linkslauf (P2) Conjunto cart. y platos B10 giro i. (P2)	Cart. et plaque ass. B10 rot. g. (P2)		S24-10380-*	S24-40209-*	1
B	Cart. and plate ass'y B12 C.W. (P2) Ins. cart. B12 oraria (P2)	Pumpeneinheit B12 Rechtslauf (P2) Conjunto cart. y platos B12 giro d. (P2)	Cart. et plaque ass. B12 rot. d. (P2)		S24-26498-*	S24-40210-*	1
B	Cart. and plate ass'y B12 C.C.W. (P2) Ins. cart. B12 antioraria (P2)	Pumpeneinheit B12 Linkslauf (P2) Conjunto cart. y platos B12 giro i. (P2)	Cart. et plaque ass. B12 rot. g. (P2)		S24-26499-*	S24-40211-*	1
B	Cart. and plate ass'y B14 C.W. (P2) Ins. cart. B14 oraria (P2)	Pumpeneinheit B14 Rechtslauf (P2) Conjunto cart. y platos B14 giro d. (P2)	Cart. et plaque ass. B14 rot. d. (P2)		S24-10381-*	S24-40212-*	1
B	Cart. and plate ass'y B14 C.C.W. (P2) Ins. cart. B14 antioraria (P2)	Pumpeneinheit B14 Linkslauf (P2) Conjunto cart. y platos B14 giro i. (P2)	Cart. et plaque ass. B14 rot. g. (P2)		S24-10382-*	S24-40213-*	1
B	Cart. and plate ass'y B17 C.W. (P2) Ins. cart. B17 oraria (P2)	Pumpeneinheit B17 Rechtslauf (P2) Conjunto cart. y platos B17 giro d. (P2)	Cart. et plaque ass. B17 rot. d. (P2)		S24-10383-*	S24-40214-*	1
B	Cart. and plate ass'y B17 C.C.W. (P2) Ins. cart. B17 antioraria (P2)	Pumpeneinheit B17 Linkslauf (P2) Conjunto cart. y platos B17 giro i. (P2)	Cart. et plaque ass. B17 rot. g. (P2)		S24-10384-*	S24-40215-*	1
B	Cart. and plate ass'y B20 C.W. (P2) Ins. cart. B20 oraria (P2)	Pumpeneinheit B20 Rechtslauf (P2) Conjunto cart. y platos B20 giro d. (P2)	Cart. et plaque ass. B20 rot. d. (P2)		S24-40684-*	S24-40216-*	1
B	Cart. and plate ass'y B20 C.C.W. (P2) Ins. cart. B20 antioraria (P2)	Pumpeneinheit B20 Linkslauf (P2) Conjunto cart. y platos B20 giro i. (P2)	Cart. et plaque ass. B20 rot. g. (P2)		S24-49540-*	S24-40217-*	1
B	Cart. and plate ass'y B22 C.W. (P2) Ins. cart. B22 oraria (P2)	Pumpeneinheit B22 Rechtslauf (P2) Conjunto cart. y platos B22 giro d. (P2)	Cart. et plaque ass. B22 rot. d. (P2)		S24-10385-*	S24-40218-*	1
B	Cart. and plate ass'y B22 C.C.W. (P2) Ins. cart. B22 antioraria (P2)	Pumpeneinheit B22 Linkslauf (P2) Conjunto cart. y platos B22 giro i. (P2)	Cart. et plaque ass. B22 rot. g. (P2)		S24-10386-*	S24-40219-*	1
B	Cart. and plate ass'y B25 C.W. (P2) Ins. cart. B25 oraria (P2)	Pumpeneinheit B25 Rechtslauf (P2) Conjunto cart. y platos B25 giro d. (P2)	Cart. et plaque ass. B25 rot. d. (P2)		S24-10387-*	S24-40220-*	1
B	Cart. and plate ass'y B25 C.C.W. (P2) Ins. cart. B25 antioraria (P2)	Pumpeneinheit B25 Linkslauf (P2) Conjunto cart. y platos B25 giro i. (P2)	Cart. et plaque ass. B25 rot. g. (P2)		S24-10388-*	S24-40221-*	1
B	Cart. and plate ass'y B28 C.W.) (P2) Ins. cart. B28 oraria (P2)	Pumpeneinheit B28 Rechtslauf (P2) Conjunto cart. y platos B28 giro d. (P2)	Cart. et plaque ass. B28 rot. d. (P2)		S24-25973-*	S24-40222-*	1
B	Cart. and plate ass'y B28 C.C.W. (P2) Ins. cart. B28 antioraria (P2)	Pumpeneinheit B28 Linkslauf (P2) Conjunto cart. y platos B28 giro i. (P2)	Cart. et plaque ass. B28 rot. g. (P2)		S24-25974-*	S24-40223-*	1
B	Cart. and plate ass'y B31 C.W. (P2) Ins. cart. B31 oraria (P2)	Pumpeneinheit B31 Rechtslauf (P2) Conjunto cart. y platos B31 giro d. (P2)	Cart. et plaque ass. B31 rot. d. (P2)		S24-51341-*	S24-45775-*	1
B	Cart. and plate ass'y B31 C.C.W. (P2) Ins. cart. B31 antioraria (P2)	Pumpeneinheit B31 Linkslauf (P2) Conjunto cart. y platos B31 giro i. (P2)	Cart. et plaque ass. B31 rot. g. (P2)		S24-58367-*	S24-45776-*	1
	Seal kit (S1 - 0,7 bar) (shafts 1-3-5) (T6CC - CCM) Serie guarnizioni (S1 - 0,7 bar) (eje 1-3-5) (T6CC - T6CCM)	Dichtringsatz (S1 - 0,7 bar)(Wellen 1-3-5) (T6CC - T6CCM) Juego de juntas (S1 - 0,7 bar) (eje 1-3-5) (T6CC - T6CCM)	Pochette de joint (S1 - 0,7 bar)(arbres 1-3-5) (T6CC - T6CCM)		S24-10352-0	S24-10352-0	1
C	Seal kit (S1 - 0,7 bar) (T6CCP) Serie guarnizioni (S1 - 0,7 bar) (T6CCP)	Dichtringsatz (S1 - 0,7 bar) (T6CCP) Juego de juntas (S1 - 0,7 bar) (T6CCP)	Pochette de joint (S1 - 0,7 bar) (T6CCP)			S24-40230-0	1
	Seal kit (S4 - 7 bar) (shafts 1-3-5) Serie guarnizioni (S4 - 7 bar) (albero 1-3-5)	Dichtringsatz (S4 - 7 bar) (Wellen 1-3-5) Juego de juntas (S4 - 7 bar) (eje 1-3-5)	Pochette de joint (S4 - 7 bar) (arbres 1-3-5)		S24-10352-4	S24-10352-4	1

Item Pos. Réf. Pos. Pos.	Description Descrizione	Benennung Descripcion	Description	Part N° Teil Nr. Code N° Cod. Nº Referencia T6CC	Part N° Teil Nr. Code N° Cod. Nº Referencia T6CCM-T6CCP	Qty. Stück Qté Q.tà Cant.
C	Seal kit (S5 - 7 bar) (shafts 1-3-5) Serie guarnizioni (S5 - 7 bar) (albero 1-3-5)	Dichtringsatz (S5 - 7 bar) (Wellen 1-3-5) Juego de juntas (S5 - 7 bar) (eje 1-3-5)	Pochette de joint (S5 - 7 bar) (arbres 1-3-5)	S24-10352-5	S24-10352-5	1
D	Seal kit (S1 - 0,7 bar) (shafts 2-R-X-W-V-T) Serie guarnizioni (S5 - 0,7 bar) (albero 2- R-X-W-V-T)	Dichtringsatz (S1 - 0,7 bar) (Wellen 2-R-X-W-V-T) Juego de juntas (S1 - 0,7 bar) (eje 2-R-X-W-V-T)	Poch. de joint (S1 - 0,7 bar) (arbres 2-R-X-W-V-T)	S14-97724-0	S14-97724-0	1
D	Seal kit (S4 - 0,7 bar) (shafts 2-R-X-W-V-T) Serie guarnizioni (S4 - 0,7 bar) (albero 2-R-X-W-V-T)	Dichtringsatz (S4 - 0,7 bar) (Wellen 2-R-X-W-V-T) Juego de juntas (S4 - 0,7 bar) (eje 2-R-X-W-V-T)	Poch. de joint (S4 - 0,7 bar) (arbres 2-R-X-W-V-T)	S14-97724-4	S14-97724-4	1
D	Seal kit (S5 - 0,7 bar) (shafts 2-R-X-W-V-T) Serie guarnizioni (S5 - 0,7 bar) (albero 2-R-X-W-V-T)	Dichtringsatz (S5 - 0,7 bar) (Wellen 2-R-X-W-V-T) Juego de juntas (S5 - 0,7 bar) (eje 2-R-X-W-V-T)	Poch. de joint (S5 - 0,7 bar) (arbres 2-R-X-W-V-T)	S14-97724-5	S14-97724-5	1
E	Shaft and bearing ass'y (code 1) Ins. albero (codice 1)	Baugruppe (Welle u. Lager) (Typ 1) Conjunto eje cojinete (codigo 1)	Arbre et roulement ass. (code 1)	S24-10346-0	S24-10346-0	1
F	Shaft and bearing ass'y (code 2) Ins. albero (codice 2)	Baugruppe (Welle u. Lager) (Typ 2) Conjunto eje cojinete (codigo 2)	Arbre et roulement ass. (code 2)	S24-26208-0	S24-26208-0	1
G	Shaft and bearing ass'y (code 3) (T6CC - CCM) Ins. albero (codice 3) (T6CC - T6CCM)	Baugruppe (Welle u. Lager) (Typ 3) (T6CC - T6CCM) Conjunto eje cojinete (codigo 3) (T6CC - T6CCM)	Arbre et roulement ass. (code 3) (T6CC - T6CCM)	S24-10348-0	S24-10348-0	1
G	Shaft and bearing ass'y (code 3) (T6CCP) Ins. albero (codice 3) (T6CCP)	Baugruppe (Welle u. Lager) (Typ 3) (T6CCP) Conjunto eje cojinete (codigo 3) (T6CCP)	Arbre et roulement ass. (code 3) (T6CCP)		S24-40231-0	1
H	Shaft and bearing ass'y (code 5) Ins. albero (codice 5)	Baugruppe (Welle u. Lager) (Typ 5) Conjunto eje cojinete (codigo 5)	Arbre et roulement ass. (code 5)	S24-10347-0	S24-10347-0	1
J	Shaft and bearing ass'y (code R) Ins. albero (codice R)	Baugruppe (Welle u. Lager) (Typ R) Conjunto eje cojinete (codigo R)	Arbre et roulement ass. (code R)		S24-30001-0	1
K	Shaft and bearing ass'y (code X) Ins. albero (codice X)	Baugruppe (Welle u. Lager) (Typ X) Conjunto eje cojinete (codigo X)	Arbre et roulement ass. (code X)		S24-26211-0	1
L	Shaft and bearing ass'y (code W) Ins. albero (codice W)	Baugruppe (Welle u. Lager) (Typ W) Conjunto eje cojinete (codigo W)	Arbre et roulement ass. (code W)		S24-26376-0	1
M	Shaft and bearing ass'y (code V) Ins. albero (codice V)	Baugruppe (Welle u. Lager) (Typ V) Conjunto eje cojinete (codigo V)	Arbre et roulement ass. (code V)		S14-97723-0	1
N	Shaft and bearing ass'y (code T) Ins. albero (codice T)	Baugruppe (Welle u. Lager) (Typ T) Conjunto eje cojinete (codigo T)	Arbre et roulement ass. (code T)		S24-40034-0	1
P	Shaft and bearing ass'y (code 4) (T6CCP) Ins. albero (codice 4) (T6CCP)	Baugruppe (Welle u. Lager) (Typ 4) (T6CCP) Conjunto eje cojinete (codigo 4) (T6CCP)	Arbre et roulement ass. (code 4) (T6CCP)		S24-58341-0	1
Q	Shaft and bearing ass'y (code 6) (T6CCP) Ins. albero (codice 6) (T6CCP)	Baugruppe (Welle u. Lager) (Typ 6) (T6CCP) Conjunto eje cojinete (codigo 6) (T6CCP)	Arbre et roulement ass. (code 6) (T6CCP)		S24-40232-0	1
R	Port plate-rear and bush ass'y (P2) Ins. piatto distributore post. (P2)	Steuerplatte mit Buchse (P2) Coj. plato dist. trase. con coj. fricción (P2)	Plaque ar. et bague ass. (P2)	S24-10349-0		1
S	Port plate-rear ass'y (P1) Ins. piatto distributore post. (P1)	Steuerplatte (P1) Coj. plato dist. trasero (P1)	Plaque ar. ass. (P1)	S24-10418-0		1
	Seal class Tipo di guarnizioni	Dichtringsatz Clase de juntas	Classe de joint	S**-*****-* =		
				S1 BUNA N S**-*****-0		
				S4 EPDM S**-*****-4		
				S5 VITON® S**-*****-5		

Parker Hannifin Manufacturing France SAS
VPDE, Denison Vane Pumps
Vierzon - France

Model Code

Model number :

Series

Sever duty shaft

One letter can be added to specify special parts in series

Cam ring for P1 & P2
(Volumetric displacement) (ml/rev.)
B03 = 10,8
B05 = 17,2
B06 = 21,3
B08 = 26,4
B10 = 34,1

Type of shaft
1 = keyed (non SAE)
3 = splined (SAE BB)
5 = splined (SAE B)
Sever duty shaft (T6CCW only)
2 = keyed (SAE BB)

Direction of rotation
R = Clockwise
L = Counter-clockwise

Porting combination
00 = standard

Design letter

Seal class
1 = S1 - BUNA N
4 = S4 - EPDM
5 = S5 - VITON

Mounting w/connection variables
4 bolts SAE flange (J518c)

	P1 = 1"		S = 3"	
	UNC		Metric	
P2	1"	3/4"	1"	3/4"
Code	00	01	0M	WO

	P1 = 1"		S = 2"1/2	
	UNC		Metric	
P2	1"	3/4"	1"	3/4"
Code	10	11	1M	W1

Modifications

Typenschlüssel

Typenbezeichnung :

Baureihe

Hochleistungswelle

Optionen

Hubring P1 & P2
(Geometrisches Fördervolumen) (cm^3/U)
B12 = 37,1
B14 = 46,0
B17 = 58,3
B20 = 63,8

Art der Welle
1 = Paßfederwelle (nicht SAE)
3 = Vielkeilwelle (SAE BB)
5 = Vielkeilwelle (SAE B)
Hochleistungswelle (nur für T6CCW)
2 = Paßfederwelle (SAE BB)

Drehrichtung
R = Rechtslauf
L = Linkslauf

Lage der Anschlüsse
00 = standard

Ausführungsbuchstabe

Dichtungsklasse
1 = S1 - BUNA N
4 = S4 - EPDM
5 = S5 - VITON

Gehäuse-Anschlußgröbe
SAE Flansch (J518c)

	P1 = 1"		S = 3"	
	UNC		Metrisch	
P2	1"	3/4"	1"	3/4"
Typ	00	01	0M	WO

	P1 = 1"		S = 2"1/2	
	UNC		Metrisch	
P2	1"	3/4"	1"	3/4"
Typ	10	11	1M	W1

Modifikationen

Designation - type

Numéro du modèle : T6CC W . - B10 - B22 - 1 R 00 - C 1 - 00 - ..

Série

Arbre renforcé

Une lettre peut être ajoutée pour spécifier les pièces spéciales dans la série.

Came pour P1 & P2
(Cylindrée théorique) (cm^3/tr)
B22 = 70,3
B25 = 79,3
B28 = 88,8
B31 = 100,0

Type d'arbre
1 = à clavette (non SAE)
3 = à cannelures (SAE BB)
5 = à cannelures (SAE B)
Arbre renforcé (T6CCW seulement)
2 = à clavette (SAE BB)

Sens de rotation
R = à droite
L = à gauche

Combinaison des orifices
00 = standard

Conception

Classe de joint
1 = S1 - BUNA N
4 = S4 - EPDM
5 = S5 - VITON

Option sur orifices
Bride SAE 4 trous (J518c)

	P1 = 1"		S = 3"	
	UNC		Métrique	
P2	1"	3/4"	1"	3/4"
Code	00	01	0M	WO

	P1 = 1"		S = 2"1/2	
	UNC		Métrique	
P2	1"	3/4"	1"	3/4"
Code	10	11	1M	W1

Modifications

Parker Hannifin Manufacturing France SAS
VPDE, Denison Vane Pumps
Vierzon - France

Designazione

Sigla :

Serie

Albero per impiego gravoso

Una lettera può essere aggiunta per specificare parti speciali nella serie

Tipo di cartuccia P1 & P2
(Cylindrata) (ml/giro)
B03 = 10,8
B05 = 17,2
B06 = 21,3
B08 = 26,4
B10 = 34,1
B12 = 37,1
B14 = 46,0

Tipo di albero
1 = a chiavetta
3 = scanalato (SAE BB)
5 = scanalato (SAE B)
Albero per impiego gravoso (solo per T6CCW)
2 = a chiavetta (SAE BB)

Senso di rotazione
R = Orario
L = Antiorario

Orientamento delle bocche
00 = standard

Disegno

Tipo di guarnizioni
1 = S1 - BUNA N
4 = S4 - EPDM
5 = S5 - VITON

Dimensioni delle bocche

	P1 = 1"		S = 3"	
	UNC		Metrica	
P2	1"	3/4"	1"	3/4"
Codice	00	01	0M	WO

	P1 = 1"		S = 2"1/2	
	UNC		Metrica	
P2	1"	3/4"	1"	3/4"
Codice	10	11	1M	W1

Modifiche

Clave de designación

Referencia modelo :

T6CC W . - B10 - B22 - 1 R 00 - C 1 - 00 - ..

P1 P2

Serie

Eje trabajo duro

Una letra puede ser añadide pasa especificar piezas especiales en la serie

Aro volumetrico para P1 & P2
(Cilindrada) (ml/rev)
B17 = 58,3
B20 = 63,8
B22 = 70,3
B25 = 79,3
B28 = 88,8
B31 = 100,0

Tipo de eje
1 = chaveteado (no SAE)
3 = estriado (SAE BB)
5 = estriado (SAE B)
Eje trabajo duro (solo T6CCW)
2 = chaveteado (SAE BB)

Sentido de giro
R = Derecha
L = Izquierda

Posición de bocas
00 = estándar

Letra de diseño

Clase de juntas
1 = S1 - BUNA N
4 = S4 - EPDM
5 = S5 - VITON

Conexiones de montaje
Flange SAE 4 fori (J518c)

	P1 = 1"		S = 3"	
	UNC		Metrico	
P2	1"	3/4"	1"	3/4"
Codigo	00	01	0M	WO

	P1 = 1"		S = 2"1/2	
	UNC		Metrico	
P2	1"	3/4"	1"	3/4"
Codigo	10	11	1M	W1

Modificaciones

Parker Hannifin Manufacturing France SAS
VPDE, Denison Vane Pumps
Vierzon - France

Model Code — Typenschlüssel — Designation - type

Model number : — Typenbezeichnung : — Numéro du modèle :

T6CC* W . - B10 - B22 - 3 R 00 - D 1 - 00 - ..

Series M = Mobile 1 shaft seal
Serie P = Mobile 2 shaft seal

Serie M = Mobil, 1 Wellendichtung
Serie P = Mobil, 2 Wellendichtungen

Série M = Mobile 1 joint d'arbre
Série P = Mobile 2 joints d'arbre

Sever duty shaft

Hochleistungswelle

Arbre renforcé

P1 P2

One letter can be added to specify special parts in series

Optionen

Une lettre peut être ajoutée pour spécifier les pièces spéciales dans la série.

Cam ring for P1 & P2
(Volumetric displacement) (ml/rev.)
B03 = 10,8
B05 = 17,2
B06 = 21,3
B08 = 26,4
B10 = 34,1

Hubring P1 & P2
(Geometrisches Fördervolumen) (cm^3/U)
B12 = 37,1
B14 = 46,0
B17 = 58,3
B20 = 63,8

Came pour P1 & P2
(Cylindrée théorique) (cm^3/tr)
B22 = 70,3
B25 = 79,3
B28 = 88,8
B31 = 100,0

Type of shaft
M version
1 = keyed (non SAE)
3 = splined (SAE BB)
5 = splined (SAE B)
P version
3 = splined (no SAE
4 = splined (SAE BB)
6 = splined (no SAE)
Sever duty shaft (T6CCMW only)
2 = keyed (SAE BB)
R = keyed special
X = keyed special
W = keyed special
V = keyed special
T = splined (SAE J718c)

Art der Welle
Version M
1 = Paßfederwelle (nicht SAE)
3 = Vielkeilwelle (SAE BB)
5 = Vielkeilwelle (SAE B)
Version P
3 = Vielkeilwelle (nicht SAE)
4 = Vielkeilwelle (SAE BB)
6 = Vielkeilwelle (nicht SAE)
Hochleistungswelle (nur für T6CCMW)
2 = Paßfederwelle (SAE BB)
R = Spezialpaßfederwelle
X = Spezialpaßfederwelle
W = Spezialpaßfederwelle
V = Spezialpaßfederwelle
T = Vielkeilwelle (SAE J518c)

Type d'arbre
Version M
1 = à clavette (non SAE)
3 = à cannelures (SAE BB)
5 = à cannelures (SAE B)
Version P
3 = à cannelures (non SAE)
4 = à cannelures (SAE BB)
6 = à cannelures (non SAE)
Arbre renforcé (T6CCMW seulement)
2 = à clavette (SAE BB)
R = à clavette spécial
X = à clavette special
W = à clavette special
V = à clavette special
T = à cannelures (SAE J718c)

Direction of rotation
R = Clockwise
L = Counter-clockwise

Drehrichtung
R = Rechtslauf
L = Linkslauf

Sens de rotation
R = à droite
L = à gauche

Porting combination
00 = standard

Lage der Anschlüsse
00 = standard

Combinaison des orifices
00 = standard

Design letter

Ausführungsbuchstabe

Conception

Seal class
1 = S1 - BUNA N
4 = S4 - EPDM
5 = S5 - VITON

Dichtungsklasse
1 = S1 - BUNA N
4 = S4 - EPDM
5 = S5 - VITON

Classe de joint
1 = S1 - BUNA N
4 = S4 - EPDM
5 = S5 - VITON

Mounting w/connection variables
4 bolts SAE flange (J518c)

Gehäuse-Anschlußgröbe
SAE Flansch (J518c)

Option sur orifices
Bride SAE 4 trous (J518c)

	P1 = 1"		S = 3"	
	UNC		Metric	
P2	1"	3/4"	1"	3/4"
Code	00	01	0M	WO

	P1 = 1"		S = 2"1/2	
	UNC		Metric	
P2	1"	3/4"	1"	3/4"
Code	10	11	1M	W1

	P1 = 1"		S = 3"	
	UNC		Metrisch	
P2	1"	3/4"	1"	3/4"
Typ	00	01	0M	WO

	P1 = 1"		S = 2"1/2	
	UNC		Metrisch	
P2	1"	3/4"	1"	3/4"
Typ	10	11	1M	W1

	P1 = 1"		S = 3"	
	UNC		Métrique	
P2	1"	3/4"	1"	3/4"
Code	00	01	0M	WO

	P1 = 1"		S = 2"1/2	
	UNC		Métrique	
P2	1"	3/4"	1"	3/4"
Code	10	11	1M	W1

Modifications

Modifikationen

Modifications

Parker Hannifin Manufacturing France SAS
VPDE, Denison Vane Pumps
Vierzon - France

Designazione

Sigla :

Serie M = Mobile 1 guarnizione albero
Serie P = Mobile 2 guarnizioni albero

Albero per impiego gravoso

Una lettera può essere aggiunta per specificare parti speciali nella serie

Tipo di cartuccia P1 & P2
(Cylindrata) (ml/giro)
B03 = 10,8
B05 = 17,2
B06 = 21,3
B08 = 26,4
B10 = 34,1
B12 = 37,1
B14 = 46,0

Tipo di albero
Version M
1 = a chiavetta
3 = scanalato (SAE BB)
5 = scanalato (SAE B)
Version P
3 = a chiavetta
4 = a chiavetta (SAE BB)
6 = a chiavetta
Albero per impiego gravoso (solo per T6CCMW)
2 = a chiavetta (SAE BB)
R = a chiavetta
X = a chiavetta
W = a chiavetta
V = a chiavetta
T = scanalato (SAE J718c)

Senso di rotazione
R = Orario
L = Antiorario

Orientamento delle bocche
00 = standard

Disegno

Tipo di guarnizioni
1 = S1 - BUNA N
4 = S4 - EPDM
5 = S5 - VITON

Dimensioni delle bocche

	P1 = 1"		S = 3"	
	UNC		Metrica	
P2	1"	3/4"	1"	3/4"
Codice	00	01	0M	WO

	P1 = 1"		S = 2"1/2	
	UNC		Metrica	
P2	1"	3/4"	1"	3/4"
Codice	10	11	1M	W1

Modifiche

Clave de designación

Referencia modelo :

T6CC* W . - B10 - B22 - 3 R 00 - D 1 - 00 - ..

Serie M = Movil 1 reten eje
Serie P = movil 2 retenes eje

Eje trabajo duro

Una letra puede ser añadide pasa especificar piezas especiales en la serie

Aro volumetrico para P1 & P2
(Cilindrada) (ml/rev)
B17 = 58,3
B20 = 63,8
B22 = 70,3
B25 = 79,3
B28 = 88,8
B31 = 100,0

Tipo de eje
Version M
1 = chaveteado (no SAE)
3 = estriado (SAE BB)
5 = estriado (SAE B)
Version P
3 = estriado (no SAE)
4 = estriado (SAE BB)
6 = estriado (no SAE)
Eje trabajo duro (solo T6CCMW)
2 = chaveteado (SAE BB)
R = chaveteado especial
X = chaveteado especial
W = chaveteado especial
V = chaveteado especial
T = estriado (SAE J718c)

Sentido de giro
R = Derecha
L = Izquierda

Posición de bocas
00 = estándar

Letra de diseño

Clase de juntas
1 = S1 - BUNA N
4 = S4 - EPDM
5 = S5 - VITON

Conexiones de montaje
Flange SAE 4 fori (J518c)

	P1 = 1"		S = 3"	
	UNC		Metrico	
P2	1"	3/4"	1"	3/4"
Codigo	00	01	0M	WO

	P1 = 1"		S = 2"1/2	
	UNC		Metrico	
P2	1"	3/4"	1"	3/4"
Codigo	10	11	1M	W1

Modificaciones

Parker Hannifin Manufacturing France SAS
VPDE, Denison Vane Pumps
Vierzon - France

WARNING — USER RESPONSIBILITY

FAILURE OR IMPROPER SELECTION OR IMPROPER USE OF THE PRODUCTS DESCRIBED HEREIN OR RELATED ITEMS CAN CAUSE DEATH, PERSONAL INJURY AND PROPERTY DAMAGE.

- This document and other information from Parker-Hannifin Corporation, its subsidiaries and authorized distributors provide product or system options for further investigation by users having technical expertise.

- The user, through its own analysis and testing, is solely responsible for making the final selection of the system and components and assuring that all performance, endurance, maintenance, safety and warning requirements of the application are met. The user must analyze all aspects of the application, follow applicable industry standards, and follow the information concerning the product in the current product catalog and in any other materials provided from Parker or its subsidiaries or authorized distributors.

- To the extent that Parker or its subsidiaries or authorized distributors provide component or system options based upon data or specifications provided by the user, the user is responsible for determining that such data and specifications are suitable and sufficient for all applications and reasonably foreseeable uses of the components or systems.

Offer of Sale

Please contact your Parker representation for a detailed "Offer of Sale".

Parker Hannifin Manufacturing France SAS
VPDE, Denison Vane Pumps
Vierzon - France

Parker Worldwide

Europe, Middle East, Africa

AE – United Arab Emirates,
Dubai
Tel: +971 4 8127100
parker.me@parker.com

AT – Austria, Wiener Neustadt
Tel: +43 (0)2622 23501-0
parker.austria@parker.com

AT – Eastern Europe, Wiener Neustadt
Tel: +43 (0)2622 23501 900
parker.easteurope@parker.com

AZ – Azerbaijan, Baku
Tel: +994 50 22 33 458
parker.azerbaijan@parker.com

BE/LU – Belgium, Nivelles
Tel: +32 (0)67 280 900
parker.belgium@parker.com

BG – Bulgaria, Sofia
Tel: +359 2 980 1344
parker.bulgaria@parker.com

BY – Belarus, Minsk
Tel: +48 (0)22 573 24 00
parker.poland@parker.com

CH – Switzerland, Etoy
Tel: +41 (0)21 821 87 00
parker.switzerland@parker.com

CZ – Czech Republic, Klecany
Tel: +420 284 083 111
parker.czechrepublic@parker.com

DE – Germany, Kaarst
Tel: +49 (0)2131 4016 0
parker.germany@parker.com

DK – Denmark, Ballerup
Tel: +45 43 56 04 00
parker.denmark@parker.com

ES – Spain, Madrid
Tel: +34 902 330 001
parker.spain@parker.com

FI – Finland, Vantaa
Tel: +358 (0)20 753 2500
parker.finland@parker.com

FR – France, Contamine s/Arve
Tel: +33 (0)4 50 25 80 25
parker.france@parker.com

GR – Greece, Athens
Tel: +30 210 933 6450
parker.greece@parker.com

HU – Hungary, Budaoers
Tel: +36 23 885 470
parker.hungary@parker.com

IE – Ireland, Dublin
Tel: +353 (0)1 466 6370
parker.ireland@parker.com

IT – Italy, Corsico (MI)
Tel: +39 02 45 19 21
parker.italy@parker.com

KZ – Kazakhstan, Almaty
Tel: +7 7273 561 000
parker.easteurope@parker.com

NL – The Netherlands, Oldenzaal
Tel: +31 (0)541 585 000
parker.nl@parker.com

NO – Norway, Asker
Tel: +47 66 75 34 00
parker.norway@parker.com

PL – Poland, Warsaw
Tel: +48 (0)22 573 24 00
parker.poland@parker.com

PT – Portugal
Tel: +351 22 999 7360
parker.portugal@parker.com

RO – Romania, Bucharest
Tel: +40 21 252 1382
parker.romania@parker.com

RU – Russia, Moscow
Tel: +7 495 645-2156
parker.russia@parker.com

SE – Sweden, Spånga
Tel: +46 (0)8 59 79 50 00
parker.sweden@parker.com

SK – Slovakia, Banská Bystrica
Tel: +421 484 162 252
parker.slovakia@parker.com

SL – Slovenia, Novo Mesto
Tel: +386 7 337 6650
parker.slovenia@parker.com

TR – Turkey, Istanbul
Tel: +90 216 4997081
parker.turkey@parker.com

UA – Ukraine, Kiev
Tel: +48 (0)22 573 24 00
parker.poland@parker.com

UK – United Kingdom, Warwick
Tel: +44 (0)1926 317 878
parker.uk@parker.com

ZA – South Africa, Kempton Park
Tel: +27 (0)11 961 0700
parker.southafrica@parker.com

North America

CA – Canada, Milton, Ontario
Tel: +1 905 693 3000

US – USA, Cleveland (industrial)
Tel: +1 216 896 3000

US – USA, Elk Grove Village (mobile)
Tel: +1 847 258 6200

Asia Pacific

AU – Australia, Castle Hill
Tel: +61 (0)2-9634 7777

CN – China, Shanghai
Tel: +86 21 2899 5000

HK – Hong Kong
Tel: +852 2428 8008

ID – Indonesia, Tangerang
Tel: +62 21 7588 1906

IN – India, Mumbai
Tel: +91 22 6513 7081-85

JP – Japan, Fujisawa
Tel: +81 (0)4 6635 3050

KR – South Korea, Seoul
Tel: +82 2 559 0400

MY – Malaysia, Shah Alam
Tel: +60 3 7849 0800

NZ – New Zealand, Mt Wellington
Tel: +64 9 574 1744

SG – Singapore
Tel: +65 6887 6300

TH – Thailand, Bangkok
Tel: +662 186 7000

TW – Taiwan, New Taipei City
Tel: +886 2 2298 8987

VN – Vietnam, Ho Chi Minh City
Tel: +84 8 3999 1600

South America

AR – Argentina, Buenos Aires
Tel: +54 3327 44 4129

BR – Brazil, Cachoeirinha RS
Tel: +55 51 3470 9144

CL – Chile, Santiago
Tel: +56 2 623 1216

MX – Mexico, Toluca
Tel: +52 72 2275 4200

Ed. 2016-04-04

© 2017 Parker Hannifin Corporation. All rights reserved.

Catalogue HY29-0044-M1/EU, 04/2017

EMEA Product Information Centre
Free phone: 00 800 27 27 5374
(from AT, BE, CH, CZ, DE, DK, EE, ES, FI, FR, IE, IL, IS, IT, LU, MT, NL, NO, PL, PT, RU, SE, SK, UK, ZA)

US Product Information Centre
Toll-free number: 1-800-27 27 537

www.parker.com

Your local authorized Parker distributor