ENGINEERING TOMORROW

Technical Information

Series T90 Axial Piston Motors
Size 055/075/100



www.danfoss.com

Revision history

Table of revisions

Date	Changed	Rev
August 2021	Updated System pressure	0302
July 2021	Updated System pressure	0202
October 2020	4th edition - DITA layout, changed document number from BC00000366	0201
October 2017	3rd edition	0102
May 2016	2nd edition	0101
February 2016	1st edition	AA

Contents

General Description

Series T90 Family of Pumps and Motors 4
Fixed Displacement Motor, SAE Mount 5
Series T90 Pictorial Circuit Diagram 6
System Schematic 6

Technical Specifications

Overview 7
Features and Options 7
Specifications 7
Operating Parameters 8
Fluid Specification 8

Operating Parameters

Input Speed 9
  Independent Braking System 9
System Pressure 9
Case Pressure 10
Temperature 10
Viscosity 10

System Design Parameters

Fluid and Filtration 11
Independent Braking System 11
Reservoir 11
Overpressure Protection 12
Case Drain 12
Sizing Equations 12
  Formulas 12
External Shaft Loading and Bearing Life 12
  Applications with external shaft loads 13

Features and Options

Loop Flushing 15
Speed Sensor 16
Shaft Options 18

Installation Drawings

T90M55 Fixed Motor SAE Mount 19
T90M75 Fixed Motor SAE Mount 21
T90M100 Fixed Motor SAE Mount 23

General Description

Series T90 Family of Pumps and Motors

Series T90 hydrostatic pumps and motors can be applied together or combined with other products in a system to transfer and control hydraulic power. They are intended for closed circuit applications.

Series T90 variable displacement pumps are compact, high power density units. All models utilize the parallel axial piston/slipper concept in conjunction with a tiltable swashplate to vary the pump's displacement. Reversing the angle of the swashplate reverses the flow of oil from the pump and thus reverses the direction of rotation of the motor output.

Series T90 pumps include an integral charge pump to provide system replenishing and cooling oil flow, as well as control fluid flow. They also feature a range of auxiliary mounting pads to accept auxiliary hydraulic pumps for use in complementary hydraulic systems. A complete family of control options is available to suit a variety of control systems (mechanical, hydraulic, electric).

Series T90 motors also use the parallel axial piston/slipper design in conjunction with a fixed swashplate. They can intake/discharge fluid through either port; they are bidirectional. They also include an optional loop flushing feature that provides additional cooling and cleaning of fluid in the working loop.

- Series T90 – advanced technology today
- Three sizes of variable displacement pumps
- Three sizes of fixed displacement motors
- SAE mount configurations
- Efficient axial piston design
- Proven reliability and performance
- Compact, lightweight
- Worldwide sales and service

General Description

Fixed Displacement Motor, SAE Mount

Cross section

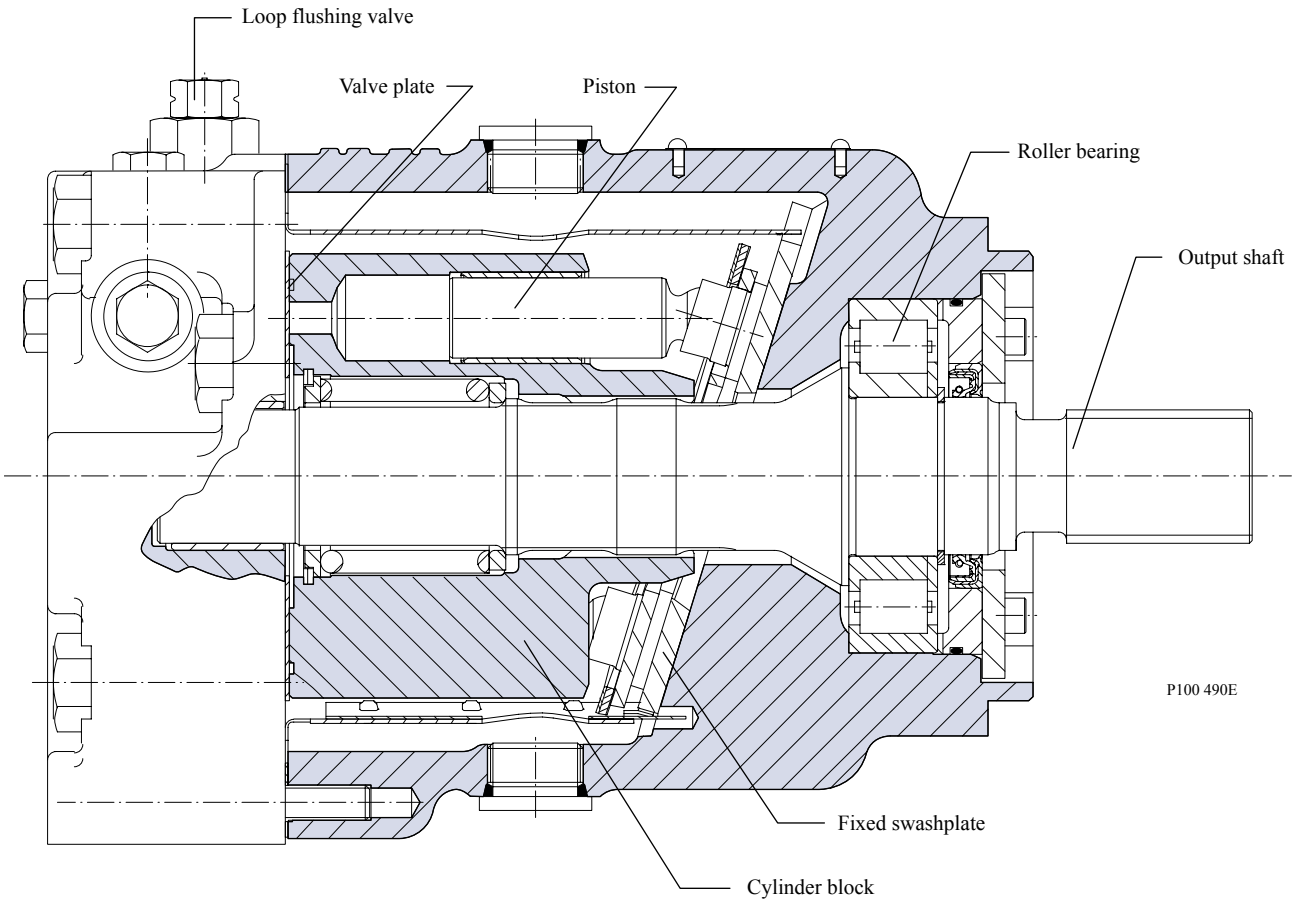

Name plate

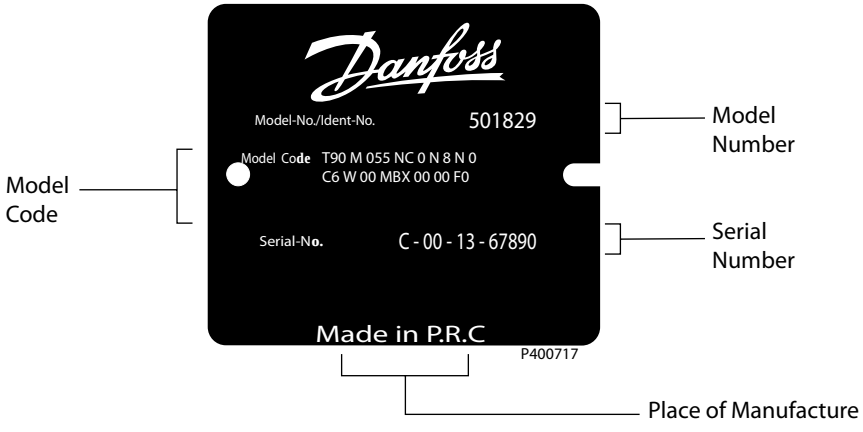

General Description

Series T90 Pictorial Circuit Diagram

The circuit diagram shows a hydrostatic transmission using a Series T90 axial piston variable displacement pump and a Series T90 fixed displacement motor.

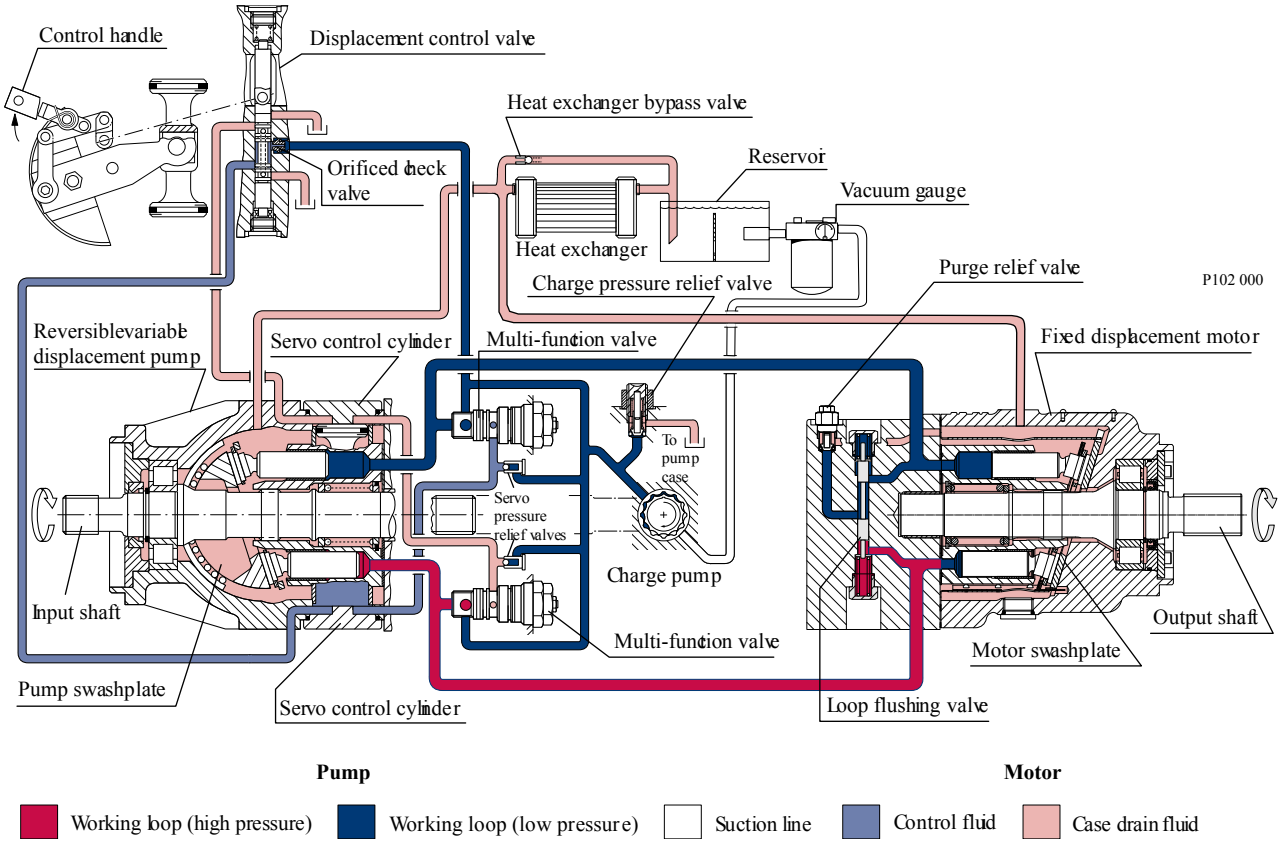

System Schematic

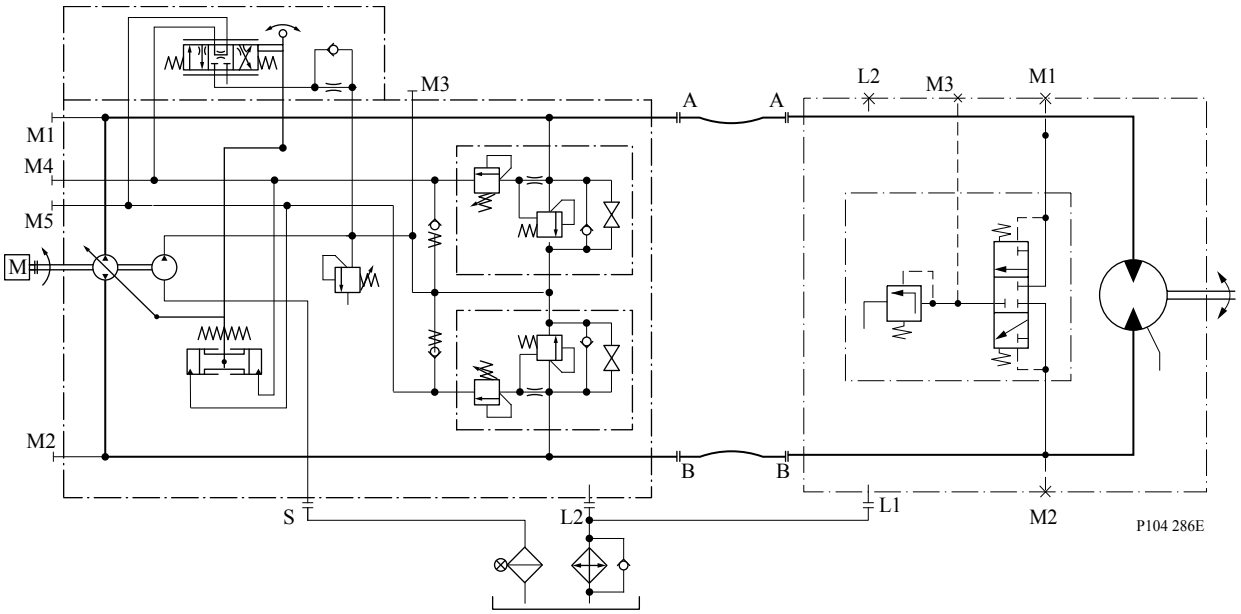

Technical Specifications

Overview

Specifications for the Series T90 motors are listed here for quick reference. For definitions and additional information, see **Operating Parameters** on page 8.

Features and Options

Motor type	In-line, axial piston, closed loop, positive displacement motors
Direction of rotation	Bi-directional, see outline drawings for rotation vs. flow direction information
Installation position	Discretionary: Housing must be filled with hydraulic fluid
Other system requirements	Independent braking system, overpressure protection, suitable reservoir, proper filtration

Parameter	055 MF	075 MF	100 MF
Types of mounting (SAE flange size per SAE J744)	SAE C	SAE C	SAE C
Port connections	Twin, axial	Twin, axial	Twin, axial
Output shaft options	Spline	Spline	Spline
Control options	—	—	—
Loop flushing	•	•	•
Speed sensor	o	o	o

• Standard

o Optional

— Not available / not applicable

Specifications

Parameter		055 MF	075 MF	100 MF
Swashplate		Fixed	Fixed	Fixed
Max. displacement cm^3/rev [in^3/rev]		55 [3.35]	75 [4.57]	100 [6.10]
Maximum corner power kW [hp]		142 [190]	175 235]	224 [300]
Theoretical torque N•m/bar [lbf•in/1000 psi]		0.88 [530]	1.19 [730]	1.59 [970]
Weight kg [lb]	SAE	22 [49]	26 [57]	34 [74]
Mass moment of inertia kg•m^2 [slug•ft^2]		0.0060 [0.0044]	0.0096 [0.0071]	0.0150 [0.0111]

Technical Specifications

Operating Parameters

Parameter	Unit	055 MF	075 MF	100 MF
Speed limits				
Continuous (max. disp.)	min^{-1}(rpm)	3500	3150	3000
Maximum (max. disp.)		3700	3350	3200
Continuous (min. disp.)		—	—	—
Maximum (min. disp.)		—	—	—
System pressure				
Maximum working pressure	bar [psi]	350 [5076]		
Maximum pressure		420 [6092]		
Flow ratings				
Rated (max. disp., rated speed)	l/min [US gal/min]	175 [46]	236 [62]	300 [79]
Maximum (max. disp., max. speed)		185 [49]	251 [66]	320 [85]
Case pressure				
Continuous	bar [psi]	3 [44]		
Maximum (cold start)		5 [73]		

Fluid Specification

Viscosity

Intermittent[1)]	5 [42]
Minimum	7 [49]
Recommended range	12 – 80 [66 – 370]
Maximum (cold start)	1600 [7500]

[1)] = Short term t < 1 min per incident and not exceeding 2 % of duty cycle based load-life.

Temperature

Minimum (cold start) [1)]	-40°C [-40°F]
Maximum continuous	104°C [220°F]
Recommended range[2)]	60 – 85°C [140 – 185°F]
Maximum Intermittent	115°C [240°F]

[1)] Cold start = Short term t > 3 min, p ≤ 50 bar [725 psi], n ≤ 1000 min-1 (rpm).

[2)] At the hottest point, normally case drain port.

Operating Parameters

Input Speed

Minimum speed is the lowest input speed recommended during engine idle condition. Operating below minimum speed limits the pump's ability to maintain adequate flow for lubrication and power transmission.

Rated speed is the highest input speed recommended at full power condition. Operating at or below this speed should yield satisfactory product life.

Operating conditions between rated and maximum speed should be restricted to less than full power and to limited periods of time.

Maximum speed is the highest operating speed permitted. Exceeding maximum speed reduces product life and can cause loss of hydrostatic power and braking capacity. For most drive systems, maximum unit speed occurs during downhill braking or negative power conditions.

Warning

Never exceed the maximum speed limit under any operating conditions.

During hydraulic braking and downhill conditions, the prime mover must be capable of providing sufficient braking torque in order to avoid pump over speed. This is especially important to consider for turbo-charged and Tier 4 engines.

For more information please see **Pressure and Speed Limits, BC152886484313**, when determining speed limits for a particular application.

Independent Braking System

Unintended vehicle or machine movement hazard. Exceeding maximum speed may cause a loss of hydrostatic drive line power and braking capacity.
Machine manufacturer is responsible to provide a braking system, redundant to the hydrostatic transmission, sufficient to stop and hold the vehicle or machine in the event of hydrostatic drive power loss. The braking system must also be sufficient to hold the machine in place when full power is applied.

System Pressure

Hydraulic unit life depends on the speed and normal operating — or weighted average — pressure that can only be determined from a duty cycle analysis.

System pressure is the differential pressure between high pressure system ports. It is the dominant operating variable affecting hydraulic unit life. High system pressure, which results from high load, reduces expected life.

Application pressure is the high pressure relief or pressure limiter setting normally defined within the order code of the pump. This is the applied system pressure at which the drive line generates the maximum calculated pull or torque in the application.

Maximum working pressure is the highest recommended application pressure and is not intended to be a continuous pressure. Propel systems with application pressures at, or below this pressure should yield satisfactory unit life given proper component sizing. Application pressures above maximum working pressure will only be considered with duty cycle analysis and factory approval.

Pressure spikes are normal and must be considered when reviewing maximum working pressure.

Operating Parameters

Maximum pressure	is the highest intermittent pressure allowed under any circumstances. Applications with applied pressures between rated and maximum require factory approval with complete application, duty cycle, and life expectancy analysis.
Minimum low loop pressure	must be maintained under all operating conditions to avoid cavitation.

All pressure limits are differential pressures referenced to low loop (charge) pressure. Subtract low loop pressure from gauge readings to compute the differential.

Case Pressure

Under normal operating conditions, the rated case pressure must not be exceeded. During cold start case pressure must be kept below maximum intermittent case pressure. Size drain plumbing accordingly.

The auxiliary pad cavity of axial pumps configured without integral charge pumps is referenced to case pressure. Units with integral charge pumps have auxiliary mounting pad cavities referenced to charge inlet (vacuum).

Possible component damage or leakage.
Operation with case pressure in excess of stated limits may damage seals, gaskets, and/or housings, causing external leakage. Performance may also be affected since charge and system pressure are additive to case pressure.

Temperature

The high temperature limits apply at the hottest point in the transmission, which is normally the motor case drain. The system should generally be run at or below the quoted **rated temperature**.

The **maximum intermittent temperature** is based on material properties and should never be exceeded.

Cold oil will generally not affect the durability of the transmission components, but it may affect the ability of oil to flow and transmit power; therefore temperatures should remain 16 °C [30 °F] above the pour point of the hydraulic fluid.

The **minimum temperature** relates to the physical properties of component materials.

Size heat exchangers to keep the fluid within these limits. Danfoss recommends testing to verify that these temperature limits are not exceeded.

Viscosity

For maximum efficiency and bearing life, ensure the fluid viscosity remains in the **recommended range**.

The **minimum viscosity** should be encountered only during brief occasions of maximum ambient temperature and severe duty cycle operation.

The **maximum viscosity** should be encountered only at cold start.

System Design Parameters

Fluid and Filtration

To prevent premature wear, it is imperative that only clean fluid enter the hydrostatic transmission circuit. A filter capable of controlling the fluid cleanliness to ISO 4406 class 22/18/13 (SAE J1165) or better under normal operating conditions is recommended.

The filter may be located either on the inlet (suction filtration) or discharge (charge pressure filtration) side of the charge pump. The selection of a filter depends on a number of factors including the contaminant ingression rate, the generation of contaminants in the system, the required fluid cleanliness, and the desired maintenance interval. Filters are selected to meet the above requirements using rating parameters of efficiency and capacity.

Filter efficiency may be measured with a Beta ratio (βX).

Filter βx-ratio is a measure of filter efficiency defined by ISO 4572. It is defined as the ratio of the number of particles greater than a given diameter ("x" in microns) upstream of the filter to the number of these particles downstream of the filter.

For simple suction-filtered closed circuit transmissions and open circuit transmissions with return line filtration, a filter with a β-ratio within the range of $\beta_{35\text{-}45} = 75$ ($\beta_{10} \geq 2$) or better has been found to be satisfactory. For some open circuit systems, and closed circuits with cylinders being supplied from the same reservoir, a considerably higher filter efficiency is recommended. This also applies to systems with gears or clutches using a common reservoir. For these systems, a charge pressure or return filtration system with a filter β-ratio in the range of $\beta_{15\text{-}20} = 75$ ($\beta_{10} \geq 10$) or better is typically required.

Because each system is unique, only a thorough testing and evaluation program can fully validate the filtration system. Please see **Design Guidelines for Hydraulic Fluid Cleanliness BC152886482150**, for more information.

Independent Braking System

Warning

Unintended vehicle or machine movement hazard.

The loss of hydrostatic drive line power, in any mode of operation (forward, neutral, or reverse) may cause the system to lose hydrostatic braking capacity. You must provide a braking system, redundant to the hydrostatic transmission, sufficient to stop and hold the vehicle or machine in the event of hydrostatic drive power loss.

Reservoir

The reservoir should be designed to accommodate maximum volume changes during all system operating modes and to promote de-aeration of the fluid as it passes through the tank.

A suggested minimum total reservoir volume is 5/8 of the maximum charge pump flow per minute with a minimum fluid volume equal to 1/2 of the maximum charge pump flow per minute. This allows 30 seconds fluid dwell for removing entrained air at the maximum return flow. This is usually adequate to allow for a closed reservoir (no breather) in most applications.

The reservoir outlet to the charge pump inlet should be above the bottom of the reservoir to take advantage of gravity separation and prevent large foreign particles from entering the charge inlet line. A 125 mm screen over the outlet port is recommended.

The reservoir inlet (fluid return) should be positioned so that flow to the reservoir is discharged below the normal fluid level, and also directed into the interior of the reservoir for maximum dwell and efficient de-aeration. A baffle (or baffles) between the reservoir inlet and outlet ports will promote de-aeration and reduce surging of the fluid.

System Design Parameters

Overpressure Protection

Series T90 motors (as well as other system components) have pressure limitations. As Series 90 motors are not equipped with overpressure protection, it is necessary that relief valves or pressure limiters are present elsewhere in the high pressure circuit to protect components from excessive pressures.

Series T90 pumps are designed with a sequenced pressure limiting system and high pressure relief valves. When the preset pressure is reached, the pressure limiter system acts to rapidly de-stroke the pump in order to limit the system pressure. For unusually rapid load application, the high pressure relief valve function is available to also limit the pressure level. Refer to publication **Series T90 Pumps Technical Information Manual BC152886484177** for more information.

For systems with relief valves only, high pressure relief valves are intended for transient overpressure protection and are not intended for continuous pressure control. Operation over relief valves for extended periods of time may result in severe heat build up. High flows over relief valves may result in pressure levels exceeding the nominal valve setting and potential damage to system components.

Case Drain

A case drain line must be connected to one of the case outlets (L1 or L2) to return internal leakage and loop flushing flow to the system reservoir. The higher of the two case outlets should be used to promote complete filling of the case. Since case drain fluid is typically the hottest fluid in the system, it is advantageous to return this flow through the heat exchanger.

Sizing Equations

The following equations are helpful when sizing hydraulic motors. Generally, the sizing process is initiated by an evaluation of the machine system to determine the required motor speed and torque to perform the necessary work function. Refer to **Selection of drive line components BLN-9985**, for a more complete description of hydrostatic drive line sizing. First, the motor is sized to transmit the maximum required torque. The pump is then selected as a flow source to achieve the maximum motor speed.

Formulas

Based on SI units		Based on US units	
Input flow $Q = \frac{V_g \cdot n}{1000 \cdot \eta_v}$	(l/min)	Input flow $Q = \frac{V_g \cdot n}{231 \cdot \eta_v}$	(US gal/min)
Output torque $M = \frac{V_g \cdot \Delta p \cdot \eta_m}{20 \cdot \pi}$	(N•m)	Output torque $M = \frac{V_g \cdot \Delta p \cdot \eta_m}{2 \cdot \pi}$	(lbf•in)
Output power $P = \frac{Q \cdot \Delta p \cdot \eta_t}{600}$	(kW)	Output power $P = \frac{Q \cdot \Delta p \cdot \eta_t}{1714}$	(hp)
Motor speed $n = \frac{Q \cdot 1000 \cdot \eta_v}{V_g}$	(min^{-1}(rpm))	Motor speed $n = \frac{Q \cdot 231 \cdot \eta_v}{V_g}$	(min^{-1}(rpm))

Variables		SI units [US units]	
V_g	=	Displacement per revolution	cm^3/rev [in^3/rev]
p_o	=	Outlet pressure	bar [psi]
p_i	=	Inlet pressure	bar [psi]
Δp	=	$p_o - p_i$ (system pressure)	bar [psi]
n	=	Speed	min^{-1} (rpm)
η_v	=	Volumetric eff ciency	
η_m	=	Mechanical eff ciency	
η_t	=	Overall eff ciency ($\eta_v \cdot \eta_m$)	

External Shaft Loading and Bearing Life

In vehicle propel drives with no external shaft loads where the system pressure is changing direction and magnitude regularly and the operating parameters are within the limits, the normal L20 bearing life (80% survival) will exceed the hydraulic life of the unit.

System Design Parameters

In non-propel drives such as vibratory drives, conveyor drives or fan drives, the operating pressure is often constant. These drives have unique duty cycles compared to a propel drive. In these types of applications a bearing life review is recommended.

In a bearing life analysis the following parameters are considered: Speed, pressure and external loads. Other factors that affect life include fluid type, viscosity and cleanliness.

Shaft loading parameters

Re	Maximum radial side load
Me	Maximum external moment
L	Distance from mounting flange to point of load

Shaft loading

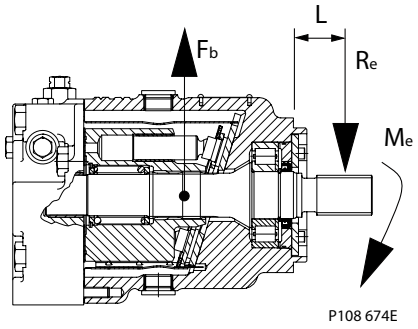

External shaft load orientation

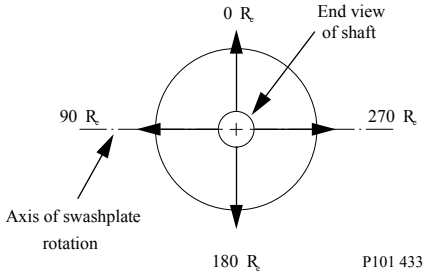

Applications with external shaft loads

Avoid external thrust (axial) loads in either direction whenever possible. Thrust loads could reduce the bearing life in applications with low delta system pressure or when present in combination with radial loading or bending moments.

External loads are found in applications where the motor is driven with a radial load on the shaft (i.e. belt or gear driven) as well as installations with misalignment or improper concentricity between the motor and drive coupling. All external loads will act to reduce the normal bearing life of a motor.

In applications where external radial shaft loads cannot be avoided, minimize the impact on bearing life by orienting the load to the 180° position as shown in the figure below when possible. Use tapered output shafts or clamped-type couplings where radial shaft loads are present.

Maximum allowable external shaft loads

Displacement	cm3	055	075	100
External moment Me	N•m	101	118	126

* No tapered shaft available

System Design Parameters

If continuous applied radial loads exceed 25% of the maximum allowable or thrust (axial) loads are present, contact your Danfoss representative for a bearing life evaluation.

Features and Options

Loop Flushing

W Warning

Unintended vehicle or machine movement hazard.

Excessive motor loop flushing flow may result in the inability to build required system pressure in some conditions. Maintain correct charge pressure under all conditions of operation to maintain pump control performance in hydrostatic systems.

An integral non-adjustable loop flushing valve is incorporated into Series 90 motors. Installations that require fluid to be removed from the low pressure side of the system circuit because of cooling requirements or contamination removal will benefit from loop flushing.

The integral loop flushing valve is equipped with an orificed charge pressure relief valve designed with a cracking pressure of 16 bar [232 psi]. Valves are available with several orifice sizes to meet the flushing flow requirements of all system operating conditions.

The total system charge pump flow should be of sufficient volume to accommodate:

- The number of motors in the system
- System efficiency under worst case conditions
- Pump control requirements
- External needs

Although charge pump sizing requires the consideration of many system variables, the following table gives a recommendation of what charge pump displacement may be required to accommodate the flushing flow of each available charge relief valve orifice.

Equation $Q_{Flush} = \frac{Q_{Charge} - Q_{Leak}}{2 \cdot k_{Mo}}$

Where

Q_{Flush} = flushing flow per motor

Q_{Charge} = charge flow at operating speed

k_{Mo} = number of motors fed by one pump

Q_{Leak} = sum of external leakages including the following:

- motor leakage
- pump leakage + internal consumers: 8 l/min [2.11 US gal/min] for displacement control pumps

or for non-feedback controlled pumps at 200 bar [2900 psi]

- external consumers (brakes, cylinders, other pumps)

Features and Options

Loop flushing flow curves

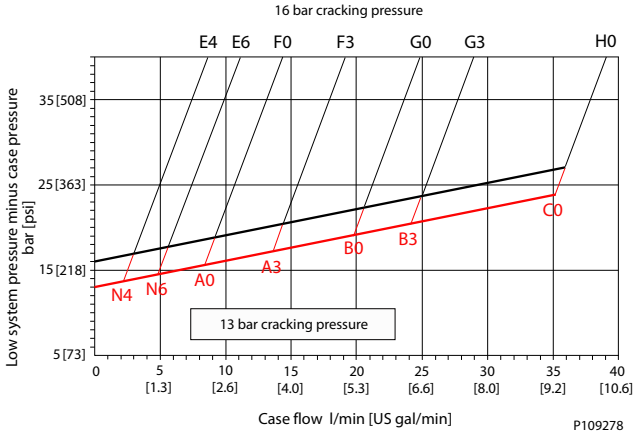

Recommended charge pump displacement

Orifice option		Charge pump displacement
13 bar ± 8.5% cracking pressure	16 bar ± 8.5% cracking pressure	
N4	E4	8 cm³ [0.49 in³]
N6	E6	8 cm³ [0.49 in³]
A0	F0	11 cm³ [0.67 in³]
A3	F3	14 cm³ [0.85 in³]
B0	G0	17 or 20 cm³ [1.04 or 1.22 in³]
B3	G3	26 cm³ [1.59 in³]
C0	H0	34, 37, or 65 cm³ [2.07, 2.26, or 3.97 in³]

Schematic diagram of loop flushing valve

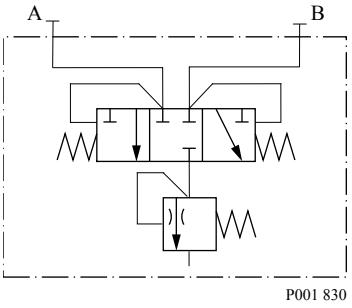

Loop flushing valve cross section

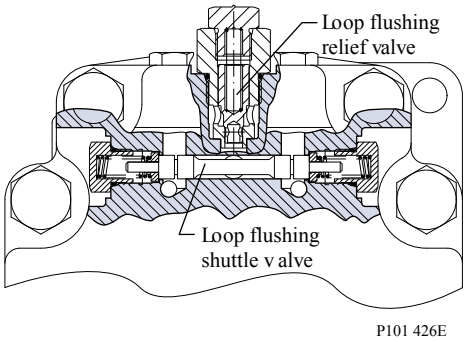

Speed Sensor

An optional speed sensor for direct measurement of speed is available. This sensor may also be used to sense the direction of rotation.

A special magnetic ring is pressed onto the outside diameter of the cylinder block and a Hall effect sensor is located in the motor housing. The sensor accepts supply voltage and outputs a digital pulse signal in response to the speed of the ring. The output changes its high/low state as the north and south poles of the permanently magnetized speed ring pass by the face of the sensor. The digital signal is generated at frequencies suitable for microprocessor based controls.The sensor is available with different connectors (see below).

Features and Options

Speed Sensor

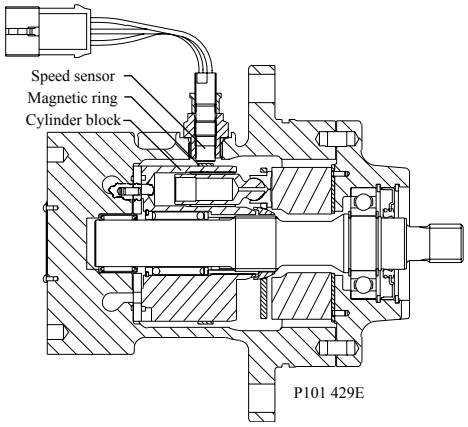

Specifications

Supply voltage*	4.5 to 8.5 VDC
Supply voltage (regulated)	15 VDC max.
Required current	12 mA at 5 VDC, 1 Hz
Max. current	20 mA at 5 VDC, 1 Hz
Max. frequency	15 kHz
Voltage output (high)	Supply -0.5 V min.
Voltage output (low)	0.5 V max.
Temperature range	-40° to 110°C [-40° to 230°F]

* Do not energize the 4.5 to 8.5 VDC sensor with 12 VDC battery voltage. Use a regulated power supply. If you need to energize the sensor with battery voltage, contact your Danfoss representative for a special sensor.

Pulse frequency

	055	075	100
Pulse per revolution	52	58	63

Speed sensor with Turck® Eurofast connector

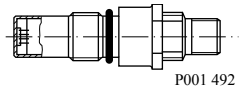

Speed sensor with Packard® Weather-Pack connector

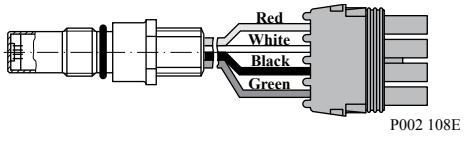

Features and Options

Shaft Options

Series T90 motors are available with a variety of splined, straight keyed, and tapered shaft ends. Nominal shaft sizes and torque ratings are shown in the accompanying table.

Torque ratings assume no external radial loading. Continuous torque ratings for splined shafts are based on spline tooth wear, and assume the mating spline has a minimum hardness of Rc 55 and full spline depth with initial lubrication. Maximum torque ratings are based on fatigue and assume 200 000 load reversals. The permissible continuous torque may approach the maximum rating if the spline is immersed in circulating oil.

Series 90 shaft options

Shaft description	Option code	Torque rating			Frame size availability		
			N•m	in•lbf	055	075	100
21 tooth, 16/32 pitch spline	C6	Maximum: Continuous:	1130 384	10 000 3400	•	•	•
23 tooth, 16/32 pitch spline	C7	Maximum: Continuous:	1580 509	14 000 4500	—	•	•
13 tooth, 8/16 pitch spline	F1	Maximum: Continuous:	1810 746	16 000 6600	—	—	•
14 tooth, 12/24 pitch spline	S1	Maximum: Continuous:	735 283	6500 2500	•	•	•

• Available

— Not available

Recommended mating splines for Series T90 splined output shafts should be in accordance with ANSI B92.1 Class 5. Danfoss external splines are modified class 5 fillet root side fit. The external spline major diameter and circular tooth thickness dimensions are reduced to assure a clearance fit with the mating spline. Contact your Danfoss representative for other splined shaft options.

Installation Drawings

T90M55 Fixed Motor SAE Mount

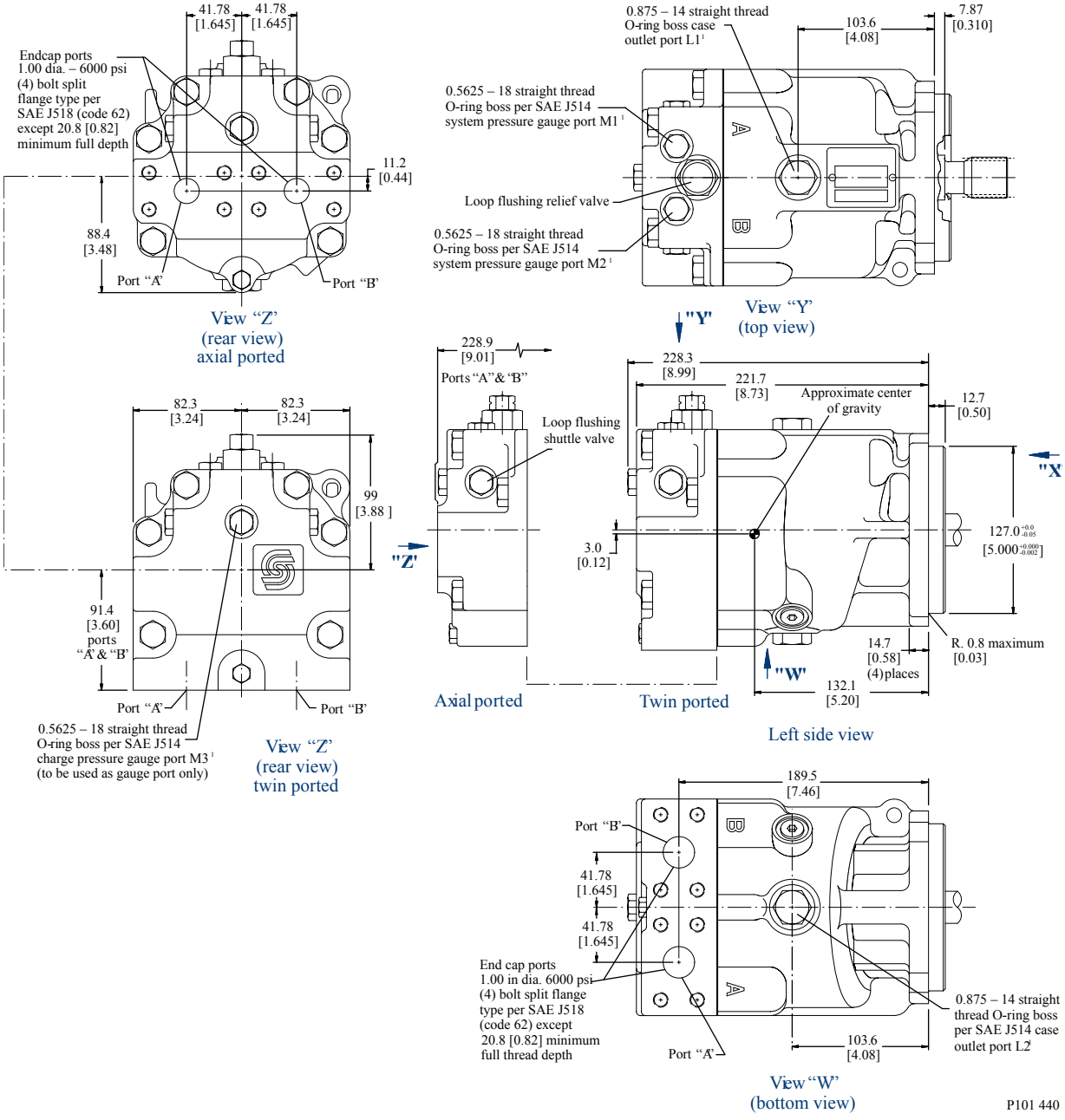

All SAE straight thread O-rings ports per SAE J1926 (fittings per SAE 514). Shaft rotation is determined by viewing motor from output shaft end. Contact your Danfoss representative for specific installation drawings

Installation Drawings

Splined output shaft options

Output shaft option	Shaft diameter T	Full spline length U	Major diameter V	Pitch diameter W	Number of teeth Y	Pitch Z
S1	24.9 [0.98]	27.9 [1.10]	31.13 [1.2258]	29.634 [1.1667]	14	12/24
C6	29 [1.14]	32.5 [1.28]	34.42 [1.3550]	33.338 [1.3125]	21	16/32

Flow direction

Shaft rotation	Flow direction	
	Port “A”	Port “B”
Clockwise (CW)	Out	In
Counterclockwise (CCW)	In	Out

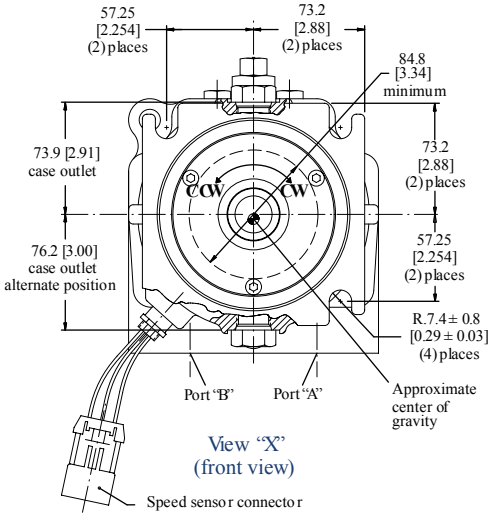

View “X”
(front view)

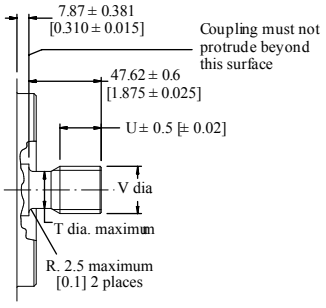

Splined shaft options
(see table)

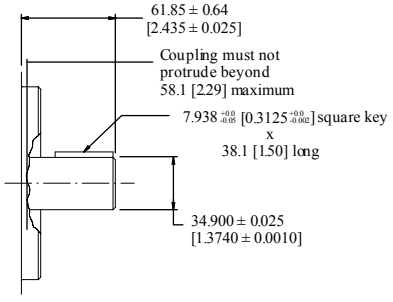

Shaft option: K1
(keyed)

P101 441

Installation Drawings

T90M75 Fixed Motor SAE Mount

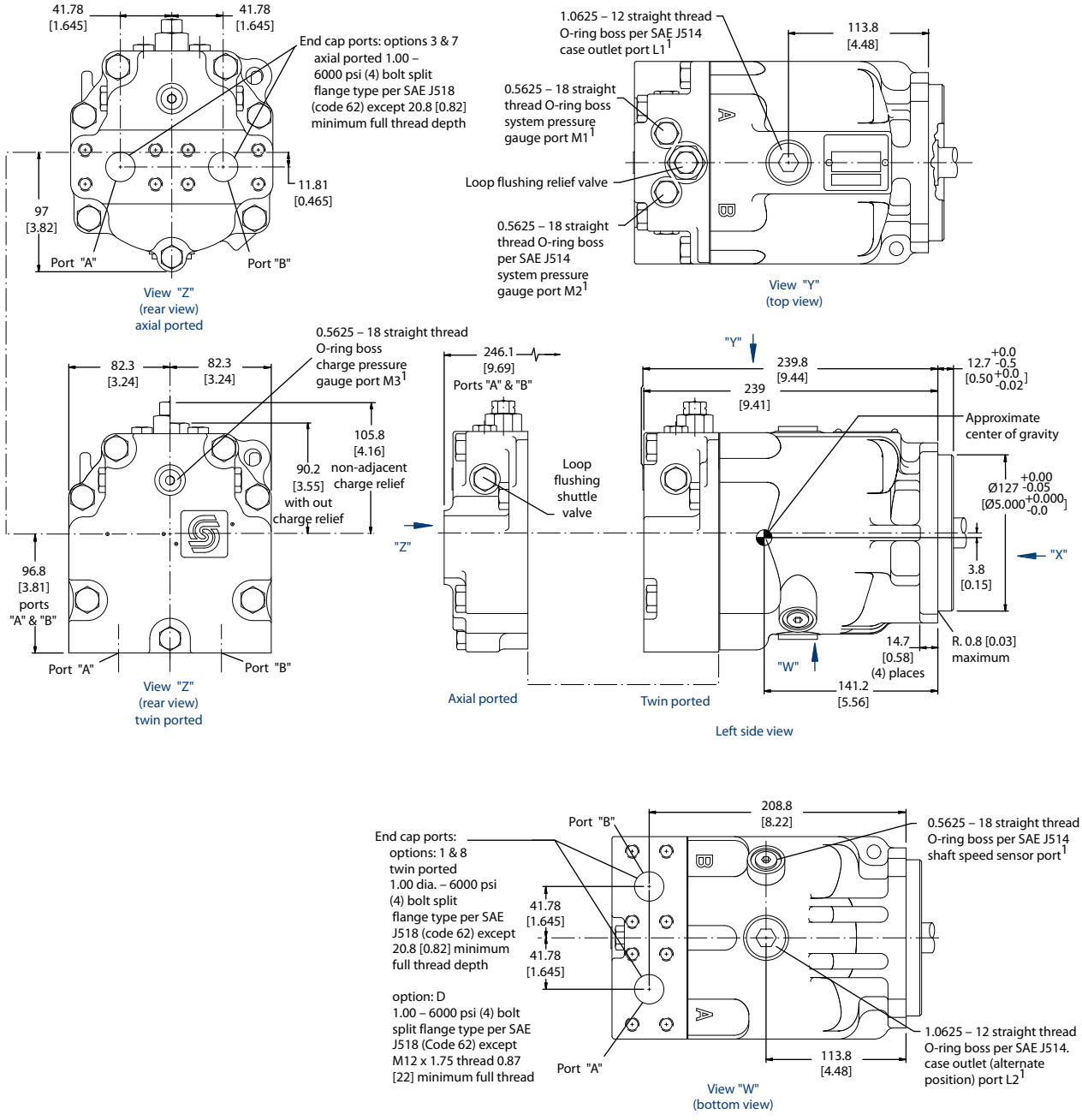

P101 448

All SAE straight thread O-rings ports per SAE J1926 (fittings per SAE 514). Shaft rotation is determined by viewing motor from output shaft end. Contact your Danfoss representative for specific installation drawings

Installation Drawings

Splined output shaft options

Output shaft option	Shaft diameter T	Full spline length U	Major diameter V	Pitch diameter W	Number of Teeth Y	Pitch Z
S1	24.9 [0.96]	27.9 [1.10]	31.13 [1.2256]	29.634 [1.667	14	12/24
C6	29 [1.14]	32.5 [1.28]	34.42 [1.355]	33.336 [1.3125]	21	16/32
C7	32.3 [1.27]	34.6 [1.37]	37.59 [1.460]	36.513 [1.4375]	23	16/32

Flow direction

Shaft rotation	Flow direction	
	Port “A”	Port “B”
Clockwise (CW)	Out	In
Counterclockwise (CCW)	In	Out

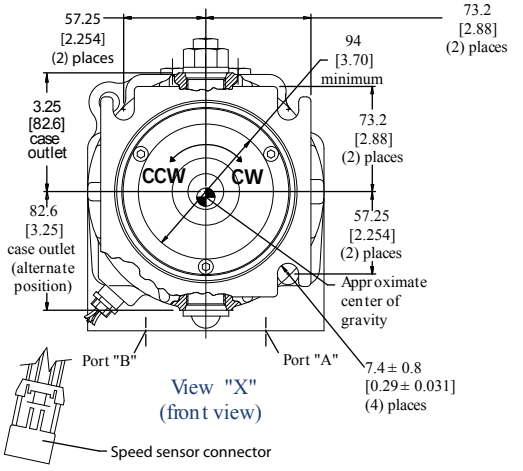

View "X"
(front view)

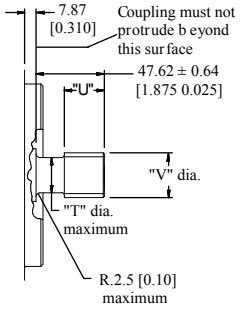

Splined shaf t options
(see table)

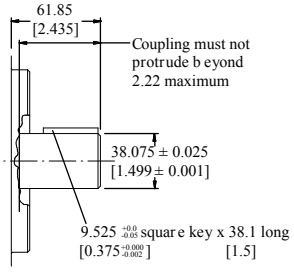

Shaft option K2
(keyed)

P101449

Installation Drawings

T90M100 Fixed Motor SAE Mount

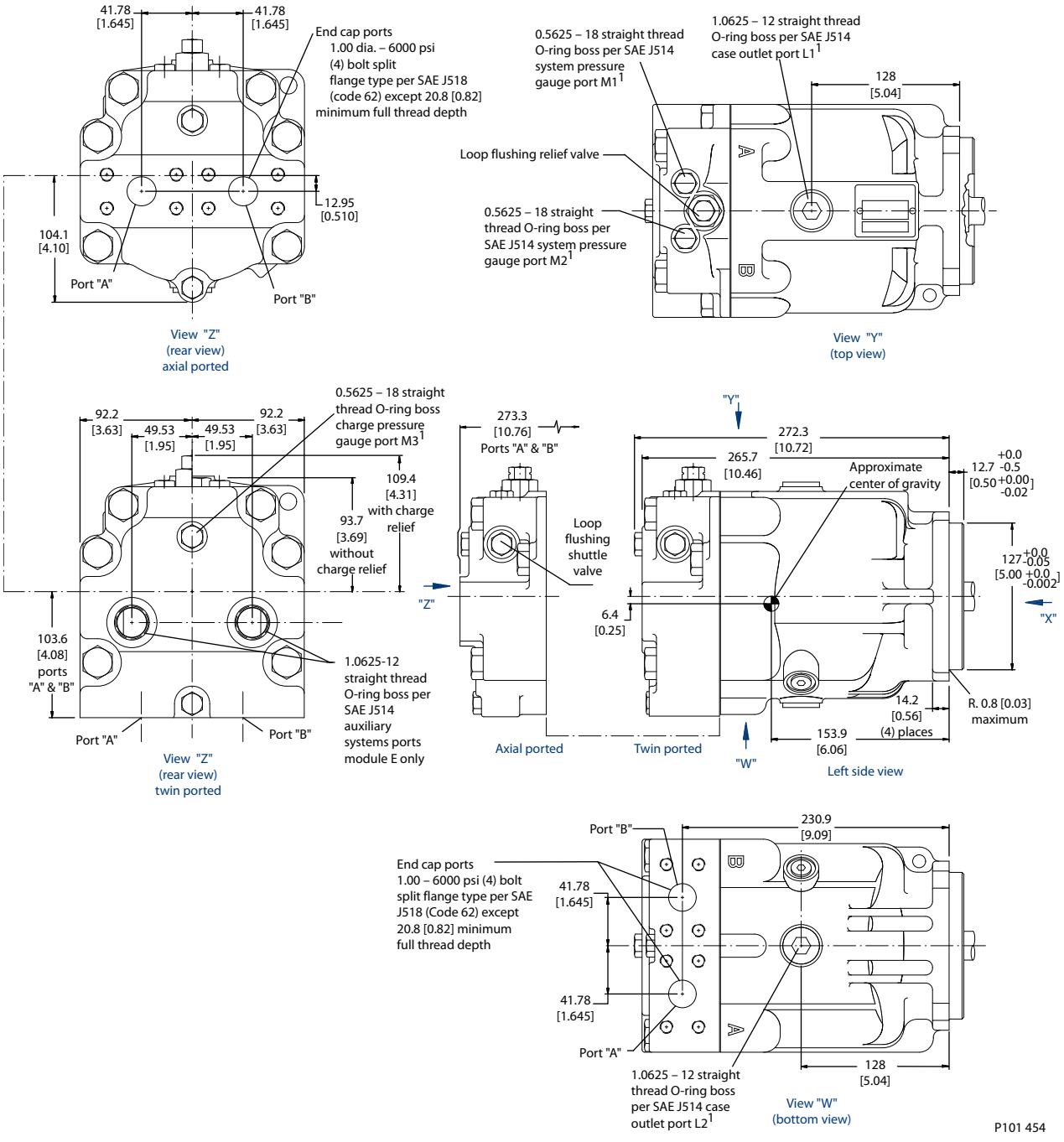

All SAE straight thread O-rings ports per SAE J1926 (fittings per SAE 514). Shaft rotation is determined by viewing motor from output shaft end. Contact your Danfoss representative for specific installation drawings

Installation Drawings

Splined output shaft options

Output shaft option	shaft diameter T	Full spline length U	Major diameter V	Pitch diameter W	Number of teeth Y	Pitch Z	Length S
S1	24.9 [0.98]	27.9 [1.10]	31.13 [1.2258]	29.634 [1.1667]	14	12/24	47.6 [1.875]
C7	32.3 [1.27]	34.8 [1.37]	37.59 [1.480]	36.513 [1.4375]	23	16/32	47.6 [1.875]
F1	34.5 [1.36]	49.5 [1.95]	43.94 [1.730]	41.275 [1.6250]	13	8/16	66.7 [2.625]
F2	34.5 [1.36]	67.1 [2.64]	43.94 [1.730]	41.275 [1.6250]	13	8/16	84.3 [3.32]

Flow direction

Shaft rotation	Flow direction	
	Port “A”	Port “B”
Clockwise (CW)	Out	In
Counterclockwise (CCW)	In	Out

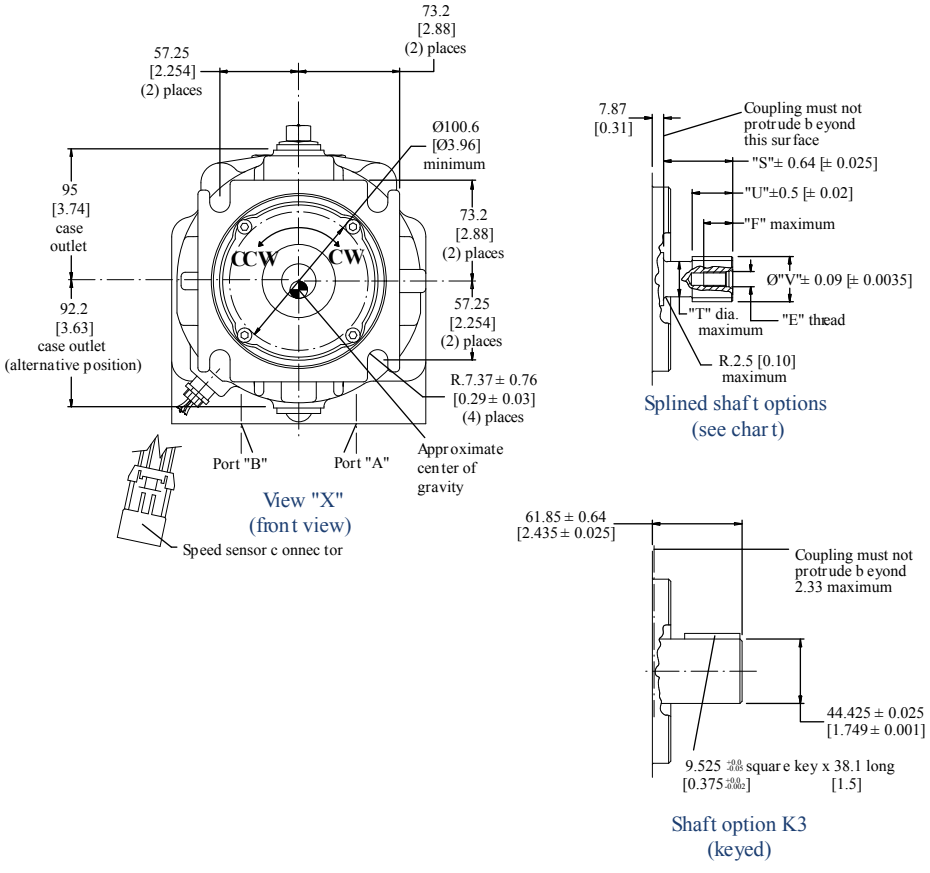

View "X"
(front view)

Splined shaft options
(see chart)

Shaft option K3
(keyed)

P101 455

ENGINEERING TOMORROW

Products we offer:

- Cartridge valves
- DCV directional control valves
- Electric converters
- Electric machines
- Electric motors
- Gear motors
- Gear pumps
- Hydraulic integrated circuits (HICs)
- Hydrostatic motors
- Hydrostatic pumps
- Orbital motors
- PLUS+1® controllers
- PLUS+1® displays
- PLUS+1® joysticks and pedals
- PLUS+1® operator interfaces
- PLUS+1® sensors
- PLUS+1® software
- PLUS+1® software services, support and training
- Position controls and sensors
- PVG proportional valves
- Steering components and systems
- Telematics

Hydro-Gear
www.hydro-gear.com

Daikin-Sauer-Danfoss
www.daikin-sauer-danfoss.com

Danfoss Power Solutions is a global manufacturer and supplier of high-quality hydraulic and electric components. We specialize in providing state-of-the-art technology and solutions that excel in the harsh operating conditions of the mobile off-highway market as well as the marine sector. Building on our extensive applications expertise, we work closely with you to ensure exceptional performance for a broad range of applications. We help you and other customers around the world speed up system development, reduce costs and bring vehicles and vessels to market faster.

Danfoss Power Solutions – your strongest partner in mobile hydraulics and mobile electrification.

Go to www.danfoss.com for further product information.

We offer you expert worldwide support for ensuring the best possible solutions for outstanding performance. And with an extensive network of Global Service Partners, we also provide you with comprehensive global service for all of our components.

Local address:

Danfoss
Power Solutions (US) Company
2800 East 13th Street
Ames, IA 50010, USA
Phone: +1 515 239 6000

Danfoss
Power Solutions GmbH & Co. OHG
Krokamp 35
D-24539 Neumünster, Germany
Phone: +49 4321 871 0

Danfoss
Power Solutions ApS
Nordborgvej 81
DK-6430 Nordborg, Denmark
Phone: +45 7488 2222

Danfoss
Power Solutions Trading (Shanghai) Co., Ltd.
Building #22, No. 1000 Jin Hai Rd
Jin Qiao, Pudong New District
Shanghai, China 201206
Phone: +86 21 2080 6201

Danfoss can accept no responsibility for possible errors in catalogues, brochures and other printed material. Danfoss reserves the right to alter its products without notice. This also applies to products already on order provided that such alterations can be made without subsequent changes being necessary in specifications already agreed.
All trademarks in this material are property of the respective companies. Danfoss and the Danfoss logotype are trademarks of Danfoss A/S. All rights reserved.