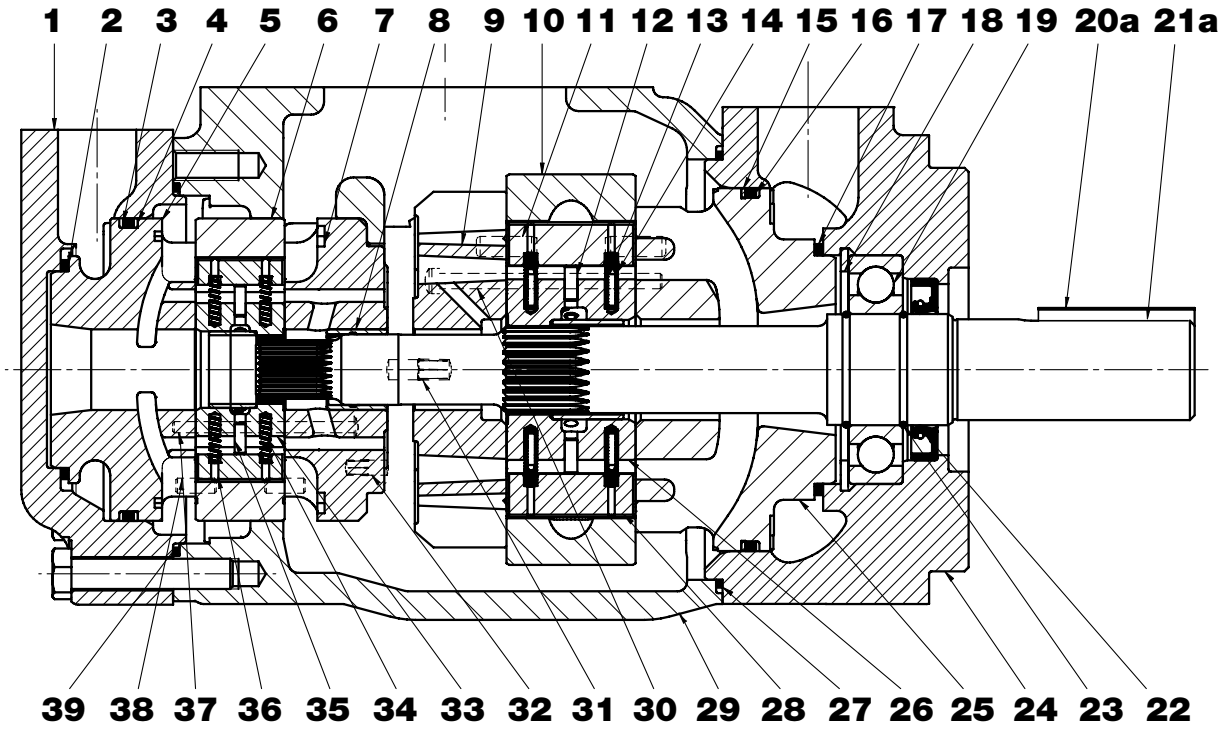

Hydraulic Pumps - Service Information
T7DB / T7DBS for variable speed drives

Denison Vane - Flügelzellen - Palettes - Palette - Paletas

ENGINEERING YOUR SUCCESS.

T7DB - T7DBS

	Item - Pos. - Réf. - Pos.	
	40	41
Mounting torque	68 Nm 50 ft.lbs	187 Nm 138 ft.lbs
Anziehdrehmoment		
Couple de serrage		
Coppia di serragio		
Par de apriete		

Recommended repair kits and assy's are bold printed
Empfohlene Austausch - Baugruppen sind fett gedruckt
Les pochettes de rechange recommandées sont imprimées en caractères gras
I kit di ricambio consigliati sono indicati in grassetto
Los juegos de reparacion recommendados y los conjuntos, estan en negrita

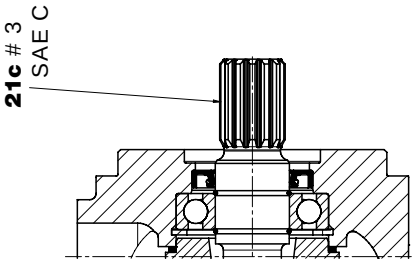

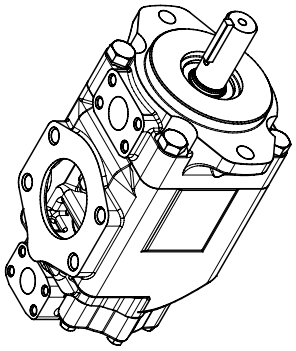

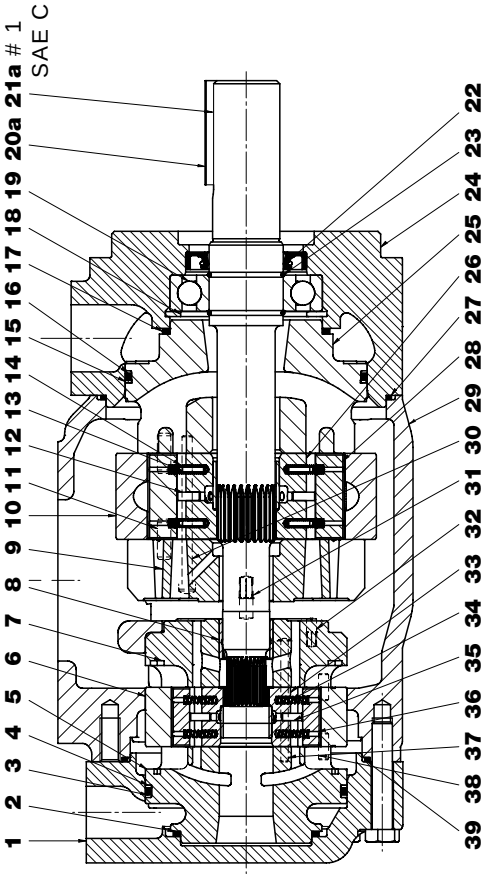

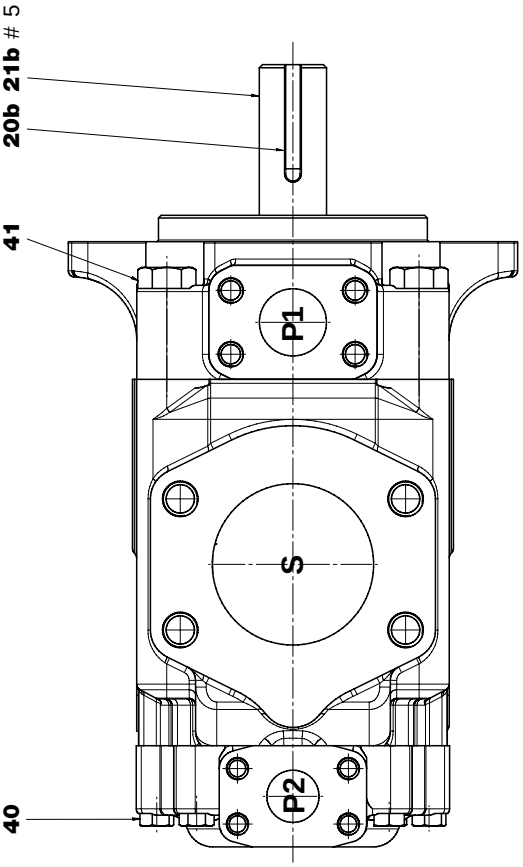

Parker Hannifin Manufacturing France SAS
VPDE, Denison Vane Pumps
Vierzon - France

Item Pos. Réf. Pos. Pos.	**Description** ***Descrizione***	**Benennung** ***Descripcion***	**Description**		Part N° Teil Nr. Code N° Cod. N° Referencia T7DB	Part N° Teil Nr. Code N° Cod. N° Referencia T7DBS	Qty Stück Qté Q.tà Cant.
1	End cap (metric 1") *Coperchio (metrica 1")*	Deckel (Metrisch 1") *Tapa (metrico 1")*	Chapeau (métrique 1")		034-71327-0		1
	End cap (UNC 1") *Coperchio (UNC 1")*	Deckel (UNC 1") *Tapa (UNC 1")*	Chapeau (UNC 1")			034-48579-0	1
2	Sq. section seal *Guarnizione*	Dichtring *Junta seccion cuadrada*	Joint section carrée	BH	671-10156-0		1
3	Sq. section seal *Guarnizione*	Dichtring *Junta seccion cuadrada*	Joint section carrée	BH	691-10238-0		1
4	Back-up ring *Anello anti-estrusione*	Stützring *Anillo*	Bague anti-extrusion	BH	618-00010-3		1
5	Port plate-pressure *Piatto distributore anter.*	Steuerplatte *Plato distribuidor-presión*	Plaque pression	BD	034-66923-0		1
6	Cam ring 003 *Anello camma 003*	Hubring 003 *Aro volumetrico 003*	Came 003	B	034-66910-0		1
	Cam ring 004 *Anello camma 004*	Hubring 004 *Aro volumetrico 004*	Came 004	B	034-66911-0		1
	Cam ring 005 *Anello camma 005*	Hubring 005 *Aro volumetrico 005*	Came 005	B	034-66912-0		1
	Cam ring 006 *Anello camma 006*	Hubring 006 *Aro volumetrico 006*	Came 006	B	034-66913-0		1
	Cam ring 007 *Anello camma 007*	Hubring 007 *Aro volumetrico 007*	Came 007	B	034-67063-0		1
	Cam ring 008 *Anello camma 008*	Hubring 008 *Aro volumetrico 008*	Came 008	B	034-66914-0		1
	Cam ring 009 *Anello camma 009*	Hubring 009 *Aro volumetrico 009*	Came 009	B	034-67383-0		1
	Cam ring 010 *Anello camma 010*	Hubring 010 *Aro volumetrico 010*	Came 010	B	034-66915-0		1
	Cam ring 011 *Anello camma 011*	Hubring 011 *Aro volumetrico 011*	Came 011	B	034-67461-0		1
	Cam ring 012 *Anello camma 012*	Hubring 012 *Aro volumetrico 012*	Came 012	B	034-67032-0		1
	Cam ring 014 *Anello camma 014*	Hubring 014 *Aro volumetrico 014*	Came 014	B	034-67409-0		1
	Cam ring 015 *Anello camma 015*	Hubring 015 *Aro volumetrico 015*	Came 015	B	034-67034-0		1
7	Port plate-rear *Piatto distributore post*	Steuerplatte *Plato distribuidor trasero*	Plaque arrière	BD	034-66922-0		1
8	Bush *Bussola*	Buchse *Cojinete de fricción*	Bague	D	034-70868-0		1
9	Port plate-rear *Piatto distributore post.*	Steuerplatte *Plato distribuidor trasero*	Plaque arrière	AD	034-67478-0		1
10	Cam ring 014 *Anello camma 014*	Hubring 014 *Aro volumetrico 014*	Came 014	A	034-67469-0		1
	Cam ring 017 *Anello camma 017*	Hubring 017 *Aro volumetrico 017*	Came 017	A	034-67470-0		1
	Cam ring 020 *Anello camma 020*	Hubring 020 *Aro volumetrico 020*	Came 020	A	034-67159-0		1
	Cam ring 022 *Anello camma 022*	Hubring 022 *Aro volumetrico 022*	Came 022	A	034-67482-0		1
	Cam ring 024 *Anello camma 024*	Hubring 024 *Aro volumetrico 024*	Came 024	A	034-67158-0		1

Parker Hannifin Manufacturing France SAS
VPDE, Denison Vane Pumps
Vierzon - France

Item Pos. Réf. Pos. Pos.	**Description** ***Descrizione***	**Benennung** ***Descripcion***	**Description**		Part N° Teil Nr. Code N° Cod. N° Referencia T7DB	Part N° Teil Nr. Code N° Cod. N° Referencia T7DBS	Qty Stück Qté Q.tà Cant.
10	Cam ring 028	Hubring 028	Came 028	A	034-67157-0		1
	Anello camma 028	*Aro volumetrico 028*					
	Cam ring 031	Hubring 031	Came 031	A	034-67156-0		1
	Anello camma 031	*Aro volumetrico 031*					
	Cam ring 035	Hubring 035	Came 035	A	034-67155-0		1
	Anello camma 035	*Aro volumetrico 035*					
	Cam ring 038	Hubring 038	Came 038	A	034-67154-0		1
	Anello camma 038	*Aro volumetrico 038*					
	Cam ring 042	Hubring 042	Came 042	A	034-67153-0		1
	Anello camma 042	*Aro volumetrico 042*					
11	Dowel pin	Zentrierstift	Goupille	A	324-21612-0		2
	Spina	*Pasador*					
12	Pin-vane holdout	Stössel	Poussoir de palette	A	034-59098-0		12
	Pistoncino di sostentamento	*Espiga empuje paleta*					
13	Spring guide	Federführung	Guide de ressort	A	034-44875-0		24
	Guida molla	*Guía de muelle*					
14	Vane spring	Feder für Flügel	Ressort de palette	A	034-41676-0		24
	Molla	*Muelle paleta*					
15	Back-up ring	Stützring	Bague anti-extrusion	AH	618-00011-3		1
	Anello anti-estrusione	*Anillo*					
16	Sq. section seal	Dichtring	Joint section carrée	AH	691-10244-0		1
	Guarnizione	*Junta seccion cuadrada*					
17	Sq. section seal	Dichtring	Joint section carrée	AH	691-10232-0		1
	Guarnizione	*Junta seccion cuadrada*					
18	Retaining ring	Sicherungsring	Circlips		356-32283-0		1
	Anello elastico	*Anillo de retención*					
19	Ball bearing	Kugellager	Roulement à billes	EFG	230-00207-0		1
	Cuscinetto a sfere	*Cojinete de bolas*					
20a	Key (code 1)	Paßfeder (Typ 1)	Clavette (code 1)	E		034-46754-0	1
	Chiavetta (codice 1)	*Chaveta (codigo 1)*					
20b	Key (code 5)	Paßfeder (Typ 5)	Clavette (code 5)	F	034-30168-0		1
	Chiavetta (codice 5)	*Chaveta (codigo 5)*					
21a	Shaft (keyed) (code1) (SAE C)	Welle für Paßfeder (Typ 1) (SAE C)	Arbre à clavette (code 1) (SAE C)	E		034-71363-0	1
	Albero a chiavetta (codice 1) (SAE C)	*Eje chaveteado (codigo 1) (SAE C)*					
21b	Shaft (keyed) (code 5) (ISO 3019-2 - G32M)	Welle für Paßfeder (Typ 5) (ISO 3019-2 - G32M)	Arbre à clavette (code 5) (ISO 3019-2 - G32M)	F	034-66815-0		1
	Albero a chiavetta (codice 5) (ISO 3019-2 - G32M)	*Eje chaveteado (codigo 5) (ISO 3019-2 - G32M)*					
21c	Shaft (splined) (code 3) (SAE C)	Vielkeilwelle (Typ 3) (SAE C)	Arbre à cannelures (code 3) (SAE C)	G		034-71361-0	1
	Albero scanalato (codice 3) (SAE C)	*Eje estriado (codigo 3) (SAE C)*					
22	Shaft seal (S1 - 0,7 bar)	Simmerring (S1 - 0,7 bar)	Joint d'arbre (S1 - 0,7 bar)	H	620-82062-0		1
	Paraolio (S1 - 0,7 bar)	*Reten eje (S1 - 0,7 bar)*					
	Shaft seal (S4 - 7 bar)	Simmerring (S4 - 7 bar)	Joint d'arbre (S4 - 7 bar)	H	620-82066-0		1
	Paraolio (S4 - 7 bar)	*Reten eje (S4 - 7 bar)*					
	Shaft seal (S5 - 7 bar)	Simmerring (S5 - 7 bar)	Joint d'arbre (S5 - 7 bar)	H	620-82066-0		1
	Paraolio (S5 - 7 bar)	*Reten eje (S5 - 7 bar)*					
23	Round section ring	Sicherungsring	Anneau	EFG	034-70853-0		2
	Anello elastico	*Anillo tórico*					
24	Mounting cap 1.1/4" (metric)	Deckel 1.1/4" (Metrisch)	Chapeau de montage 1.1/4" (métrique)		034-67595-0	034-71328-0	1
	Coperchio 1.1/4" (metrica)	*Tapa de montage 1.1/4" (metrico)*					
	Mounting cap 1.1/4" (UNC)	Deckel 1.1/4" (UNC)	Chapeau de montage 1.1/4" (UNC)			034-48135-0	1
	Coperchio 1.1/4" (UNC)	*Tapa de montage 1.1/4" (UNC)*					
25	Port plate-pressure	Steuerplatte	Plaque pression	AC	034-67479-0		1
	Piatto distributore anter.	*Plato distribuidor-presión*					

Item Pos. Réf. Pos. Pos.	**Description** ***Descrizione***	**Benennung** ***Descripcion***	**Description**		**Part N° Teil Nr. Code N° Cod. N° Referencia T7DB**	**Part N° Teil Nr. Code N° Cod. N° Referencia T7DBS**	**Qty Stück Qté Q.tà Cant.**
26	Rotor ass'y *Insieme rotore*	Rotor *Conjunto rotor*	Rotor ass.	A	S54-48910-0		1
27	Sq. section seal *Guarnizione*	Dichtring *Junta seccion cuadrada*	Joint section carrée	AH	691-10159-0		1
28	Vane *Paletta*	Flügel *Paleta*	Palette	A	034-68184-0		12
29	Housing 3" (metric) *Corpo 3" (metrico)*	Gehäuse 3" (Metrisch) *Cuerpo 3" (metrica)*	Carter 3" (métrique)		034-71326-0		1
	Housing 3" (UNC) *Corpo 3" (UNC)*	Gehäuse 3" (UNC) *Cuerpo 3" (UNC)*	Carter 3" (UNC)			034-48133-0	1
30	Screw *Vite*	Schraube *Tornille*	Vis	A	317-10300-0		2
31	Dowel pin *Spina*	Zentrierstift *Pasador*	Goupille	AC	323-82004-0		1
32	Dowel pin *Spina*	Zentrierstift *Pasador*	Goupille	BD	323-82010-0		1
33	Rotor ass'y *Insieme rotore*	Rotor *Conjunto rotor*	Rotor ass.	B	S54-47998-0		1
34	Vane spring *Molla*	Feder für Flügel *Muelle paleta*	Ressort de palette	B	034-67553-0		24
35	Pin-vane holdout *Pistoncino di sostentamento*	Stössel *Espiga empuje paleta*	Poussoir de palette	B	034-66991-0		12
36	Vane *Paletta*	Flügel *Paleta*	Palette	B	034-68303-0		12
37	Screw *Vite*	Schraube *Tornille*	Vis	B	317-06266-0		2
38	Dowel pin *Spina*	Zentrierstift *Pasador*	Goupille	B	324-21208-0		2
39	O. ring *Guarnizione*	Runddichtring *Guarnizione torica*	Joint torique	BH	671-00244-0		1
40	Screw *Vite*	Schraube *Tornille*	Vis		306-40111-0		7
41	Screw *Vite*	Schraube *Tornille*	Vis		306-40156-0		4
	REPAIR KIT ***KIT DI RICAMBIO***	**AUSTAUSCH-BAUGRUPPEN** ***CUNJUNTO REPARACION***	**POCHETTES RECHANGES**				
A	**Cart. and plate ass'y E14 C.W. (P1)** ***Ins. cart. E14 oraria (P1)***	**Pumpeneinheit E14 Rechtslauf (P1)** ***Conjunto cart. y platos E14 giro d. (P1)***	**Cart. et plaque ass. E14 rot. d. (P1)**		**S54-48942-***		**1**
A	**Cart. and plate ass'y E14 C.C.W. (P1)** ***Ins. cart. E14 antioraria (P1)***	**Pumpeneinheit E14 Linkslauf (P1)** ***Conjunto cart. y platos E14 giro i. (P1)***	**Cart. et plaque ass. E14 rot. g. (P1)**		**S54-48943-***		**1**
A	**Cart. and plate ass'y E17 C.W. (P1)** ***Ins. cart. E17 oraria (P1)***	**Pumpeneinheit E17 Rechtslauf (P1)** ***Conjunto cart. y platos E17 giro d. (P1)***	**Cart. et plaque ass. E17 rot. d. (P1)**		**S54-48944-***		**1**
A	**Cart. and plate ass'y E17 C.C.W. (P1)** ***Ins. cart. E17 antioraria (P1)***	**Pumpeneinheit E17 Linkslauf (P1)** ***Conjunto cart. y platos E17 giro i. (P1)***	**Cart. et plaque ass. E17 rot. g. (P1)**		**S54-48945-***		**1**
A	**Cart. and plate ass'y E20 C.W. (P1)** ***Ins. cart. E20 oraria (P1)***	**Pumpeneinheit E20 Rechtslauf (P1)** ***Conjunto cart. y platos E20 giro d. (P1)***	**Cart. et plaque ass. E20 rot. d. (P1)**		**S54-48946-***		**1**
A	**Cart. and plate ass'y E20 C.C.W. (P1)** ***Ins. cart. E20 antioraria (P1)***	**Pumpeneinheit E20 Linkslauf (P1)** ***Conjunto cart. y platos E20 giro i. (P1)***	**Cart. et plaque ass. E20 rot. g. (P1)**		**S54-48947-***		**1**
A	**Cart. and plate ass'y E22 C.W. (P1)** ***Ins. cart. E22 oraria (P1)***	**Pumpeneinheit E22 Rechtslauf (P1)** ***Conjunto cart. y platos E22 giro d. (P1)***	**Cart. et plaque ass. E22 rot. d. (P1)**		**S54-48948-***		**1**

Parker Hannifin Manufacturing France SAS
VPDE, Denison Vane Pumps
Vierzon - France

Item Pos. Réf. Pos. Pos.	Description *Descrizione*	Benennung *Descripcion*	Description		Part N° Teil Nr. Code N° Cod. N° Referencia T7DB	Part N° Teil Nr. Code N° Cod. N° Referencia T7DBS	Qty Stück Qté Q.tà Cant.
A	Cart. and plate ass'y E22 C.C.W. (P1)	Pumpeneinheit E22 Linkslauf (P1)	Cart. et plaque ass. E22 rot. g. (P1)		S54-48949-*		1
	Ins. cart. E22 antioraria (P1)	*Conjunto cart. y platos E22 giro i. (P1)*					
A	Cart. and plate ass'y E24 C.W. (P1)	Pumpeneinheit E24 Rechtslauf (P1)	Cart. et plaque ass. E24 rot. d. (P1)		S54-48950-*		1
	Ins. cart. E24 oraria (P1)	*Conjunto cart. y platos E24 giro d. (P1)*					
A	Cart. and plate ass'y E24 C.C.W. (P1)	Pumpeneinheit E24 Linkslauf (P1)	Cart. et plaque ass. E24 rot. g. (P1)		S54-48951-*		1
	Ins. cart. E24 antioraria (P1)	*Conjunto cart. y platos E24 giro i. (P1)*					
A	Cart. and plate ass'y E28 C.W. (P1)	Pumpeneinheit E28 Rechtslauf (P1)	Cart. et plaque ass. E28 rot. d. (P1)		S54-48952-*		1
	Ins. cart. E28 oraria (P1)	*Conjunto cart. y platos E28 giro d. (P1)*					
A	Cart. and plate ass'y E28 C.C.W. (P1)	Pumpeneinheit E28 Linkslauf (P1)	Cart. et plaque ass. E28 rot. g. (P1)		S54-48953-*		1
	Ins. cart. E28 antioraria (P1)	*Conjunto cart. y platos E28 giro i. (P1)*					
A	Cart. and plate ass'y E31 C.W. (P1)	Pumpeneinheit E31 Rechtslauf (P1)	Cart. et plaque ass. E31 rot. d. (P1)		S54-48954-*		1
	Ins. cart. E31 oraria (P1)	*Conjunto cart. y platos E31 giro d. (P1)*					
A	Cart. and plate ass'y E31 C.C.W. (P1)	Pumpeneinheit E31 Linkslauf (P1)	Cart. et plaque ass. E31 rot. g. (P1)		S54-48955-*		1
	Ins. cart. E31 antioraria (P1)	*Conjunto cart. y platos E31 giro i. (P1)*					
A	Cart. and plate ass'y E35 C.W. (P1)	Pumpeneinheit E35 Rechtslauf (P1)	Cart. et plaque ass. E35 rot. d. (P1)		S54-48956-*		1
	Ins. cart. E35 oraria (P1)	*Conjunto cart. y platos E35 giro d. (P1)*					
A	Cart. and plate ass'y E35 C.C.W. (P1)	Pumpeneinheit E35 Linkslauf (P1)	Cart. et plaque ass. E35 rot. g. (P1)		S54-48957-*		1
	Ins. cart. E35 antioraria (P1)	*Conjunto cart. y platos E35 giro i. (P1)*					
A	Cart. and plate ass'y E38 C.W. (P1)	Pumpeneinheit E38 Rechtslauf (P1)	Cart. et plaque ass. E38 rot. d. (P1)		S54-48958-*		1
	Ins. cart. E38 oraria (P1)	*Conjunto cart. y platos E38 giro d. (P1)*					
A	Cart. and plate ass'y E38 C.C.W. (P1)	Pumpeneinheit E38 Linkslauf (P1)	Cart. et plaque ass. E38 rot. g. (P1)		S54-48959-*		1
	Ins. cart. E38 antioraria (P1)	*Conjunto cart. y platos E38 giro i. (P1)*					
A	Cart. and plate ass'y E42 C.W. (P1)	Pumpeneinheit E42 Rechtslauf (P1)	Cart. et plaque ass. E42 rot. d. (P1)		S54-48960-*		1
	Ins. cart. E42 oraria (P1)	*Conjunto cart. y platos E42 giro d. (P1)*					
A	Cart. and plate ass'y E42 C.C.W. (P1)	Pumpeneinheit E42 Linkslauf (P1)	Cart. et plaque ass. E42 rot. g. (P1)		S54-48961-*		1
	Ins. cart. E42 antioraria (P1)	*Conjunto cart. y platos E42 giro i. (P1)*					
B	Cart. and plate ass'y E03 C.W. (P2)	Pumpeneinheit E03 Rechtslauf (P2)	Cart. et plaque ass. E03 rot. d. (P2)		S54-49289-*		1
	Ins. cart. E03 oraria (P2)	*Conjunto cart. y platos E03 giro d. (P2)*					
B	Cart. and plate ass'y E03 C.C.W. (P2)	Pumpeneinheit E03 Linkslauf (P2)	Cart. et plaque ass. E03 rot. g. (P2)		S54-49290-*		1
	Ins. cart. E03 antioraria (P2)	*Conjunto cart. y platos E03 giro i. (P2)*					
B	Cart. and plate ass'y E04 C.W. (P2)	Pumpeneinheit E04 Rechtslauf (P2)	Cart. et plaque ass. E04 rot. d. (P2)		S54-49291-*		1
	Ins. cart. E04 oraria (P2)	*Conjunto cart. y platos E04 giro d. (P2)*					
B	Cart. and plate ass'y E04 C.C.W. (P2)	Pumpeneinheit E04 Linkslauf (P2)	Cart. et plaque ass. E04 rot. g. (P2)		S54-49292-*		1
	Ins. cart. E04 antioraria (P2)	*Conjunto cart. y platos E04 giro i. (P2)*					
B	Cart. and plate ass'y E05 C.W. (P2)	Pumpeneinheit E05 Rechtslauf (P2)	Cart. et plaque ass. E05 rot. d. (P2)		S54-49293-*		1
	Ins. cart. E05 oraria (P2)	*Conjunto cart. y platos E05 giro d. (P2)*					
B	Cart. and plate ass'y E05 C.C.W. (P2)	Pumpeneinheit E05 Linkslauf (P2)	Cart. et plaque ass. E05 rot. g. (P2)		S54-49294-*		1
	Ins. cart. E05 antioraria (P2)	*Conjunto cart. y platos E05 giro i. (P2)*					
B	Cart. and plate ass'y E06 C.W. (P2)	Pumpeneinheit E06 Rechtslauf (P2)	Cart. et plaque ass. E06 rot. d. (P2)		S54-49295-*		1
	Ins. cart. E06 oraria (P2)	*Conjunto cart. y platos E06 giro d. (P2)*					
B	Cart. and plate ass'y E06 C.C.W. (P2)	Pumpeneinheit E06 Linkslauf (P2)	Cart. et plaque ass. E06 rot. g. (P2)		S54-49296-*		1
	Ins. cart. E06 antioraria (P2)	*Conjunto cart. y platos E06 giro i. (P2)*					
B	Cart. and plate ass'y E07 C.W. (P2)	Pumpeneinheit E07 Rechtslauf (P2)	Cart. et plaque ass. E07 rot. d. (P2)		S54-49163-*		1
	Ins. cart. E07 oraria (P2)	*Conjunto cart. y platos E07 giro d. (P2)*					
B	Cart. and plate ass'y E07 C.C.W. (P2)	Pumpeneinheit E07 Linkslauf (P2)	Cart. et plaque ass. E07 rot. g. (P2)		S54-49297-*		1
	Ins. cart. E07 antioraria (P2)	*Conjunto cart. y platos E07 giro i. (P2)*					
B	Cart. and plate ass'y E08 C.W. (P2)	Pumpeneinheit E08 Rechtslauf (P2)	Cart. et plaque ass. E08 rot. d. (P2)		S54-49298-*		1
	Ins. cart. E08 oraria (P2)	*Conjunto cart. y platos E08 giro d. (P2)*					
B	Cart. and plate ass'y E08 C.C.W. (P2)	Pumpeneinheit E08 Linkslauf (P2)	Cart. et plaque ass. E08 rot. g. (P2)		S54-49299-*		1
	Ins. cart. E08 antioraria (P2)	*Conjunto cart. y platos E08 giro i. (P2)*					
B	Cart. and plate ass'y E09 C.W. (P2)	Pumpeneinheit E09 Rechtslauf (P2)	Cart. et plaque ass. E09 rot. d. (P2)		S54-49300-*		1
	Ins. cart. E09 oraria (P2)	*Conjunto cart. y platos E09 giro d. (P2)*					

Item Pos. Réf. Pos. Pos.	Description *Descrizione*	Benennung *Descripcion*	Description		Part N° Teil Nr. Code N° Cod. N° Referencia T7DB	Part N° Teil Nr. Code N° Cod. N° Referencia T7DBS	Qty Stück Qté Q.tà Cant.
B	Cart. and plate ass'y E09 C.C.W. (P2)	Pumpeneinheit E09 Linkslauf (P2)	Cart. et plaque ass. E09 rot. g. (P2)		S54-49301-*		1
	Ins. cart. E09 antioraria (P2)	*Conjunto cart. y platos E09 giro i. (P2)*					
B	Cart. and plate ass'y E10 C.W. (P2)	Pumpeneinheit E10 Rechtslauf (P2)	Cart. et plaque ass. E10 rot. d. (P2)		S54-49302-*		1
	Ins. cart. E10 oraria (P2)	*Conjunto cart. y platos E10 giro d. (P2)*					
B	Cart. and plate ass'y E10 C.C.W. (P2)	Pumpeneinheit E10 Linkslauf (P2)	Cart. et plaque ass. E10 rot. g. (P2)		S54-49303-*		1
	Ins. cart. E10 antioraria (P2)	*Conjunto cart. y platos E10 giro i. (P2)*					
B	Cart. and plate ass'y E11 C.W. (P2)	Pumpeneinheit E11 Rechtslauf (P2)	Cart. et plaque ass. E11 rot. d. (P2)		S54-49304-*		1
	Ins. cart. E11 oraria (P2)	*Conjunto cart. y platos E11 giro d. (P2)*					
B	Cart. and plate ass'y E11 C.C.W. (P2)	Pumpeneinheit E11 Linkslauf (P2)	Cart. et plaque ass. E11 rot. g. (P2)		S54-49305-*		1
	Ins. cart. E11 antioraria (P2)	*Conjunto cart. y platos E11 giro i. (P2)*					
B	Cart. and plate ass'y E12 C.W. (P2)	Pumpeneinheit E12 Rechtslauf (P2)	Cart. et plaque ass. E12 rot. d. (P2)		S54-49306-*		1
	Ins. cart. E12 oraria (P2)	*Conjunto cart. y platos E12 giro d. (P2)*					
B	Cart. and plate ass'y E12 C.C.W. (P2)	Pumpeneinheit E12 Linkslauf (P2)	Cart. et plaque ass. E12 rot. g. (P2)		S54-49307-*		1
	Ins. cart. E12 antioraria (P2)	*Conjunto cart. y platos E12 giro i. (P2)*					
B	Cart. and plate ass'y E14 C.W. (P2)	Pumpeneinheit E14 Rechtslauf (P2)	Cart. et plaque ass. E14 rot. d. (P2)		S54-49308-*		1
	Ins. cart. E14 oraria (P2)	*Conjunto cart. y platos E14 giro d. (P2)*					
E	Cart. and plate ass'y E14 C.C.W. (P2)	Pumpeneinheit E14 Linkslauf (P2)	Cart. et plaque ass. E14 rot. g. (P2)		S54-49309-*		1
	Ins. cart. E14 antioraria (P2)	*Conjunto cart. y platos E14 giro i. (P2)*					
B	Cart. and plate ass'y E15 C.W. (P2)	Pumpeneinheit E15 Rechtslauf (P2)	Cart. et plaque ass. E15 rot. d. (P2)		S54-49310-*		1
	Ins. cart. E15 oraria (P2)	*Conjunto cart. y platos E15 giro d. (P2)*					
B	Cart. and plate ass'y E15 C.C.W. (P2)	Pumpeneinheit E15 Linkslauf (P2)	Cart. et plaque ass. E15 rot. g. (P2)		S54-49311-*		1
	Ins. cart. E15 antioraria (P2)	*Conjunto cart. y platos E15 giro i. (P2)*					
C	Port plate rear and bush ass'y (P1)	Steuerplatte mit buchse (P1)	Plaque arr. et bague ass. (P1)		S24-76916-0		1
	Ins. piatto dist. post. (P1)	*Conj. plato dist. tras. con coj. Fricción (P1)*					
D	Port plate rear and bush ass'y (P2)	Steuerplatte mit Buchse (P2)	Plaque arrière et bague ass. (P2)		S24-51527-0		1
	Ins. piatto distributore post. (P2)	*Conj. plato dist. trasero con coj. fricción (P2)*					
E	Shaft and bearing ass'y (code 1)	Baugruppe (Welle u. Lager) (Typ 1)	Arbre et roulement ass. (code 1)			S14-42520-0	1
	Ins. albero (codice 1)	*Conjunto eje cojinete (codigo 1)*					
F	Shaft and bearing ass'y (code 5)	Baugruppe (Welle u. Lager) (Typ 5)	Arbre et roulement ass. (code 5)		S24-45065-0		1
	Ins. albero (codice 5)	*Conjunto eje cojinete (codigo 5)*					
G	Shaft and bearing ass'y (code 3)	Baugruppe (Welle u. Lager) (Typ 3)	Arbre et roulement ass. (code 3)			S14-42518-0	1
	Ins. albero (codice 3)	*Conjunto eje cojinete (codigo 3)*					
H	Seal kit (S1 - 0,7 bar)	Dichtringsatz (S1 - 0,7 bar)	Pochette de joint (S1 - 0,7 bar)		S24-10170-0		1
	Serie guarnizioni (S1 - 0,7 bar)	*Juego de juntas (S1 - 0,7 bar)*					
H	Seal kit (S4 - 7 bar)	Dichtringsatz (S4 - 7 bar)	Pochette de joint (S4 - 7 bar)		S24-10170-4		1
	Serie guarnizioni (S4 - 7 bar)	*Juego de juntas (S4 - 7 bar)*					
H	Seal kit (S5 - 7 bar)	Dichtringsatz (S5 - 7 bar)	Pochette de joint (S5 - 7 bar)		S24-10170-5		1
	Serie guarnizioni (S5 - 7 bar)	*Juego de juntas (S5 - 7 bar)*					
	Seal class	Dichtringsatz	Classe de joint		S**-*****-*		
	Tipo di guarnizioni	*Clase juntas*					
					S1 BUNA N S**-*****-0		
					S4 EPDM S**-*****-4		
					S5 VITON® S**-*****-5		

Parker Hannifin Manufacturing France SAS
VPDE, Denison Vane Pumps
Vierzon - France

Model Code — Typenschlüssel — Désignation - type

Model number	Typenbezeichnung :	Numéro du modèle :	T7DB / T7DBS	-	E42	-	E10	-	1	R	00	-	A1	M0	-	NOP	-	##

T7DB series - ISO 2 bolts 3019-2
125 A2 HW
T7DBS series - SAE C - 2 bolts
Mounting flange J744

Baureihe T7DB - ISO 2-Loch 3019-2
125 A2 HW
Baureihe T7DBS - SAE C 2-Loch
Montageflansch, J744

SérieT7DB - ISO 2 trous 3019-2
125 A2 HW
Série T7DBS - SAE C 2 trous
Bride de montage J744

One letter can be added to specify special parts in series

Optionen

Une lettre peut être ajoutée pour spécifier les pièces spéciales dans la série.

Cam ring P1
(Volumetric displacement) (ml/rev.)
E14 = 44,0
E17 = 55,0
E20 = 66,0
E22 = 70,3

Hubring P1
(Geometrisches Fördervolumen) (cm^3/U)
E24 = 81,1
E28 = 90,0
E31 = 99,2
E35 = 113,4

Came P1
(Cylindrée théorique) (cm^3/tr)
E38 = 120,6
E42 = 137,5

Cam ring P2
(Volumetric displacement) (ml/rev.)
E03 = 9,8
E04 = 12,8
E05 = 15,9
E06 = 19,8

Hubring P2
(Geometrisches Fördervolumen) (cm^3/U)
E07 = 22,5
E08 = 24,9
E09 = 28,0
E10 = 31,8

Came P2
(Cylindrée théorique) (cm^3/tr)
E11 = 35,0
E12 = 41,0
E14 = 45,0
E15 = 50,0

Type of shaft T7DBS
1 = keyed (SAE C)
3 = splined 12/24 (SAE C)

Art der Welle T7DBS
1 = Paßfederwelle (SAE C)
3 = Vielkeilwelle 12/24 (SAE C)

Type d'arbre T7DBS
1 = à clavette (SAE C)
3 = à cannelures 12/24 (SAE C)

Type of shaft T7DB
5 = keyed (ISO 3019-2 - G32M)

Art der Welle T7DB
5 = Paßfederwelle (ISO 3019-2 - G32M)

Type d'arbre T7DB
5 = à clavette (ISO 3019-2 - G32M)

Direction of rotation
R = Clockwise
L = Counter-clockwise

Drehrichtung
R = Rechtslauf
L = Linkslauf

Sens de rotation
R = à droite
L = à gauche

Porting combination
00 = standard

Lage der Anschlüsse
00 = standard

Combinaison des orifices
00 = standard

Design letter

Ausführungsbuchstabe

Conception

Seal class
1 = S1 - BUNA N
4 = S4 - EPDM
5 = S5 - VITON®

Dichtungsklasse
1 = S1 - BUNA N
4 = S4 - EPDM
5 = S5 - VITON®

Classe de joint
1 = S1 - BUNA N
4 = S4 - EPDM
5 = S5 - VITON®

Mounting w/connection variables
T7DB - S = 3" P1 = 1.1/4" P2 = 1"
M0 = 4 bolts SAE flanges (J518c) - Metric threads

T7DBS - S = 3" P1 = 1.1/4" P2 = 1"
00 = 4 bolts SAE flanges (J518c) - UNC threads
M0 = 4 bolts SAE flanges (J518c) - Metric threads

Gehäuse-Anschlußgröße
T7DB - S = 3" P1 = 1.1/4" P2 = 1"
M0 = SAE 4-Loch-Flansch (J518c) - Metrisches Gewinde

T7DBS - S = 3" P1 = 1.1/4" P2 = 1"
00 = SAE 4-Loch-Flansch (J518c) - UNC Gewinde
M0 = SAE 4-Loch-Flansch (J518c) - Metrisches Gewinde

Option sur orifices
T7DB - S = 3" P1 = 1.1/4" P2 = 1"
M0 = Bride 4 trous SAE (J518c) - Taraudages métriques

T7DBS - S = 3" P1 = 1.1/4" P2 = 1"
00 = Bride 4 trous SAE (J518c) - Taraudages UNC
M0 = Bride 4 trous SAE (J518c) - Taraudages métriques

Options
NOP = Not painted

Optionen
NOP = Unlackiert

Options
NOP = Sans peinture

Modifications

Modifikationen

Modifications

Designazion — Clave de designación

T7DB / T7DBS . - E42 - E10 - 1 R 00 - A 1 M0 - NOP - ïïï

Sigla :

Serie T7DB - ISO 2 fori 3019-2
125 A2 HW
Serie T7DBS - SAE C 2 fori
Flangia di montaggio J744

Una lettera può essere aggiunta per specificare parti speciali nella serie

Tipo di cartuccia P1
(Cilindrata) (ml/giro)
E14 = 44,0
E17 = 55,0
E20 = 66,0
E22 = 70,3
E24 = 81,1

Tipo di cartuccia P2
(Cilindrata) (ml/giro)
E03 = 9,8
E04 = 12,8
E05 = 15,9
E06 = 19,8
E07 = 22,5
E08 = 24,9

Tipo di albero T7DBS
1 = a chiavetta (SAE C)
3 = scanalato 12/24 (SAE C)

Tipo di albero T7DB
5 = a chiavetta (ISO 3019-2 - G32M)

Senso di rotazione
R = Orario
L = Antiorario

Orientamento delle bocche
00 = standard

Disegno

Tipo di guarnizioni
1 = S1 - BUNA N
4 = S4 - EPDM
5 = S5 - VITON®

Dimensioni delle bocche
T7DB - S = 3" P1 = 1.1/4" P2 = 1"
M0 = Flangia SAE 4 drenaggio (J518c) - Filetattura metrica

T7DBS - S = 3" P1 = 1.1/4" P2 = 1"
00 = Flangia SAE 4 drenaggio (J518c) - Filetattura UNC
M0 = Flangia SAE 4 drenaggio (J518c) - Filetattura metrica

Opzioni
NOP = Senza vernice

Modifiche

Una letra puede ser añadide pasa especificar piezas especiales en la serie

Aro volumetrico P1
(Cilindrada) (ml/rev)
E28 = 90,0
E31 = 99,2
E35 = 113,4
E38 = 120,6
E42 = 137,5

Aro volumetrico P2
(Cilindrada) (ml/rev)
E09 = 28,0
E10 = 31,8
E11 = 35,0
E12 = 41,0
E14 = 45,0
E15 = 50,0

Tipo de eje T7DBS
1 = chaveteado (SAE C)
3 = estriado 12/24 (SAE C)

Tipo de eje T7DB
5 = chaveteado (ISO 3019-2 - G32M)

Sentido de giro
R = Derecha
L = Izquierda

Posición de bocas
00 = estándar

Letra de diseño

Clase de juntas
1 = S1 - BUNA N
4 = S4 - EPDM
5 = S5 - VITON®

Opciones de las bocas
T7DB - S = 3" P1 = 1.1/4" P2 = 1"
M0 = Brida SAE 4 taladros (J518c) - Rosca metrico

T7DBS - S = 3" P1 = 1.1/4" P2 = 1"
00 = Brida SAE 4 taladros (J518c)- Rosca UNC
M0 = Brida SAE 4 taladros (J518c) - Rosca metrico

Opciones
NOP = Sin pintura

Modificaciones

Parker Hannifin Manufacturing France SAS
VPDE, Denison Vane Pumps
Vierzon - France

WARNING — USER RESPONSIBILITY

FAILURE OR IMPROPER SELECTION OR IMPROPER USE OF THE PRODUCTS DESCRIBED HEREIN OR RELATED ITEMS CAN CAUSE DEATH, PERSONAL INJURY AND PROPERTY DAMAGE.

- This document and other information from Parker-Hannifin Corporation, its subsidiaries and authorized distributors provide product or system options for further investigation by users having technical expertise.

- The user, through its own analysis and testing, is solely responsible for making the final selection of the system and components and assuring that all performance, endurance, maintenance, safety and warning requirements of the application are met. The user must analyze all aspects of the application, follow applicable industry standards, and follow the information concerning the product in the current product catalog and in any other materials provided from Parker or its subsidiaries or authorized distributors.

- To the extent that Parker or its subsidiaries or authorized distributors provide component or system options based upon data or specifications provided by the user, the user is responsible for determining that such data and specifications are suitable and sufficient for all applications and reasonably foreseeable uses of the components or systems.

Offer of Sale

Please contact your Parker representation for a detailed ”Offer of Sale”.

Parker Hannifin Manufacturing France SAS
VPDE, Denison Vane Pumps
Vierzon - France

Parker Worldwide

Europe, Middle East, Africa

AE – United Arab Emirates,
Dubai
Tel: +971 4 8127100
parker.me@parker.com

AT – Austria, Wiener Neustadt
Tel: +43 (0)2622 23501-0
parker.austria@parker.com

AT – Eastern Europe, Wiener Neustadt
Tel: +43 (0)2622 23501 900
parker.easteurope@parker.com

AZ – Azerbaijan, Baku
Tel: +994 50 22 33 458
parker.azerbaijan@parker.com

BE/LU – Belgium, Nivelles
Tel: +32 (0)67 280 900
parker.belgium@parker.com

BG – Bulgaria, Sofia
Tel: +359 2 980 1344
parker.bulgaria@parker.com

BY – Belarus, Minsk
Tel: +48 (0)22 573 24 00
parker.poland@parker.com

CH – Switzerland, Etoy
Tel: +41 (0)21 821 87 00
parker.switzerland@parker.com

CZ – Czech Republic, Klecany
Tel: +420 284 083 111
parker.czechrepublic@parker.com

DE – Germany, Kaarst
Tel: +49 (0)2131 4016 0
parker.germany@parker.com

DK – Denmark, Ballerup
Tel: +45 43 56 04 00
parker.denmark@parker.com

ES – Spain, Madrid
Tel: +34 902 330 001
parker.spain@parker.com

FI – Finland, Vantaa
Tel: +358 (0)20 753 2500
parker.finland@parker.com

FR – France, Contamine s/Arve
Tel: +33 (0)4 50 25 80 25
parker.france@parker.com

GR – Greece, Athens
Tel: +30 210 933 6450
parker.greece@parker.com

HU – Hungary, Budaoers
Tel: +36 23 885 470
parker.hungary@parker.com

IE – Ireland, Dublin
Tel: +353 (0)1 466 6370
parker.ireland@parker.com

IT – Italy, Corsico (MI)
Tel: +39 02 45 19 21
parker.italy@parker.com

KZ – Kazakhstan, Almaty
Tel: +7 7273 561 000
parker.easteurope@parker.com

NL – The Netherlands, Oldenzaal
Tel: +31 (0)541 585 000
parker.nl@parker.com

NO – Norway, Asker
Tel: +47 66 75 34 00
parker.norway@parker.com

PL – Poland, Warsaw
Tel: +48 (0)22 573 24 00
parker.poland@parker.com

PT – Portugal
Tel: +351 22 999 7360
parker.portugal@parker.com

RO – Romania, Bucharest
Tel: +40 21 252 1382
parker.romania@parker.com

RU – Russia, Moscow
Tel: +7 495 645-2156
parker.russia@parker.com

SE – Sweden, Spånga
Tel: +46 (0)8 59 79 50 00
parker.sweden@parker.com

SK – Slovakia, Banská Bystrica
Tel: +421 484 162 252
parker.slovakia@parker.com

SL – Slovenia, Novo Mesto
Tel: +386 7 337 6650
parker.slovenia@parker.com

TR – Turkey, Istanbul
Tel: +90 216 4997081
parker.turkey@parker.com

UA – Ukraine, Kiev
Tel: +48 (0)22 573 24 00
parker.poland@parker.com

UK – United Kingdom, Warwick
Tel: +44 (0)1926 317 878
parker.uk@parker.com

ZA – South Africa, Kempton Park
Tel: +27 (0)11 961 0700
parker.southafrica@parker.com

North America

CA – Canada, Milton, Ontario
Tel: +1 905 693 3000

US – USA, Cleveland (industrial)
Tel: +1 216 896 3000

US – USA, Elk Grove Village (mobile)
Tel: +1 847 258 6200

Asia Pacific

AU – Australia, Castle Hill
Tel: +61 (0)2-9634 7777

CN – China, Shanghai
Tel: +86 21 2899 5000

HK – Hong Kong
Tel: +852 2428 8008

ID – Indonesia, Tangerang
Tel: +62 21 7588 1906

IN – India, Mumbai
Tel: +91 22 6513 7081-85

JP – Japan, Fujisawa
Tel: +81 (0)4 6635 3050

KR – South Korea, Seoul
Tel: +82 2 559 0400

MY – Malaysia, Shah Alam
Tel: +60 3 7849 0800

NZ – New Zealand, Mt Wellington
Tel: +64 9 574 1744

SG – Singapore
Tel: +65 6887 6300

TH – Thailand, Bangkok
Tel: +662 186 7000

TW – Taiwan, New Taipei City
Tel: +886 2 2298 8987

VN – Vietnam, Ho Chi Minh City
Tel: +84 8 3999 1600

South America

AR – Argentina, Buenos Aires
Tel: +54 3327 44 4129

BR – Brazil, Cachoeirinha RS
Tel: +55 51 3470 9144

CL – Chile, Santiago
Tel: +56 2 623 1216

MX – Mexico, Toluca
Tel: +52 72 2275 4200

Ed. 2016-04-04

© 2017 Parker Hannifin Corporation. All rights reserved.

Catalogue HY29-0126-M1/EU, 06/2017

EMEA Product Information Centre
Free phone: 00 800 27 27 5374
(from AT, BE, CH, CZ, DE, DK, EE, ES, FI, FR, IE, IL, IS, IT, LU, MT, NL, NO, PL, PT, RU, SE, SK, UK, ZA)

US Product Information Centre
Toll-free number: 1-800-27 27 537

www.parker.com

Your local authorized Parker distributor