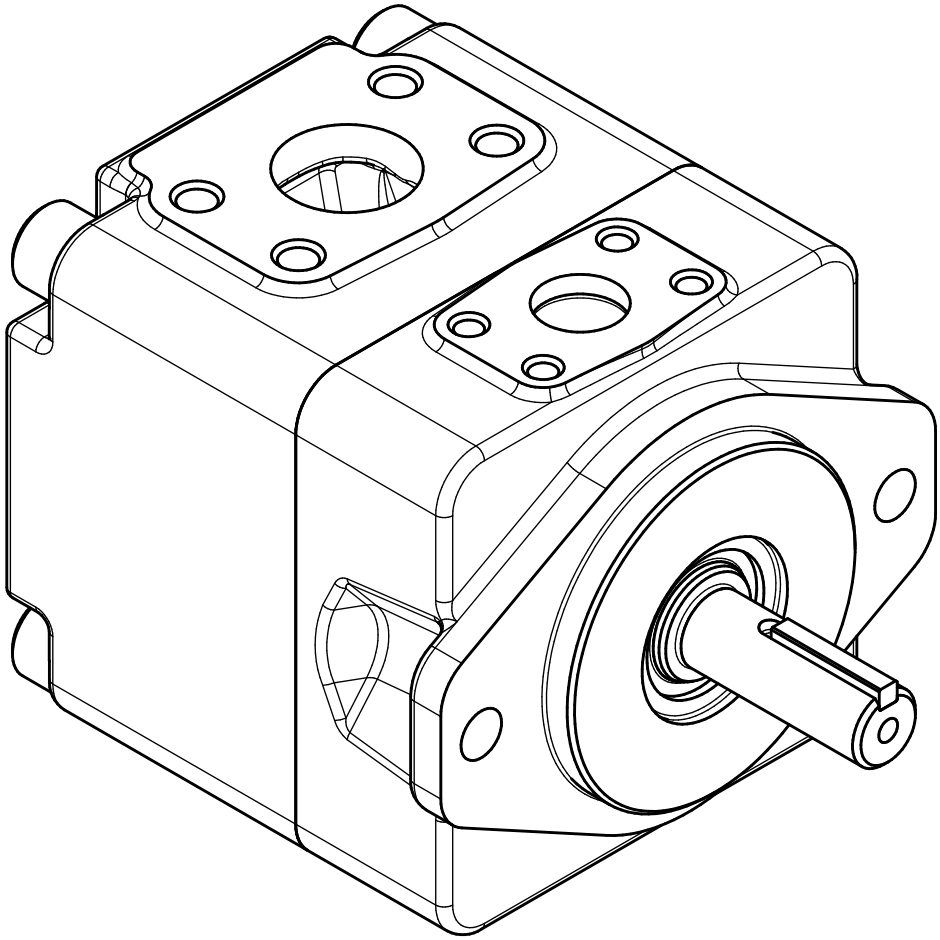

Hydraulic Pumps - Service Information
T7B - T7BS

Denison Vane Technology

Parker

ENGINEERING YOUR SUCCESS.

Model No. **T7B or T7BS - B10 - 1 R 00 - A 1 - M0 - ..**

T7B series - 100 A2 HW
ISO 2 bolts 3019-2 mounting flange
T7BS series - SAE B 2 bolts
J744 mounting flange

Displacement
Volumetric displacement (ml/rev.)

B02 = 5,8	B07 = 22,5	B11 = 35,0
B03 = 9,8	B08 = 24,9	B12 = 41,0
B04 = 12,8	B09 = 28,0	B14 = 45,0
B05 = 15,9	B10 = 31,8	B15 = 50,0
B06 = 19,8		

Type of shaft T7B - T7BS
2 = keyed (ISO R775)

Type of shaft T7BS
1 = keyed (SAE B) Ø 22,2
3 = splined (SAE B) 13 teeth
4 = splined (SAE BB) 15 teeth

Direction of rotation (shaft end view)
R = Clockwise
L = Counter-clockwise

Modifications

Mounting w/connection variables
4 bolts SAE flange J518

	Metric thread		UNC thread	
P	1"	3/4"	1"	3/4"
S	1.1/2"			
T7B	M0	M1		
T7BS	M0	M1	00	01

Seal class
1 = S1 BUNA N - 0,7 bar max. (for mineral oil)
4 = S4 EPDM - 0,7 bar max. (for fire resistant fluids)
5 = S5 VITON® - 0,7 bar max. (for mineral oil and fire resistant fluids)

Design letter

Porting combination
00 = standard

Position of the ports

P = Pressure port
S = Suction port

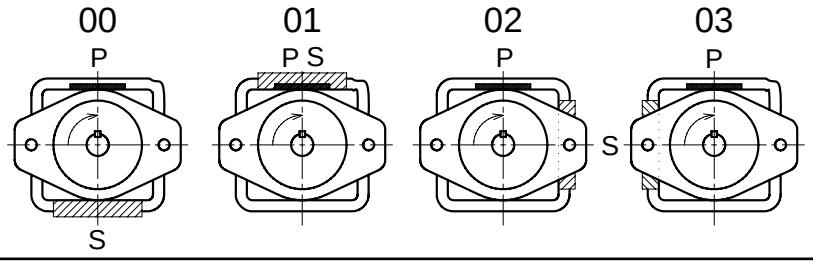

Parker Hannifin
Pump & Motor Division Europe
Vierzon - France

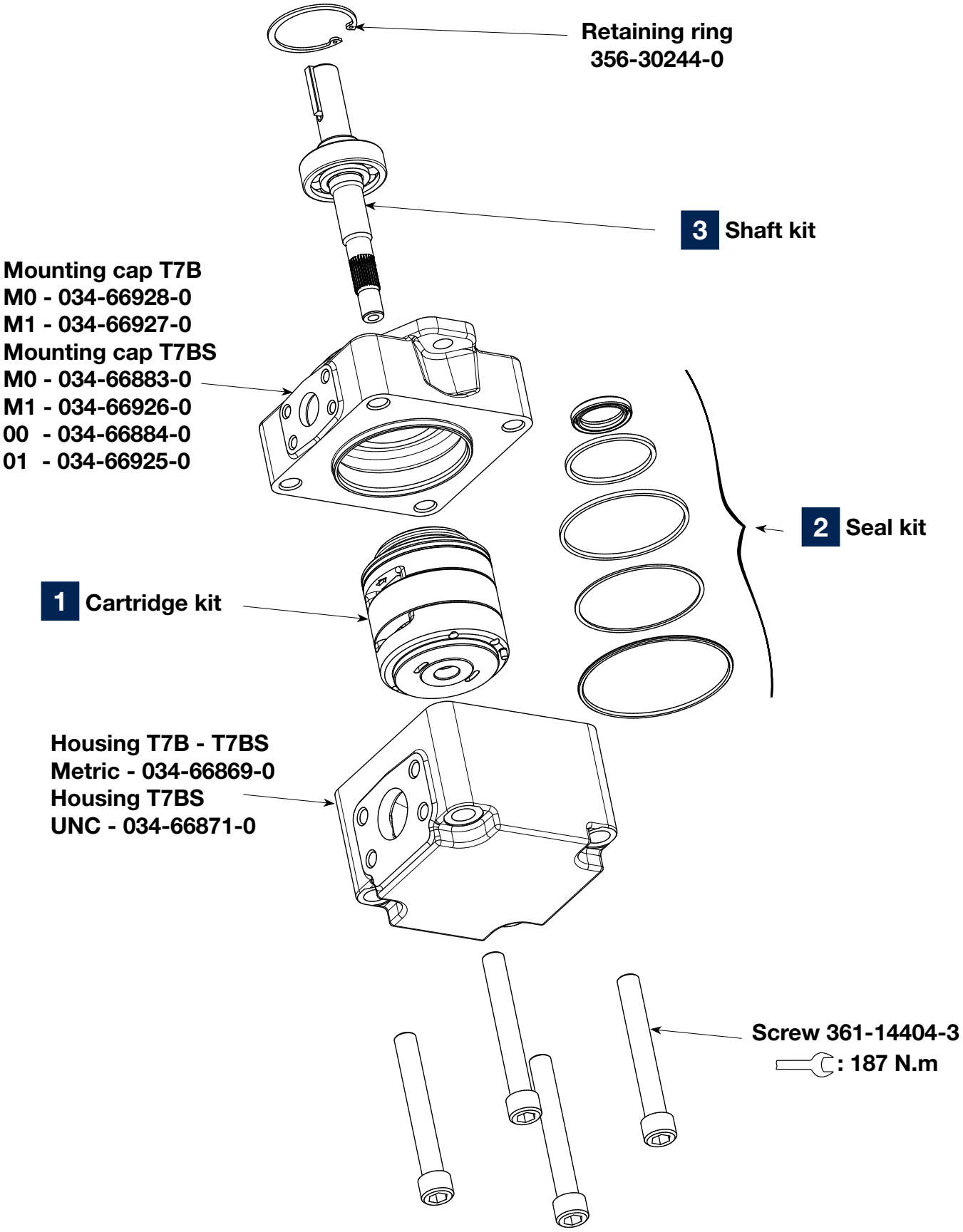

Parker Hannifin
Pump & Motor Division Europe
Vierzon - France

1 Cartrige kit (Preferred)

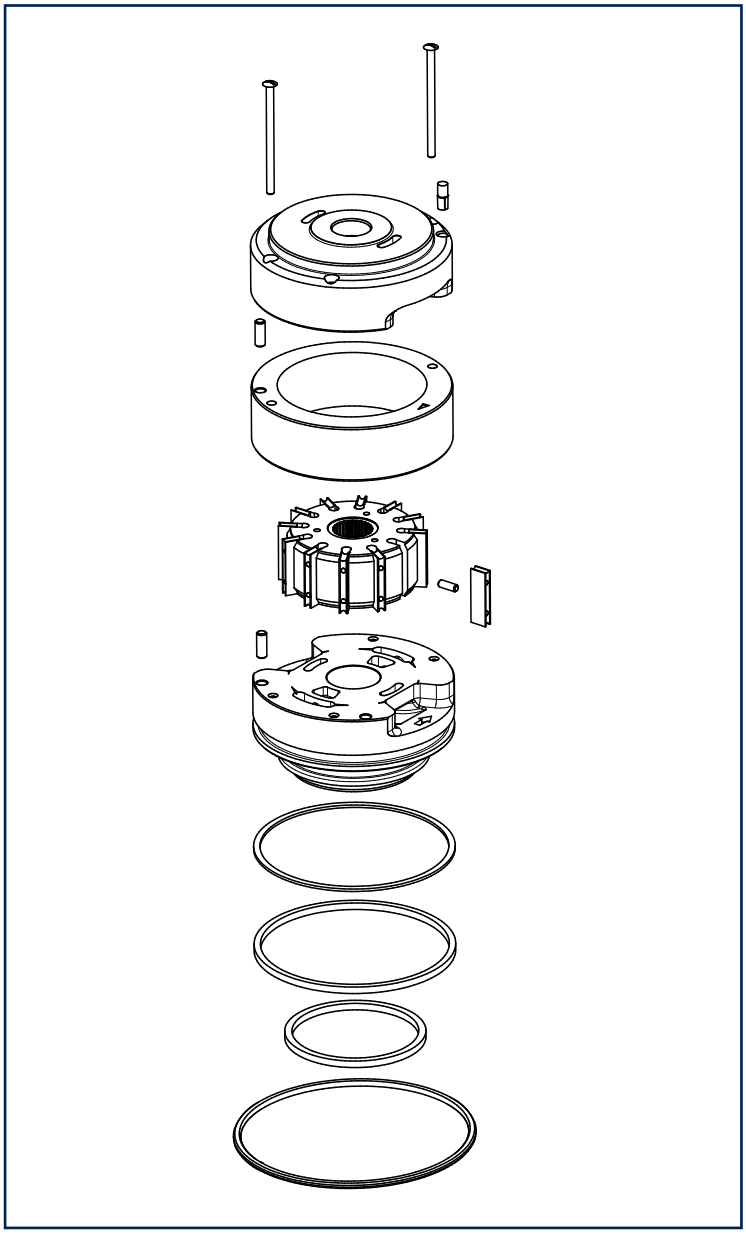

T7B - T7BS - **B** -** * ***** ** - * * - **

Cartridge kit	Code N°	
Displacement	R (CW)	L (CCW)
B02	S24-50144-*	S24-50145-*
B03	S24-50146-*	S24-50147-*
B04	S24-50148-*	S24-50149-*
B05	S24-50150-*	S24-50151-*
B06	S24-50152-*	S24-50153-*
B07	S24-59970-*	S24-59971-*
B08	S24-50154-*	S24-50155-*
B09	S24-77219-*	S24-77220-*
B10	S24-50156-*	S24-50157-*
B11	S24-77221-*	S24-77223-*
B12	S24-59005-*	S24-59006-*
B14	S24-72881-*	S24-77224-*
B15	S24-59007-*	S24-59008-*

* = 0 = S1 BUNA N
* = 4 = S4 EPDM
* = 5 = S5 VITON®

Parker Hannifin
Pump & Motor Division Europe
Vierzon - France

Cartridge loose items

1 x	1 x		1 x	12 x	12 x	1 x
S24-49791-0	002	034-66909-0	S24-49820-0	034-66917-0	034-66991-0	034-66923-0
	003	034-66910-0				
	004	034-66911-0				
	005	034-66912-0				
	006	034-66913-0				
	007	034-67063-0				
	008	034-66914-0				
	009	034-67383-0				
	010	034-66915-0				
	011	034-67461-0				
	012	034-67032-0				
	014	034-67409-0				
	015	034-67034-0				

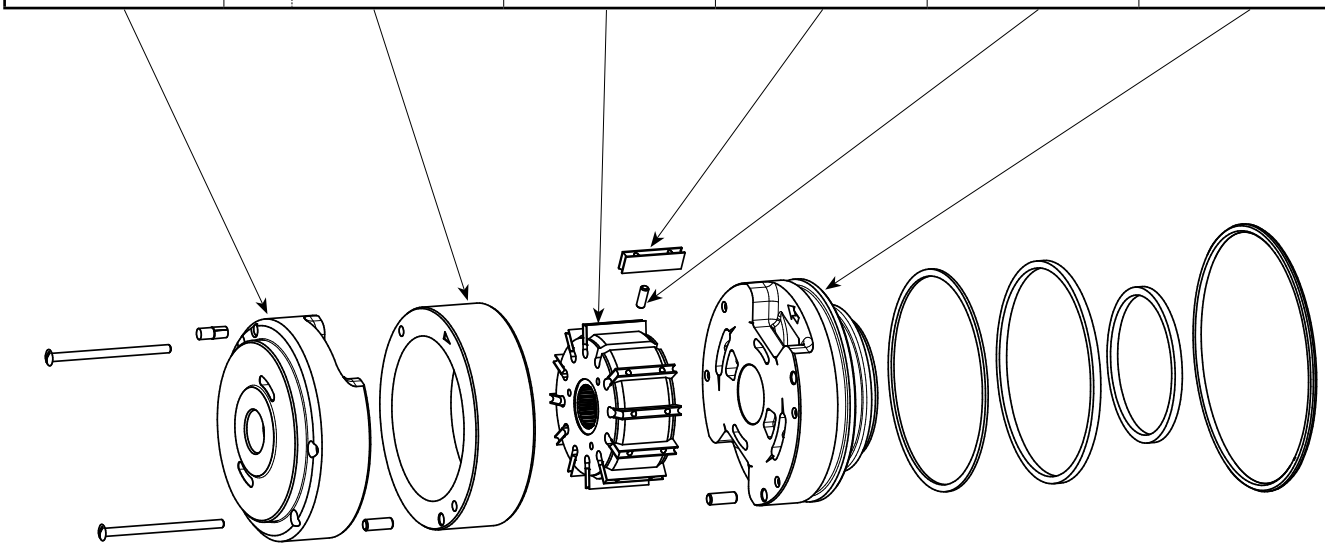

2 Seal kit

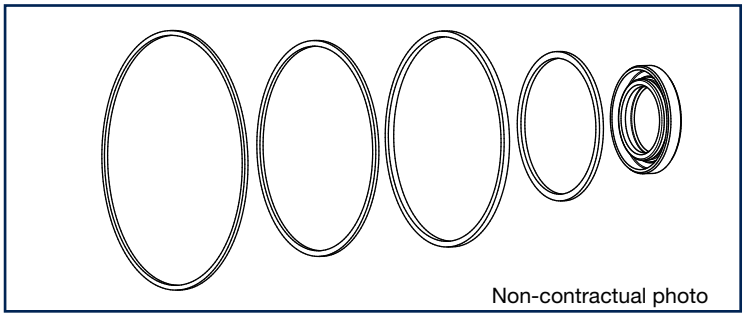
Non-contractual photo

Seal kit	Code N°
T7B - T7BS - *** - * * ** - * **1** - **	**S24-49112-0**
T7B - T7BS - *** - * * ** - * **4** - **	**S24-49112-4**
T7B - T7BS - *** - * * ** - * **5** - **	**S24-49112-5**

3 Shaft kit

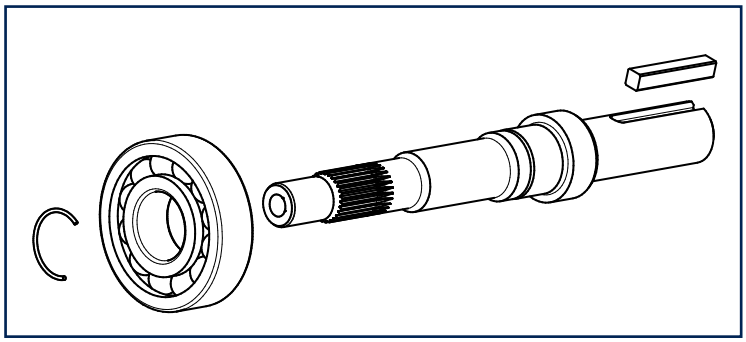

Shaft kit	Code N°
T7BS - *** - **1** * ** - * * - **	**S24-50140-0**
T7B - T7BS - *** - **2** * ** - * * - **	**S24-50142-0**
T7BS - *** - **3** * ** - * * - **	**S24-50141-0**
T7BS - *** - **4** * ** - * * - **	**S24-59295-0**

T7BS

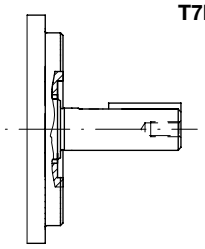
1 - Keyed SAE B

T7B - T7BS

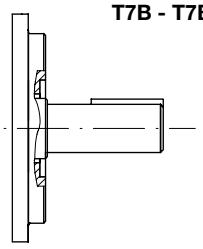
2 - Keyed ISO R775

T7BS

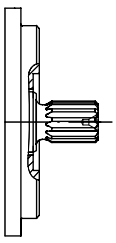
3 - Splined SAE B

T7BS

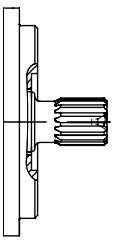
4 - Splined SAE BB

Parker Hannifin
Pump & Motor Division Europe
Vierzon - France

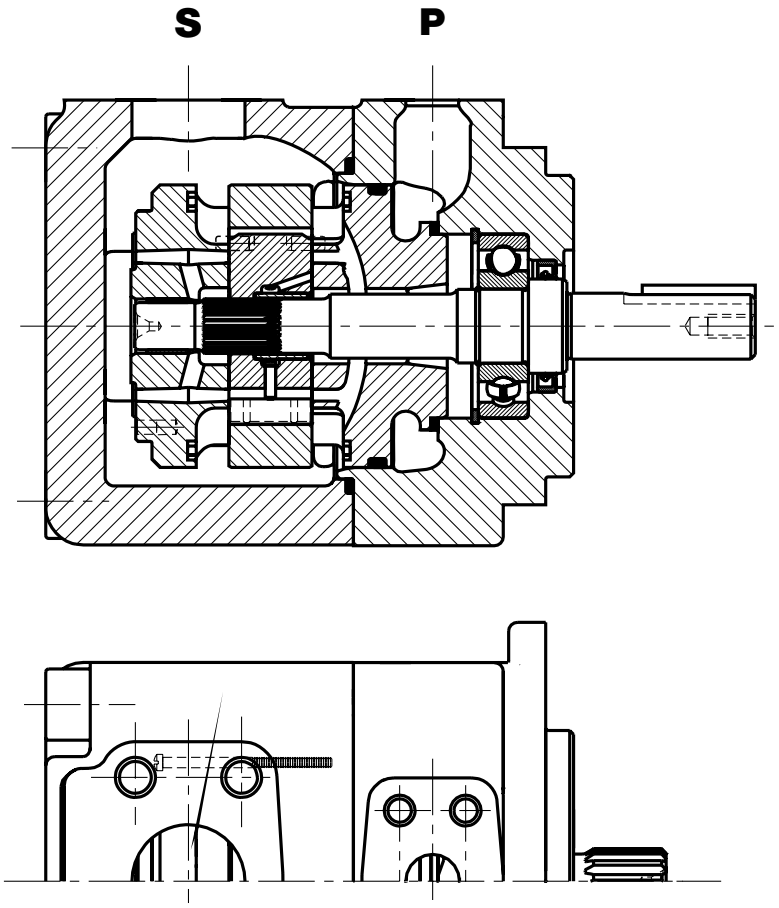

⚠ WARNING – USER RESPONSIBILITY

FAILURE OR IMPROPER SELECTION OR IMPROPER USE OF THE PRODUCTS DESCRIBED HEREIN OR RELATED ITEMS CAN CAUSE DEATH, PERSONAL INJURY AND PROPERTY DAMAGE.

This document and other information from Parker-Hannifin Corporation, its subsidiaries and authorized distributors provide product or system options for further investigation by users having technical expertise.

The user, through its own analysis and testing, is solely responsible for making the final selection of the system and components and assuring that all performance, endurance, maintenance, safety and warning requirements of the application are met. The user must analyze all aspects of the application, follow applicable industry standards, and follow the information concerning the product in the current product catalog and in any other materials provided from Parker or its subsidiaries or authorized distributors.

To the extent that Parker or its subsidiaries or authorized distributors provide component or system options based upon data or specifications provided by the user, the user is responsible for determining that such data and specifications are suitable and sufficient for all applications and reasonably foreseeable uses of the components or systems.

Offer of Sale

Please contact your Parker representation for a detailed ”Offer of Sale”.

Parker Worldwide

Europe, Middle East, Africa

AE – United Arab Emirates,
Dubai
Tel: +971 4 8127100
parker.me@parker.com

AT – Austria, St. Florian
Tel: +43 (0)7224 66201
parker.austria@parker.com

AZ – Azerbaijan, Baku
Tel: +994 50 2233 458
parker.azerbaijan@parker.com

BE/NL/LU – Benelux,
Hendrik Ido Ambacht
Tel: +31 (0)541 585 000
parker.nl@parker.com

BG – Bulgaria, Sofia
Tel: +359 2 980 1344
parker.bulgaria@parker.com

BY – Belarus, Minsk
Tel: +48 (0)22 573 24 00
parker.poland@parker.com

CH – Switzerland, Etoy
Tel: +41 (0)21 821 87 00
parker.switzerland@parker.com

CZ – Czech Republic, Klecany
Tel: +420 284 083 111
parker.czechrepublic@parker.com

DE – Germany, Kaarst
Tel: +49 (0)2131 4016 0
parker.germany@parker.com

DK – Denmark, Ballerup
Tel: +45 43 56 04 00
parker.denmark@parker.com

ES – Spain, Madrid
Tel: +34 902 330 001
parker.spain@parker.com

FI – Finland, Vantaa
Tel: +358 (0)20 753 2500
parker.finland@parker.com

FR – France, Contamine s/Arve
Tel: +33 (0)4 50 25 80 25
parker.france@parker.com

GR – Greece, Piraeus
Tel: +30 210 933 6450
parker.greece@parker.com

HU – Hungary, Budaörs
Tel: +36 23 885 470
parker.hungary@parker.com

IE – Ireland, Dublin
Tel: +353 (0)1 466 6370
parker.ireland@parker.com

IL – Israel
Tel: +39 02 45 19 21
parker.israel@parker.com

IT – Italy, Corsico (MI)
Tel: +39 02 45 19 21
parker.italy@parker.com

KZ – Kazakhstan, Almaty
Tel: +7 7273 561 000
parker.easteurope@parker.com

NO – Norway, Asker
Tel: +47 66 75 34 00
parker.norway@parker.com

PL – Poland, Warsaw
Tel: +48 (0)22 573 24 00
parker.poland@parker.com

PT – Portugal
Tel: +351 22 999 7360
parker.portugal@parker.com

RO – Romania, Bucharest
Tel: +40 21 252 1382
parker.romania@parker.com

RU – Russia, Moscow
Tel: +7 495 645-2156
parker.russia@parker.com

SE – Sweden, Borås
Tel: +46 (0)8 59 79 50 00
parker.sweden@parker.com

SK – Slovakia, Banská Bystrica
Tel: +421 484 162 252
parker.slovakia@parker.com

SL – Slovenia, Novo Mesto
Tel: +386 7 337 6650
parker.slovenia@parker.com

TR – Turkey, Istanbul
Tel: +90 216 4997081
parker.turkey@parker.com

UA – Ukraine, Kiev
Tel: +48 (0)22 573 24 00
parker.poland@parker.com

UK – United Kingdom, Warwick
Tel: +44 (0)1926 317 878
parker.uk@parker.com

ZA – South Africa, Kempton Park
Tel: +27 (0)11 961 0700
parker.southafrica@parker.com

North America

CA – Canada, Milton, Ontario
Tel: +1 905 693 3000

US – USA, Cleveland
Tel: +1 216 896 3000

Asia Pacific

AU – Australia, Castle Hill
Tel: +61 (0)2-9634 7777

CN – China, Shanghai
Tel: +86 21 2899 5000

HK – Hong Kong
Tel: +852 2428 8008

IN – India, Mumbai
Tel: +91 22 6513 7081-85

JP – Japan, Tokyo
Tel: +81 (0)3 6408 3901

KR – South Korea, Seoul
Tel: +82 2 559 0400

MY – Malaysia, Shah Alam
Tel: +60 3 7849 0800

NZ – New Zealand, Mt Wellington
Tel: +64 9 574 1744

SG – Singapore
Tel: +65 6887 6300

TH – Thailand, Bangkok
Tel: +662 186 7000

TW – Taiwan, Taipei
Tel: +886 2 2298 8987

South America

AR – Argentina, Buenos Aires
Tel: +54 3327 44 4129

BR – Brazil, Sao Jose dos Campos
Tel: +55 800 727 5374

CL – Chile, Santiago
Tel: +56 2 623 1216

MX – Mexico, Toluca
Tel: +52 72 2275 4200

European Product Information Centre
Free phone: 00 800 27 27 5374
(from AT, BE, CH, CZ, DE, DK, EE, ES, FI, FR, IE, IL, IS, IT, LU, MT, NL, NO, PL, PT, RU, SE, SK, UK, ZA)

© 2019 Parker Hannifin Corporation. All rights reserved.

Catalogue MSG29-0072-M1/UK, 03/2020

Parker Hannifin Ltd.
Tachbrook Park Drive
Tachbrook Park, Warwick CV34 6TU
United Kingdom
Tel.: +44 (0) 1926 317 878
Fax: +44 (0) 1926 317 855
www.parker.com

Your local authorized Parker distributor