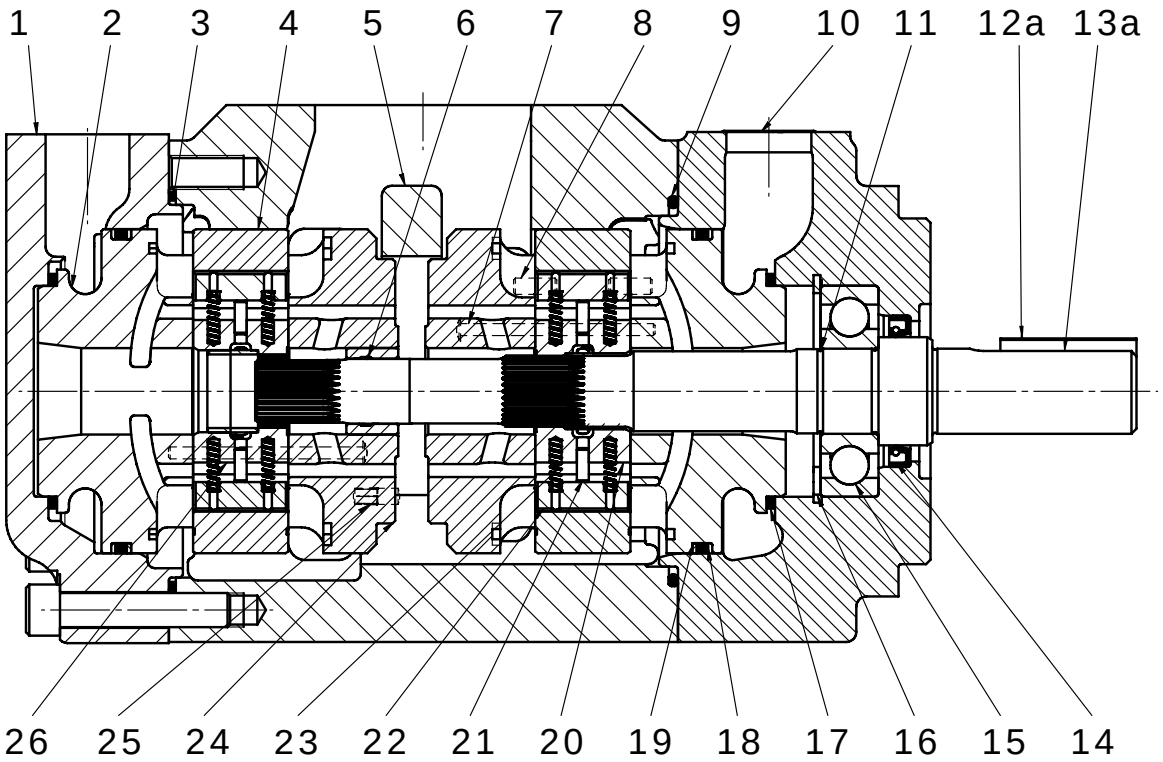

Hydraulic Pumps - Service Information
T7BB / T7BBS for variable speed drives

Denison Vane - Flügelzellen - Palettes - Palette - Paletas

Parker

ENGINEERING YOUR SUCCESS.

T7BB - T7BBS

	Item - Pos. - Réf. - Pos.	
	27	28
Mounting torque Anziehdrehmoment Couple de serrage Coppia di serragio Par de apriete	61 Nm 45 ft.lbs	187 Nm 138 ft.lbs

Recommended repair kits and assy's are bold printed
Empfohlene Austausch - Baugruppen sind fett gedruckt
Les pochettes de rechange recommandées sont imprimées en caractères gras
I kit di ricambio consigliati sono indicati in grassetto
Los juegos de reparacion recommendados y los conjuntos, estan en negrita

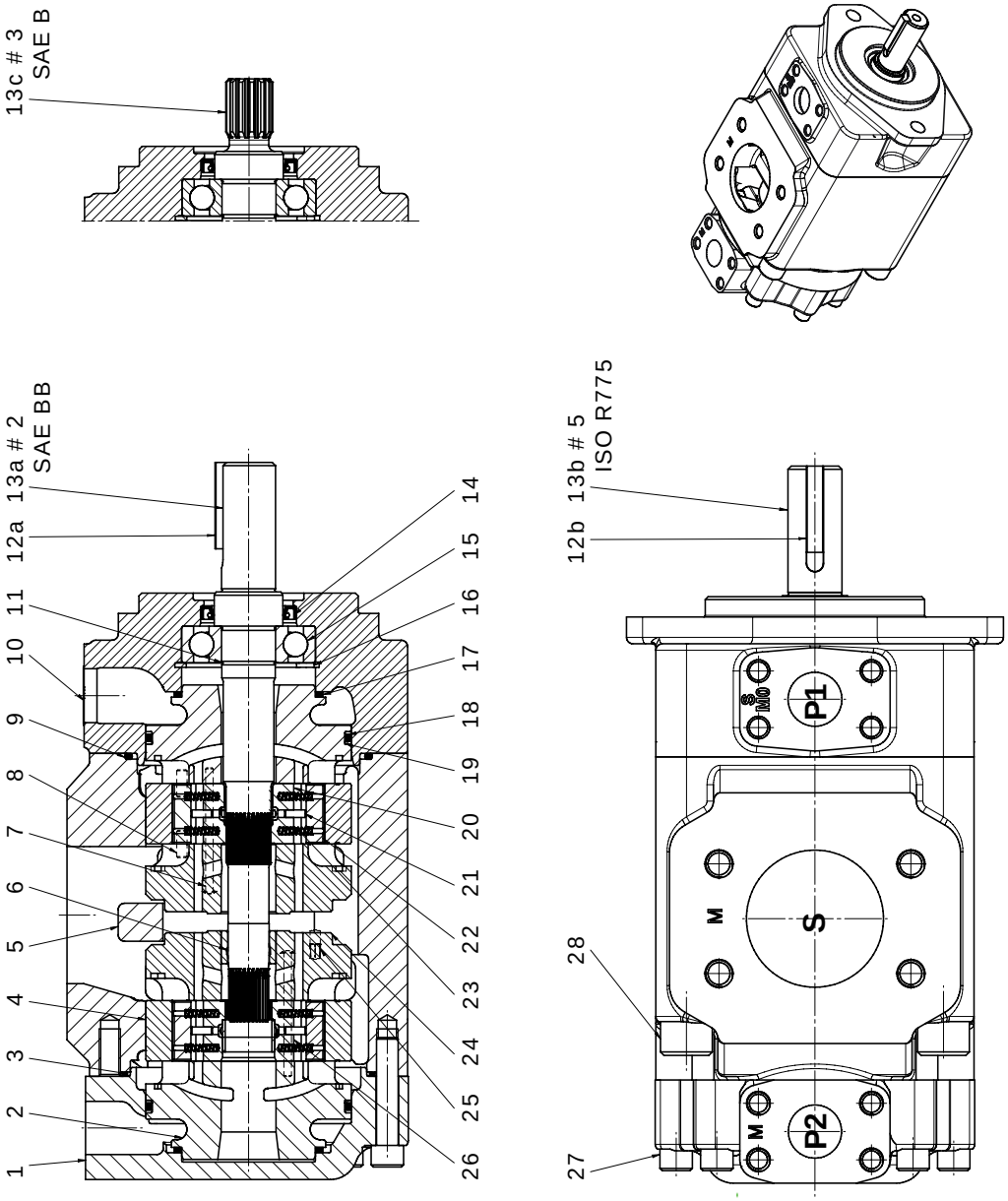

Parker Hannifin Manufacturing France SAS
VPDE, Denison Vane Pumps
Vierzon - France

Item Pos. Réf. Pos. Pos.	**Description** ***Descrizione***	**Benennung** ***Descripcion***	**Description**		Part N° Teil Nr. Code N° Cod. N° Referencia T7BB	Part N° Teil Nr. Code N° Cod. N° Referencia T7BBS	Qty Stück Qté Q.tà Cant.
1	End cap (UNC) *Coperchio (UNC)*	Deckel (UNC) *Tapa (UNC)*	Chapeau (UNC)			034-48579-0	1
	End cap (metric) *Coperchio (metrica)*	Deckel (metrisch) *Tapa (métrico)*	Chapeau (métrique)		034-71327-0		1
2	Port plate-pressure *Piatto distributore anter.*	Steuerplatte *Plato de presion*	Plaque pression	ABCD	034-66923-0		2
3	Sq. section seal *Guarnizione*	Dichtring *Junta seccion cuadrada*	Joint section carrée	BH	671-10156-0		1
4	Cam ring 003 *Anello camma 003*	Hubring 003 *Aro volumetrico 003*	Came 003	AB	034-66910-0		2
	Cam ring 004 *Anello camma 004*	Hubring 004 *Aro volumetrico 004*	Came 004	AB	034-66911-0		2
	Cam ring 005 *Anello camma 005*	Hubring 005 *Aro volumetrico 005*	Came 005	AB	034-66912-0		2
	Cam ring 006 *Anello camma 006*	Hubring 006 *Aro volumetrico 006*	Came 006	AB	034-66913-0		2
	Cam ring 007 *Anello camma 007*	Hubring 007 *Aro volumetrico 007*	Came 007	AB	034-67063-0		2
	Cam ring 008 *Anello camma 008*	Hubring 008 *Aro volumetrico 008*	Came 008	AB	034-66914-0		2
	Cam ring 009 *Anello camma 009*	Hubring 009 *Aro volumetrico 009*	Came 009	AB	034-67383-0		2
	Cam ring 010 *Anello camma 010*	Hubring 010 *Aro volumetrico 010*	Came 010	AB	034-66915-0		2
	Cam ring 011 *Anello camma 011*	Hubring 011 *Aro volumetrico 011*	Came 011	AB	034-67461-0		2
	Cam ring 012 *Anello camma 012*	Hubring 012 *Aro volumetrico 012*	Came 012	AB	034-67032-0		2
	Cam ring 014 *Anello camma 014*	Hubring 014 *Aro volumetrico 014*	Came 014	AB	034-67409-0		2
	Cam ring 015 *Anello camma 015*	Hubring 015 *Aro volumetrico 015*	Came 015	AB	034-67034-0		2
5	Housing UNC *Corpo UNC*	Gehäuse UNC *Cuerpo UNC*	Carter UNC			034-67071-0	1
	Housing metric *Corpo metrica*	Gehäuse metrisch *Cuerpo metrico*	Carter métrique		034-67072-0		1
6	Bush *Bussola*	Buchse *Cojinete de fricción*	Bague	D	034-59412-0		1
7	Screw *Vite*	Schraube *Tornillo*	Vis	AB	317-06266-0		4
8	Dowel pin *Spina*	Fixierstift *Pasador*	Goupille	AB	324-21208-0		4

Parker Hannifin Manufacturing France SAS
VPDE, Denison Vane Pumps
Vierzon - France

Item Pos. Réf. Pos. Pos.	**Description** ***Descrizione***	**Benennung** ***Descripcion***	**Description**		Part N° Teil Nr. Code N° Cod. N° Referencia T7BB	Part N° Teil Nr. Code N° Cod. N° Referencia T7BBS	Qty Stück Qté Q.tà Cant.
9	O.ring *Guarnizione torica*	Runddichtring *Anillo tórico*	Joint torique	AH	671-00244-0		1
10	Mounting cap 1" (UNC - 0W) *Coperchio 1" (UNC - 0W)*	Deckel 1" (UNC - 0W) *Tapa de montaje 1" (UNC - 0W)*	Chapeau de montage 1" (UNC - 0W)			034-66884-0	1
	Mounting cap 1" (metric MW) *Coperchio 1" (metrica MW)*	Deckel 1" (metrisch MW) *Tapa de montaje 1" (metrico MW)*	Chapeau de montage 1" (métrique MW)		034-66928-0	034-66883-0	1
11	Round section ring *Anello elastico*	Sicherungsring *Anillo tórico*	Anneau	EFG	034-70777-0		1
12a	Key (code 2) *Chiavetta (codice 2)*	Paßfeder (Typ 2) *Chaveta (codigo 2)*	Clavette (code 2)	E		034-48690-0	1
12b	Key (code 5) *Chiavetta (codice 5)*	Paßfeder (Typ 5) *Chaveta (codigo 5)*	Clavette (code 5)	G	211-00005-3		1
13a	Shaft (keyed) (SAE BB) (code 2) *Albero a chiavetta (SAE BB) (codice 2)*	Paßfederwelle (SAE BB) (Typ 2) *Eje chaveteado (SAE BB) (codigo 2)*	Arbre à clavette (SAE BB) (code 2)	E		034-66576-0	1
13b	Shaft (keyed) (code 5) *Albero a chiavetta (codice 5)*	Paßfederwelle (Typ 5) *Eje chaveteado (codigo 5)*	Arbre à clavette (code 5)	G	034-67083-0		1
13c	Shaft (splined) (SAE B) (code 3) *Albero scanalato (SAE B) (codice 3)*	Vielkeilwelle (SAE B) (Typ 3) *Eje estriado (SAE B) (codigo 3)*	Arbre à cannelures (SAE B) (code 3)	F		034-67080-0	1
14	Shaft seal (S1 - 0,7 bar) *Paraolio (S1 - 0,7 bar)*	Simmerring (S1 - 0,7 bar) *Retén eje (S1 - 0,7 bar)*	Joint d'arbre (S1 - 0,7 bar)	H	620-82046-0		1
	Shaft seal (S4 - 0,7 bar) *Paraolio (S4 - 0,7 bar)*	Simmerring (S4 - 0,7 bar) *Retén eje (S4 - 0,7 bar)*	Joint d'arbre (S4 - 0,7 bar)	H	620-82046-4		1
	Shaft seal (S5 - 0,7 bar) *Paraolio (S5 - 0,7 bar)*	Simmerring (S5 - 0,7 bar) *Retén eje (S5 - 0,7 bar)*	Joint d'arbre (S5 - 0,7 bar)	H	620-82046-5		1
15	Ball bearing *Cuscinetto a sfere*	Kugellager *Cojinete de bolas*	Roulement à billes	FG	230-82054-0		1
16	Retaining ring *Anello elastico*	Sicherungsring *Aro retencion*	Circlips		356-30244-0		1
17	Sq. section seal *Guarnizione*	Dichtring *Junta seccion cuadrada*	Joint section carrée	ABH	691-10229-0		2
18	Sq. section seal *Guarnizione*	Dichtring *Junta seccion cuadrada*	Joint section carrée	ABH	691-10238-0		2
19	Back-up ring *Anello anti-estrusione*	Stützring *Anillo*	Bague anti-extrusion	ABH	618-00010-3		2
20	Rotor insert assy *Insieme rotore*	Rotor *Conjunto rotor*	Rotor ass.	A	S54-47999-0		1
21	Pin-vane holdout *Pistoncino di sostentamento*	Stössel *Espiga empuje paleta*	Poussoir de palette	AB	034-66991-0		24
22	Vane *Paletta*	Flügel *Paleta*	Palette	AB	034-68303-0		24
23	Vane spring *Molla*	Feder für Flügel *Muelle paleta*	Ressort de palette	AB	034-67553-0		48

Item Pos. Réf. Pos. Pos.	Description *Descrizione*	Benennung *Descripcion*	Description		Part N° Teil Nr. Code N° Cod. N° Referencia T7BB	Part N° Teil Nr. Code N° Cod. N° Referencia T7BBS	Qty Stück Qté Q.tà Cant.
24	Port plate-rear *Piatto distributore post.*	Steuerplatte *Plato distribuidor trasero*	Plaque arrière	ABCD	034-66922-0		2
25	Dowel pin *Spina*	Fixierstift *Pasador*	Goupille	ABCD	323-82010-0		2
26	Rotor insert ass'y *Insieme rotore*	Rotor *Conjunto rotor*	Rotor ass.	B	S54-47998-0		1
27	Screw *Vite*	Schraube *Tornillo*	Vis		361-11264-3		7
28	Screw *Vite*	Schraube *Tornillo*	Vis		361-14434-3		4
	REPAIR KIT ***KIT DI RICAMBIO***	**AUSTAUSCH-BAUGRUPPEN** ***CONJUNTO REPARACION***	**POCHETTES RECHANGES**				
A	**Cart. and plate ass'y E03 C.W. (P1)** ***Ins. cart. E03 oraria (P1)***	**Pumpeneinheit E03 Rechtslauf (P1)** ***Conjunto cart. y platos E03 giro d. (P1)***	**Cart. et plaque ass. E03 rot. d. (P1)**		**S54-47949-***		**1**
A	**Cart. and plate ass'y E03 C.C.W. (P1)** ***Ins. cart. E03 antioraria (P1)***	**Pumpeneinheit E03 Linkslauf (P1)** ***Conjunto cart. y platos E03 giro i. (P1)***	**Cart. et plaque ass. E03 rot. g. (P1)**		**S54-47950-***		**1**
A	**Cart. and plate ass'y E04 C.W. (P1)** ***Ins. cart. E04 oraria (P1)***	**Pumpeneinheit E04 Rechtslauf (P1)** ***Conjunto cart. y platos E04 giro d. (P1)***	**Cart. et plaque ass. E04 rot. d. (P1)**		**S54-47951-***		**1**
A	**Cart. and plate ass'y E04 C.C.W. (P1)** ***Ins. cart. E04 antioraria (P1)***	**Pumpeneinheit E04 Linkslauf (P1)** ***Conjunto cart. y platos E04 giro i. (P1)***	**Cart. et plaque ass. E04 rot. g. (P1)**		**S54-47952-***		**1**
A	**Cart. and plate ass'y E05 C.W. (P1)** ***Ins. cart. E05 oraria (P1)***	**Pumpeneinheit E05 Rechtslauf (P1)** ***Conjunto cart. y platos E05 giro d. (P1)***	**Cart. et plaque ass. E05 rot. d. (P1)**		**S54-47953-***		**1**
A	**Cart. and plate ass'y E05 C.C.W. (P1)** ***Ins. cart. E05 antioraria (P1)***	**Pumpeneinheit E05 Linkslauf (P1)** ***Conjunto cart. y platos E05 giro i. (P1)***	**Cart. et plaque ass. E05 rot. g. (P1)**		**S54-47954-***		**1**
A	**Cart. and plate ass'y E06 C.W. (P1)** ***Ins. cart. E06 oraria (P1)***	**Pumpeneinheit E06 Rechtslauf (P1)** ***Conjunto cart. y platos E06 giro d. (P1)***	**Cart. et plaque ass. E06 rot. d. (P1)**		**S54-47955-***		**1**
A	**Cart. and plate ass'y E06 C.C.W. (P1)** ***Ins. cart. E06 antioraria (P1)***	**Pumpeneinheit E06 Linkslauf (P1)** ***Conjunto cart. y platos E06 giro i. (P1)***	**Cart. et plaque ass. E06 rot. g. (P1)**		**S54-47956-***		**1**
A	**Cart. and plate ass'y E07 C.W. (P1)** ***Ins. cart. E07 oraria (P1)***	**Pumpeneinheit E07 Rechtslauf (P1)** ***Conjunto cart. y platos E07 giro d. (P1)***	**Cart. et plaque ass. E07 rot. d. (P1)**		**S54-47957-***		**1**
A	**Cart. and plate ass'y E07 C.C.W. (P1)** ***Ins. cart. E07 antioraria (P1)***	**Pumpeneinheit E07 Linkslauf (P1)** ***Conjunto cart. y platos E07 giro i. (P1)***	**Cart. et plaque ass. E07 rot. g. (P1)**		**S54-47958-***		**1**
A	**Cart. and plate ass'y E08 C.W. (P1)** ***Ins. cart. E08 oraria (P1)***	**Pumpeneinheit E08 Rechtslauf (P1)** ***Conjunto cart. y platos E08 giro d. (P1)***	**Cart. et plaque ass. E08 rot. d. (P1)**		**S54-47959-***		**1**
A	**Cart. and plate ass'y E08 C.C.W. (P1)** ***Ins. cart. E08 antioraria (P1)***	**Pumpeneinheit E08 Linkslauf (P1)** ***Conjunto cart. y platos E08 giro i. (P1)***	**Cart. et plaque ass. E08 rot. g. (P1)**		**S54-47960-***		**1**
A	**Cart. and plate ass'y E09 C.W. (P1)** ***Ins. cart. E09 oraria (P1)***	**Pumpeneinheit E09 Rechtslauf (P1)** ***Conjunto cart. y platos E09 giro d. (P1)***	**Cart. et plaque ass. E09 rot. d. (P1)**		**S54-47961-***		**1**
A	**Cart. and plate ass'y E09 C.C.W. (P1)** ***Ins. cart. E09 antioraria (P1)***	**Pumpeneinheit E09 Linkslauf (P1)** ***Conjunto cart. y platos E09 giro i. (P1)***	**Cart. et plaque ass. E09 rot. g. (P1)**		**S54-47962-***		**1**
A	**Cart. and plate ass'y E10 C.W. (P1)** ***Ins. cart. E10 oraria (P1)***	**Pumpeneinheit E10 Rechtslauf (P1)** ***Conjunto cart. y platos E10 giro d. (P1)***	**Cart. et plaque ass. E10 rot. d. (P1)**		**S54-47963-***		**1**

Item Pos. Réf. Pos. Pos.	Description *Descrizione*	Benennung *Descripcion*	Description		Part N° Teil Nr. Code N° Cod. N° Referencia T7BB	Part N° Teil Nr. Code N° Cod. N° Referencia T7BBS	Qty Stück Qté Q.tà Cant.
A	Cart. and plate ass'y E10 C.C.W. (P1) *Ins. cart. E10 antioraria (P1)*	Pumpeneinheit E10 Linkslauf (P1) *Conjunto cart. y platos E10 giro i. (P1)*	Cart. et plaque ass. E10 rot. g. (P1)		S54-47964-*		1
A	Cart. and plate ass'y E11 C.W. (P1) *Ins. cart. E11 oraria (P1)*	Pumpeneinheit E11 Rechtslauf (P1) *Conjunto cart. y platos E11 giro d. (P1)*	Cart. et plaque ass. E11 rot. d. (P1)		S54-47965-*		1
A	Cart. and plate ass'y E11 C.C.W. (P1) *Ins. cart. E11 antioraria (P1)*	Pumpeneinheit E11 Linkslauf (P1) *Conjunto cart. y platos E11 giro i. (P1)*	Cart. et plaque ass. E11 rot. g. (P1)		S54-47966-*		1
A	Cart. and plate ass'y E12 C.W. (P1) *Ins. cart. E12 oraria (P1)*	Pumpeneinheit E12 Rechtslauf (P1) *Conjunto cart. y platos E12 giro d. (P1)*	Cart. et plaque ass. E12 rot. d. (P1)		S54-47967-*		1
A	Cart. and plate ass'y E12 C.C.W. (P1) *Ins. cart. E12 antioraria (P1)*	Pumpeneinheit E12 Linkslauf (P1) *Conjunto cart. y platos E12 giro i. (P1)*	Cart. et plaque ass. E12 rot. g. (P1)		S54-47968-*		1
A	Cart. and plate ass'y E14 C.W. (P1) *Ins. cart. E14 oraria (P1)*	Pumpeneinheit E14 Rechtslauf (P1) *Conjunto cart. y platos E14 giro d. (P1)*	Cart. et plaque ass. E14 rot. d. (P1)		S54-47969-*		1
A	Cart. and plate ass'y E14 C.C.W. (P1) *Ins. cart. E14 antioraria (P1)*	Pumpeneinheit E14 Linkslauf (P1) *Conjunto cart. y platos E14 giro i. (P1)*	Cart. et plaque ass. E14 rot. g. (P1)		S54-47970-*		1
A	Cart. and plate ass'y E15 C.W. (P1) *Ins. cart. E15 oraria (P1)*	Pumpeneinheit E15 Rechtslauf (P1) *Conjunto cart. y platos E15 giro d. (P1)*	Cart. et plaque ass. E15 rot. d. (P1)		S54-47971-*		1
A	Cart. and plate ass'y E15 C.C.W. (P1) *Ins. cart. E15 antioraria (P1)*	Pumpeneinheit E15 Linkslauf (P1) *Conjunto cart. y platos E15 giro i. (P1)*	Cart. et plaque ass. E15 rot. g. (P1)		S54-47972-*		1
B	Cart. and plate ass'y E03 C.W. (P2) *Ins. cart. E03 oraria (P2)*	Pumpeneinheit E03 Rechtslauf (P2) *Conjunto cart. y platos E03 giro d. (P2)*	Cart. et plaque ass. E03 rot. d. (P2)		S54-47973-*		1
B	Cart. and plate ass'y E03 C.C.W. (P2) *Ins. cart. E03 antioraria (P2)*	Pumpeneinheit E03 Linkslauf (P2) *Conjunto cart. y platos E03 giro i. (P2)*	Cart. et plaque ass. E03 rot. g. (P2)		S54-47974-*		1
B	Cart. and plate ass'y E04 C.W. (P2) *Ins. cart. E04 oraria (P2)*	Pumpeneinheit E04 Rechtslauf (P2) *Conjunto cart. y platos E04 giro d. (P2)*	Cart. et plaque ass. E04 rot. d. (P2)		S54-47975-*		1
B	Cart. and plate ass'y E04 C.C.W. (P2) *Ins. cart. E04 antioraria (P2)*	Pumpeneinheit E04 Linkslauf (P2) *Conjunto cart. y platos E04 giro i. (P2)*	Cart. et plaque ass. E04 rot. g. (P2)		S54-47976-*		1
B	Cart. and plate ass'y E05 C.W. (P2) *Ins. cart. E05 oraria (P2)*	Pumpeneinheit E05 Rechtslauf (P2) *Conjunto cart. y platos E05 giro d. (P2)*	Cart. et plaque ass. E05 rot. d. (P2)		S54-47977-*		1
B	Cart. and plate ass'y E05 C.C.W. (P2) *Ins. cart. E05 antioraria (P2)*	Pumpeneinheit E05 Linkslauf (P2) *Conjunto cart. y platos E05 giro i. (P2)*	Cart. et plaque ass. E05 rot. g. (P2)		S54-47978-*		1
B	Cart. and plate ass'y E06 C.W. (P2) *Ins. cart. E06 oraria (P2)*	Pumpeneinheit E06 Rechtslauf (P2) *Conjunto cart. y platos E06 giro d. (P2)*	Cart. et plaque ass. E06 rot. d. (P2)		S54-47979-*		1
B	Cart. and plate ass'y E06 C.C.W. (P2) *Ins. cart. E06 antioraria (P2)*	Pumpeneinheit E06 Linkslauf (P2) *Conjunto cart. y platos E06 giro i. (P2)*	Cart. et plaque ass. E06 rot. g. (P2)		S54-47980-*		1
B	Cart. and plate ass'y E07 C.W. (P2) *Ins. cart. E07 oraria (P2)*	Pumpeneinheit E07 Rechtslauf (P2) *Conjunto cart. y platos E07 giro d. (P2)*	Cart. et plaque ass. E07 rot. d. (P2)		S54-47981-*		1
B	Cart. and plate ass'y E07 C.C.W. (P2) *Ins. cart. E07 antioraria (P2)*	Pumpeneinheit E07 Linkslauf (P2) *Conjunto cart. y platos E07 giro i. (P2)*	Cart. et plaque ass. E07 rot. g. (P2)		S54-47982-*		1
B	Cart. and plate ass'y E08 C.W. (P2) *Ins. cart. E08 oraria (P2)*	Pumpeneinheit E08 Rechtslauf (P2) *Conjunto cart. y platos E08 giro d. (P2)*	Cart. et plaque ass. E08 rot. d. (P2)		S54-47983-*		1
B	Cart. and plate ass'y E08 C.C.W. (P2) *Ins. cart. E08 antioraria (P2)*	Pumpeneinheit E08 Linkslauf (P2) *Conjunto cart. y platos E08 giro i. (P2)*	Cart. et plaque ass. E08 rot. g. (P2)		S54-47984-*		1
B	Cart. and plate ass'y E09 C.W. (P2) *Ins. cart. E09 oraria (P2)*	Pumpeneinheit E09 Rechtslauf (P2) *Conjunto cart. y platos E09 giro d. (P2)*	Cart. et plaque ass. E09 rot. d. (P2)		S54-47985-*		1

Item Pos. Réf. Pos. Pos.	Description *Descrizione*	Benennung *Descripcion*	Description		Part N° Teil Nr. Code N° Cod. N° Referencia T7BB	Part N° Teil Nr. Code N° Cod. N° Referencia T7BBS	Qty Stück Qté Q.tà Cant.
B	Cart. and plate ass'y E09 C.C.W. (P2) *Ins. cart. E09 antioraria (P2)*	Pumpeneinheit E09 Linkslauf (P2) *Conjunto cart. y platos E09 giro i. (P2)*	Cart. et plaque ass. E09 rot. g. (P2)		S54-47986-*		1
B	Cart. and plate ass'y E10 C.W. (P2) *Ins. cart. E10 oraria (P2)*	Pumpeneinheit E10 Rechtslauf (P2) *Conjunto cart. y platos E10 giro d. (P2)*	Cart. et plaque ass. E10 rot. d. (P2)		S54-47987-*		1
B	Cart. and plate ass'y E10 C.C.W. (P2) *Ins. cart. E10 antioraria (P2)*	Pumpeneinheit E10 Linkslauf (P2) *Conjunto cart. y platos E10 giro i.*	Cart. et plaque ass. E10 rot. g. (P2)		S54-47988-*		1
B	Cart. and plate ass'y E11 C.W. (P2) *Ins. cart. E11 oraria (P2)*	Pumpeneinheit E11 Rechtslauf (P2) *Conjunto cart. y platos E11 giro d. (P2)*	Cart. et plaque ass. E11 rot. d. (P2)		S54-47989-*		1
B	Cart. and plate ass'y E11 C.C.W. (P2) *Ins. cart. E11 antioraria (P2)*	Pumpeneinheit E11 Linkslauf (P2) *Conjunto cart. y platos E11 giro i. (P2)*	Cart. et plaque ass. E11 rot. g. (P2)		S54-47990-*		1
B	Cart. and plate ass'y E12 C.W. (P2) *Ins. cart. E12 oraria (P2)*	Pumpeneinheit E12 Rechtslauf (P2) *Conjunto cart. y platos E12 giro d. (P2)*	Cart. et plaque ass. B12 rot. d. (P2)		S54-47991-*		1
B	Cart. and plate ass'y E12 C.C.W. (P2) *Ins. cart. E12 antioraria (P2)*	Pumpeneinheit E12 Linkslauf (P2) *Conjunto cart. y platos E12 giro i.*	Cart. et plaque ass. E12 rot. g. (P2)		S54-47992-*		1
B	Cart. and plate ass'y E14 C.W. (P2) *Ins. cart. E14 oraria (P2)*	Pumpeneinheit E14 Rechtslauf (P2) *Conjunto cart. y platos E14 giro d. (P2)*	Cart. et plaque ass. E14 rot. d. (P2)		S54-47993-*		1
B	Cart. and plate ass'y E14 C.C.W. (P2) *Ins. cart. E14 antioraria (P2)*	Pumpeneinheit E14 Linkslauf (P2) *Conjunto cart. y platos E14 giro i. (P2)*	Cart. et plaque ass. E14 rot. g. (P2)		S54-47994-*		1
B	Cart. and plate ass'y E15 C.W. (P2) *Ins. cart. E15 oraria (P2)*	Pumpeneinheit E15 Rechtslauf (P2) *Conjunto cart. y platos E15 giro d. (P2)*	Cart. et plaque ass. E15 rot. d. (P2)		S54-47995-*		1
B	Cart. and plate ass'y E15 C.C.W. (P2) *Ins. cart. E15 antioraria (P2)*	Pumpeneinheit E15 Linkslauf (P2) *Conjunto cart. y platos E15 giro i.*	Cart. et plaque ass. E15 rot. g. (P2)		S54-47996-*		1
C	Port plate-rear ass'y (Birotational) P1 *Ins. piatto distributore post. (bidirezionale) P1*	Steuerplatte (Beide Drehrichtungen) P1 *Conjunto plato dist. trasero (Bidireccional) P1*	Plaque arrière ass. (Birotationelle) P1		S24-58196-*		1
D	Port plate-rear ass'y (Birotational) P2 *Ins. piatto distributore post. (bidirezionale) P2*	Steuerplatte (Beide Drehrichtungen) P2 *Conjunto plato dist. trasero (Bidireccional) P2*	Plaque arrière ass. (Birotationelle) P2		S24-50642-*		1
E	Shaft and bearing ass'y (code 2) *Ins. albero (codice 2)*	Baugruppe (Welle u. Lager) (Typ 2) *Conjunto eje cojinete (codigo 2)*	Arbre et roulement ass. (code 2)			S24-26208-*	1
F	Shaft and bearing ass'y (code 3) *Ins. albero (codice 3)*	Baugruppe (Welle u. Lager) (Typ 3) *Conjunto eje cojinete (codigo 3)*	Arbre et roulement ass. (code 3)			S24-63464-*	1
G	Shaft and bearing ass'y (code 5) *Ins. albero (codice 5)*	Baugruppe (Welle u. Lager) (Typ 5) *Conjunto eje cojinete (codigo 5)*	Arbre et roulement ass. (code 5)		S24-63466-*		1
H	Seal kit (S1 - 0,7 bar) *Serie guarnizioni (S1 - 0,7 bar)*	Dichtringsatz (S1 - 0,7 bar) *Juego de juntas (S1 - 0,7 bar)*	Pochette de joints (S1 - 0,7 bar)		S14-97724-0		1
	Seal kit (S4 - 0,7 bar) *Serie guarnizioni (S4 - 0,7 bar)*	Dichtringsatz (S4 - 0,7 bar) *Juego de juntas (S4 - 0,7 bar)*	Pochette de joints (S4 - 0,7 bar)		S14-97724-4		1
	Seal kit (S5 - 0,7 bar) *Serie guarnizioni (S5 - 0,7 bar)*	Dichtringsatz (S5 - 0,7 bar) *Juego de juntas (S5 - 0,7 bar)*	Pochette de joints (S5 - 0,7 bar)		S14-97724-5		1
	Seal class *Tipo di guarnizioni*	Dichtringsatz *Clase de juntas*	Classe de joint		S**_*****_* =		
					S1 BUNA N S**_*****-0 S4 EPDM S**_*****-4 S5 VITON® S**_*****-5		

Parker Hannifin Manufacturing France SAS
VPDE, Denison Vane Pumps
Vierzon - France

Model Code

Typenschlüssel

Designation - type

Model number :	Typenbezeichnung :	Numéro du modèle :	T7BB or T7BBS	.	-	E10	-	E10	-	2	R	00	-	A	1	MW	-	NOP	-	###

Series T7BB
ISO 2 bolts 3019-2 - 100A2HW
Series T7BBS
SAE B 2 bolts Mounting flange J744c

Baureihe T7BB
2-Loch-Flansch 100A2HW - ISO 3019-2
Baureihe T7BBS
2-Loch-Flansch nach SAE B, J744c

Série T7BB
Bride 2 trous ISO 3019-2 - 100A2HW
Série T7BBS
Bride 2 trous SAE B, J744c

One letter can be added to specify special parts in series

Optionen

Une lettre peut être ajoutée pour spécifier les pièces spéciales dans la série.

Cam ring
(Volumetric displacement) (ml/rev)
E03 = 9,8 E09 = 28,0
E04 = 12,8 E10 = 31,8
E05 = 15,9 E11 = 35,0
E06 = 19,8 E12 = 41,0
E07 = 22,5 E14 = 45,0
E08 = 24,9 E15 = 50,0

geom. Fördervolumen (Flügelzellenpumpe)
(Geometrisches Fördervolumen) (cm^3/U)

Came
(Cylindrée théorique) (cm^3/tr)

Type of shaft - T7BB
5 =keyed (ISO R775)

Art der Welle - T7BB
5 = Paßfederwelle (ISO R775)

Type d'arbre - T7BB
5 = à clavette (ISO R775)

Type of shaft - T7BBS
2 = keyed (SAE BB)
3 = splined (SAE B)

Art der Welle - T7BBS
2 = Paßfederwelle (SAE BB)
3 = Vielkeilwelle (SAE B)

Type d'arbre - T7BBS
2 = à clavette (SAE BB)
3 = à cannelures (SAE B)

Direction of rotation
R = Clockwise
L = Counter-clockwise

Drehrichtung
R = Rechtslauf
L = Linkslauf

Sens de rotation
R = à droite
L = à gauche

Porting combination
00 = standard

Lage der Anschlüsse
00 = standard

Combinaison des orifices
00 = standard

Design letter

Ausführungsbuchstabe

Conception

Seal class
1 = S1 - BUNA N
4 = S4 - EPDM
5 = S5 - VITON®

Dichtungsklasse
1 = S1 - BUNA N
4 = S4 - EPDM
5 = S5 - VITON®

Classe de joint
1 = S1 - BUNA N
4 = S4 - EPDM
5 = S5 - VITON®

Mounting w/connection variables
T7BB - S = 2.1/2" P1 = 1" P2 = 1"
MW = 4 bolts SAE flanges (J518c) - Metric threads

Gehäuse-Anschlußgröße
T7BB - S = 2.1/2" P1 = 1" P2 = 1"
MW = SAE 4-Loch-Flansch (J518c) - Metrisches Gewinde

Option sur orifices
T7BB - S = 2.1/2" P1 = 1" P2 = 1"
MW = Bride 4 trous SAE (J518c) - Taraudages métriques

T7BBS - S = 2.1/2" P1 = 1" P2 = 1"
0W = 4 bolts SAE flanges (J518c) - UNC threads
MW = 4 bolts SAE flanges (J518c) - Metric threads

T7BBS - S = 2.1/2" P1 = 1" P2 = 1"
0W = SAE 4-Loch-Flansch (J518c) - UNC Gewinde
MW = SAE 4-Loch-Flansch (J518c) - Metrisches Gewinde

T7BBS - S = 2.1/2" P1 = 1" P2 = 1"
0W = Bride 4 trous SAE (J518c) - Taraudages UNC
MW = Bride 4 trous SAE (J518c) - Taraudages métriques

Options
NOP = Not painted

Optionen
NOP = Unlackiert

Options
NOP = Sans peinture

Modifications

Modifikationen

Modifications

Designazione — Clave de designación

Sigla : — **Referencia modelo :**

T7BB or T7BBS . - E10 - E10 - 2 R 00 - A 1 MW - NOP - ***

Serie T7BB
2 fori ISO 3019-2 - 100A2HW
Serie T7BBS
SAE B - 2 fori flangia di montaggio SAE J744c

Serie T7BB
2 taladros ISO 3019-2 - 100A2HW
Serie T7BBS
SAE B - 2 taladros - Brida de montaje J744c

Una lettera può essere aggiunta per specificare parti speciali nella serie

Una letra puede ser añadide pasa especificar piezas especiales en la serie

Tipo di cartuccia
(Cylindrata) (ml/giro)
E03 = 9,8 E09 = 28,0
E04 = 12,8 E10 = 31,8
E05 = 15,9 E11 = 35,0
E06 = 19,8 E12 = 41,0
E07 = 22,5 E14 = 45,0
E08 = 24,9 E15 = 50,0

Aro volumetrico
(Cilindrada) (ml/rev)

Tipo di albero - T7BB
5 = a chiavetta (ISO R 775)

Tipo de eje - T7BB
5 = chaveteado (ISO R775)

Tipo di albero - T7BBS
2 = a chiavetta (SAE BB)
3 = scanalato (SAE B)

Tipo de eje - T7BBS
2 = chaveteado (SAE BB)
3 = estriado (SAE B)

Senso di rotazione
R = Orario
L = Antiorario

Sentido de giro
R = Derecha
L = Izquierda

Orientamento delle bocche
00 = standard

Posición de bocas
00 = estándar

Disegno

Letra de diseño

Tipo di guarnizioni
1 = S1 - BUNA N
4 = S4 - EPDM
5 = S5 - VITON®

Clase de juntas
1 = S1 - BUNA N
4 = S4 - EPDM
5 = S5 - VITON®

Dimensioni delle bocche
T7BB - S = 2.1/2" P1 = 1" P2 = 1"
MW = Flangia SAE 4 drenaggio (J518c) - Filetattura metrica

T7BBS - S = 2.1/2" P1 = 1" P2 = 1"
0W = Flangia SAE 4 drenaggio (J518c) - Filetattura UNC
MW = Flangia SAE 4 drenaggio (J518c) - Filetattura metrica

Opciones de las bocas
T7BB - S = 2.1/2" P1 = 1" P2 = 1"
MW = Brida SAE 4 taladros (J518c) - Rosca metrico

T7BBS - S = 2.1/2" P1 = 1" P2 = 1"
0W = Brida SAE 4 taladros (J518c)- Rosca UNC
MW = Brida SAE 4 taladros (J518c) - Rosca metrico

Opzioni
NOP = Senza vernice

Opciones
NOP = Sin pintura

Modifiche

Modificaciones

Parker Hannifin Manufacturing France SAS
VPDE, Denison Vane Pumps
Vierzon - France

WARNING — USER RESPONSIBILITY

FAILURE OR IMPROPER SELECTION OR IMPROPER USE OF THE PRODUCTS DESCRIBED HEREIN OR RELATED ITEMS CAN CAUSE DEATH, PERSONAL INJURY AND PROPERTY DAMAGE.

- This document and other information from Parker-Hannifin Corporation, its subsidiaries and authorized distributors provide product or system options for further investigation by users having technical expertise.

- The user, through its own analysis and testing, is solely responsible for making the final selection of the system and components and assuring that all performance, endurance, maintenance, safety and warning requirements of the application are met. The user must analyze all aspects of the application, follow applicable industry standards, and follow the information concerning the product in the current product catalog and in any other materials provided from Parker or its subsidiaries or authorized distributors.

- To the extent that Parker or its subsidiaries or authorized distributors provide component or system options based upon data or specifications provided by the user, the user is responsible for determining that such data and specifications are suitable and sufficient for all applications and reasonably foreseeable uses of the components or systems.

Offer of Sale

Please contact your Parker representation for a detailed ”Offer of Sale”.

Parker Hannifin Manufacturing France SAS
VPDE, Denison Vane Pumps
Vierzon - France

Parker Worldwide

Europe, Middle East, Africa

AE – United Arab Emirates,
Dubai
Tel: +971 4 8127100
parker.me@parker.com

AT – Austria, Wiener Neustadt
Tel: +43 (0)2622 23501-0
parker.austria@parker.com

AT – Eastern Europe, Wiener Neustadt
Tel: +43 (0)2622 23501 900
parker.easteurope@parker.com

AZ – Azerbaijan, Baku
Tel: +994 50 22 33 458
parker.azerbaijan@parker.com

BE/LU – Belgium, Nivelles
Tel: +32 (0)67 280 900
parker.belgium@parker.com

BG – Bulgaria, Sofia
Tel: +359 2 980 1344
parker.bulgaria@parker.com

BY – Belarus, Minsk
Tel: +48 (0)22 573 24 00
parker.poland@parker.com

CH – Switzerland, Etoy
Tel: +41 (0)21 821 87 00
parker.switzerland@parker.com

CZ – Czech Republic, Klecany
Tel: +420 284 083 111
parker.czechrepublic@parker.com

DE – Germany, Kaarst
Tel: +49 (0)2131 4016 0
parker.germany@parker.com

DK – Denmark, Ballerup
Tel: +45 43 56 04 00
parker.denmark@parker.com

ES – Spain, Madrid
Tel: +34 902 330 001
parker.spain@parker.com

FI – Finland, Vantaa
Tel: +358 (0)20 753 2500
parker.finland@parker.com

FR – France, Contamine s/Arve
Tel: +33 (0)4 50 25 80 25
parker.france@parker.com

GR – Greece, Athens
Tel: +30 210 933 6450
parker.greece@parker.com

HU – Hungary, Budaoers
Tel: +36 23 885 470
parker.hungary@parker.com

IE – Ireland, Dublin
Tel: +353 (0)1 466 6370
parker.ireland@parker.com

IT – Italy, Corsico (MI)
Tel: +39 02 45 19 21
parker.italy@parker.com

KZ – Kazakhstan, Almaty
Tel: +7 7273 561 000
parker.easteurope@parker.com

NL – The Netherlands, Oldenzaal
Tel: +31 (0)541 585 000
parker.nl@parker.com

NO – Norway, Asker
Tel: +47 66 75 34 00
parker.norway@parker.com

PL – Poland, Warsaw
Tel: +48 (0)22 573 24 00
parker.poland@parker.com

PT – Portugal
Tel: +351 22 999 7360
parker.portugal@parker.com

RO – Romania, Bucharest
Tel: +40 21 252 1382
parker.romania@parker.com

RU – Russia, Moscow
Tel: +7 495 645-2156
parker.russia@parker.com

SE – Sweden, Spånga
Tel: +46 (0)8 59 79 50 00
parker.sweden@parker.com

SK – Slovakia, Banská Bystrica
Tel: +421 484 162 252
parker.slovakia@parker.com

SL – Slovenia, Novo Mesto
Tel: +386 7 337 6650
parker.slovenia@parker.com

TR – Turkey, Istanbul
Tel: +90 216 4997081
parker.turkey@parker.com

UA – Ukraine, Kiev
Tel: +48 (0)22 573 24 00
parker.poland@parker.com

UK – United Kingdom, Warwick
Tel: +44 (0)1926 317 878
parker.uk@parker.com

ZA – South Africa, Kempton Park
Tel: +27 (0)11 961 0700
parker.southafrica@parker.com

North America

CA – Canada, Milton, Ontario
Tel: +1 905 693 3000

US – USA, Cleveland (industrial)
Tel: +1 216 896 3000

US – USA, Elk Grove Village (mobile)
Tel: +1 847 258 6200

Asia Pacific

AU – Australia, Castle Hill
Tel: +61 (0)2-9634 7777

CN – China, Shanghai
Tel: +86 21 2899 5000

HK – Hong Kong
Tel: +852 2428 8008

ID – Indonesia, Tangerang
Tel: +62 21 7588 1906

IN – India, Mumbai
Tel: +91 22 6513 7081-85

JP – Japan, Fujisawa
Tel: +81 (0)4 6635 3050

KR – South Korea, Seoul
Tel: +82 2 559 0400

MY – Malaysia, Shah Alam
Tel: +60 3 7849 0800

NZ – New Zealand, Mt Wellington
Tel: +64 9 574 1744

SG – Singapore
Tel: +65 6887 6300

TH – Thailand, Bangkok
Tel: +662 186 7000

TW – Taiwan, New Taipei City
Tel: +886 2 2298 8987

VN – Vietnam, Ho Chi Minh City
Tel: +84 8 3999 1600

South America

AR – Argentina, Buenos Aires
Tel: +54 3327 44 4129

BR – Brazil, Cachoeirinha RS
Tel: +55 51 3470 9144

CL – Chile, Santiago
Tel: +56 2 623 1216

MX – Mexico, Toluca
Tel: +52 72 2275 4200

Ed. 2016-04-04

© 2017 Parker Hannifin Corporation. All rights reserved.

Catalogue HY29-0123-M1/EU, 06/2017

EMEA Product Information Centre
Free phone: 00 800 27 27 5374
(from AT, BE, CH, CZ, DE, DK, EE, ES, FI, FR, IE, IL, IS, IT, LU, MT, NL, NO, PL, PT, RU, SE, SK, UK, ZA)

US Product Information Centre
Toll-free number: 1-800-27 27 537

www.parker.com

Your local authorized Parker distributor