SAUER SUNDSTRAND

Series 90

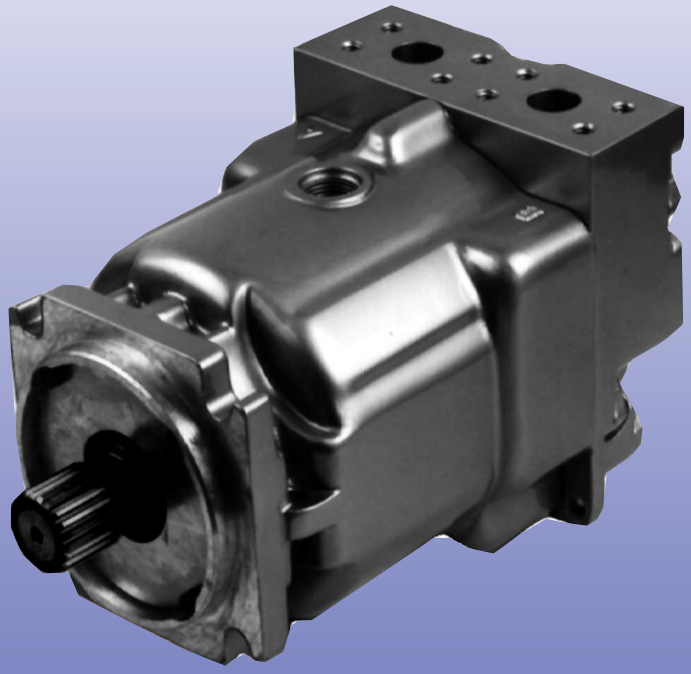

Axial Piston Motors Technical Information

General Description

Series 90 axial piston fixed and variable displacement motors are of swashplate design with fixed or variable displacement, and are intended for closed circuit applications.

The output speed is proportional to the flow rate of the input fluid, and is inversely proportional to the motor displacement.

The output torque is proportional to the pressure difference between the high and low pressure sides of the fluid circuit, and the motor displacement.

The direction of rotation of the motor output shaft depends upon which port the fluid enters the motor.

- **The Series 90 - Advanced Technology Today**
- **SAE Flange and Cartridge Motors**
- **6 Sizes of Fixed Displacement Motors**
- **2 Sizes of Variable Displacement Motors**
- **Electric and Hydraulic Controls for Variable Motors**
- **Proven Reliability and Performance**
- **Optimum Product Configurations**
- **Compact and Lightweight**

Copyright 1987, 1988, 1989, 1990, 1995, SAUER-SUNDSTRAND COMPANY
All rights reserved. Contents subject to change.
Printed in U.S.A. 0695 H

Technical Features

A Complete Family to Meet Market Needs

- Six (6) Different Sizes of Fixed Motors - 30 cm^3 (1.83 in^3) to 130 cm^3 (7.93 in^3)
- Two (2) Different Sizes of Variable Motors - 55 cm^3 (3.35 in^3) and 75 cm^3 (4.57 in^3)
- Cartridge Motors Compatible with CW and CT Planetary Wheel Drives
- Wide Range of Installation Options
- Variable Motor Control System Flexibility - Hydraulic and Electrical Controls
- Closed Circuit Installations

The Latest Technology

- Unique Product Features
- High Power Density
- Designed to Lower Installation Costs
- Design Provides for Reduced Operating Costs

High Performance

- Speeds to 5000 min^{-1} (rpm)
- Pressure to 480 bar (6960 psi)
- High Overall Efficiency
- Low Noise Levels

Reliability

- Designed to Rigorous Standards, and Proven in Laboratory and Field
- Manufactured to Rigid Quality Standards
- Long Service Life
- Output Shaft Bearings provide for Large External Shaft Loads

World Product

- Designed for Worldwide Markets
- Identical Product Manufactured Worldwide
- Mobile, Industrial, and Stationary Markets

Worldwide Support

- Sales and Technical Support in All Industrialized Countries of the World
- Serviced by a Worldwide Network of Authorized Service Centers

Contents

Description

General Description 2
Technical Features 3
System Circuit Description 5
Type Designation and Order Code • Fixed Displacement Motors 6
Type Designation and Order Code • Variable Displacement Motors 7
Sectional Views 8
Technical Specifications - Fixed and Variable Displacement Motors 9
Circuit Diagram and Nomenclature 9
Technical Data 10
Determination of Nominal Motor Size 10

General Technical Specifications

Speed Range 11
System Pressure Range 11
Case Pressure 11
Hydraulic Fluids 11
Temperature Limits 11
Filtration 11
Loop Flushing 12
Charge Pressure 12
Bypass Function 13
Overpressure Protection 13
Charge Flow Requirements 13

Options

Shaft Options 14

External Load Limits

Shaft Load Limits, Bearing Life 15

Efficiency Graphs

Efficiency Graphs 16

Dimensions

Fixed Displacement Motor - Frame Size 055 18
Fixed Displacement Motor - Frame Size 075 20
Fixed Displacement Motor - Frame Size 100 22
Fixed Displacement Motor - Frame Size 130 24

System Circuit Description

Working loop (low pressure)
Case drain fluid
Working loop (high pressure)
Control fluid
Suction line

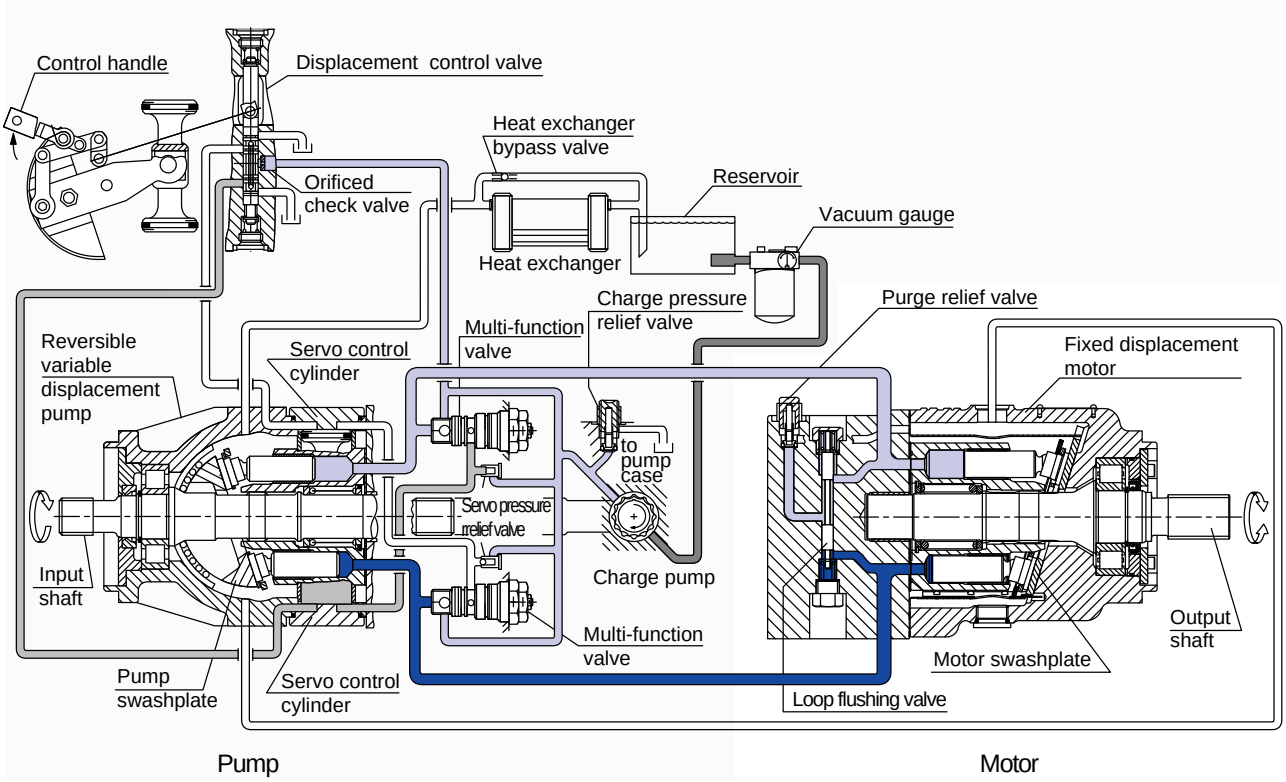

P00 1004E

Figure 1 shows a hydrostatic transmission using a series 90 axial piston variable displacement pump and a series 90 fixed displacement motor.

Type Designation and Order Code • Fixed Displacement Motors

MODEL CODE

R	M	P	J	G	N	F	L	H	T	W	Y	Z	K
9 0				NC	0	N		N	0		0 0	NNN	0 0	0 0	
				**			**		**		**				

Series or Product

90	=	Series 90, Closed Circuit

R **Design and Rotation**

M	=	SAE Flange Fixed Motor, Bi-directional
K	=	Cartridge Fixed Motor, Bi-directional

Frame Size

Displacement per revolution cm³ (in³)		
030	=	30 (1.83)
042	=	42 (2.56)
055	=	55 (3.35)
075	=	75 (4.57)
100	=	100 (6.10)
130	=	130 (7.93)

(Frame sizes 030, 100 and 130 not available as cartridge motor)

K **Charge Pressure Setting**

2 digits in full 1 bar increments.
10 bar (145 psi) minimum,
30 bar (435 psi) maximum.
00 = None

Example: **24** = 24 bar (350 psi)

W **Special Hardware Features**

NNN	=	Standard hardware	●
EAA	=	Speed sensor, Packard WP (030 thru 100)	❍

H **Charging System**

N	=	Without loop flushing (defeated) (Use setting 00)
W	=	With loop flushing valve (Use setting 10 thru 30)
X	=	No loop flushing (Not available for 055)

G

End Cap Ports (SAE J518c Code 62)	Frame Size	**030**	**042**	**055**	**075**	**100**	**130**
7 = Axial Ports		-	-	❍	❍	❍	-
8 = Twin Ports, Radial		●	●	●	●	●	●

L

Shaft Configuration	Frame Size	**030**		**042**		**055**		**075**		**100**	**130**
	Version	**M**	**K**	**M**	**K**	**M**	**K**	**M**	**K**	**M**	**M**
C2 = 13 Teeth 16/32 Pitch		●	-	●	-	-	-	-	-	-	-
C3 = 15 Teeth 16/32 Pitch		❍	-	❍	-	-	-	-	-	-	-
C4 = 15 Teeth 16/32 Pitch		-	●	-	●	-	-	-	-	-	-
C6 = 21 Teeth 16/32 Pitch		-	-	-	-	●	●	●	●	-	-
C7 = 23 Teeth 16/32 Pitch		-	-	-	-	-	-	❍	❍	●	-
C8 = 27 Teeth 16/32 Pitch		-	-	-	-	-	-	-	-	-	●
D4 = B35 x 31, DIN 5482		-	-	-	-	-	-	-	❍	-	-
F1 = 13 Teeth 8/16 pitch		-	-	-	-	-	-	-	-	❍	❍
F2 = 13 Teeth 8/16 pitch (Long)		-	-	-	-	-	-	-	-	❍	-
K1 = 1.375 in. Str. Key		-	-	-	-	❍	❍	-	-	-	-
K2 = 1.500 in. Str. Key		-	-	-	-	-	-	❍	❍	-	-
K3 = 1.750 in. Str. Key		-	-	-	-	-	-	-	-	❍	-
S1 = 14 Teeth 12/24 pitch		-	-	-	-	❍	❍	❍	❍	+❍	-
S3 = 16 Teeth 12/24 pitch		-	-	-	-	-	-	❍	❍	❍	-
T1 = 1.375 in. tapered		-	-	-	-	❍	❍	-	-	-	-
T2 = 1.500 in. tapered		-	-	-	-	-	-	❍	❍	❍	-

● = Standard
❍ = Option
- = not available
** = not applicable

Type Designation and Order Code • Variable Displacement Motors

MODEL CODE

R	M	P	J	G	N	F	L	H	T	W	Y	Z	K
9 0			0	**	N					NNN		0 0	**

Series or Product

90	=	Series 90, Closed Circuit

R Design and Rotation

V	=	SAE Flange Variable Motor, Bidirectional
C	=	Cartridge Variable Motor, Bidirectional

Frame Size

Displacement per revolution cm^3 (in^3)

055	=	55	(3.35)
075	=	75	(4.57)

M Control (Basic)

NA	=	Electrohydraulic Two-Pos., max to min disp = 12 VDC, MS
NB	=	Electrohydraulic Two-Pos., max to min disp = 12 VDC, Packard WP
NC	=	Electrohydraulic Two-Pos., max to min disp = 24 VDC, MS
ND	=	Electrohydraulic Two-Pos., max to min disp = 24 VDC, Packard WP
PT	=	Hydraulic Two-Pos., max to min disp = 12 to 35 bar (175 to 510 psi)

P Control (Options)

0	=	None (Cartridge Motor)
2	=	None (SAE Flange Motor)

G End Cap Ports (SAE J518c Code 62)

	055	075
8 = Twin Ports, Radial	●	●

N Maximum Displacement Setting

N	= 100%	●

K Charge Pressure Setting

2 digits in full 1 bar increments.
10 bar (145 psi) minimum,
30 bar (435 psi) maximum.
00 = None

Example: **24** = 24 bar (350 psi)

Y Control Piston Drain Orifice

01	= Standard Orifice ("Fast")	●
02	= Orifice Checks ("Slow")	❍

W Special Hardware Features

NNN	= Standard hardware	●
EBA	= Speed Sensor, Packard WP	❍

T Control Supply Orifice

00	= No Orifice (042)	●
01	= Standard Orifice (055 & 075)	●

H Charging System

A	= With loop flushing valve and orifice (Use setting 10 to 30) (055 only)	❍
N	= Without loop flushing (defeated) (Use setting 00)	❍
W	= With loop flushing valve (Use setting 10 to 30)	●

L Shaft Configuration

Frame Size	055		075	
Version	**V**	**C**	**V**	**C**
S1 = 14 Teeth 12/24 pitch	●	-	●	-
S7 = 14 Teeth 12/24 pitch	-	●	-	●

F Minimum Displacement Setting

(cm^3 / revolution) Specify in increments of 1 cm^3

Frame size	Standard Minimum Displacement Range
055	019 to 040
075	026 to 054

● = Standard
❍ = Option
\- = not available
** = not applicable

Sectional Views

Figure 2: Fixed displacement motor

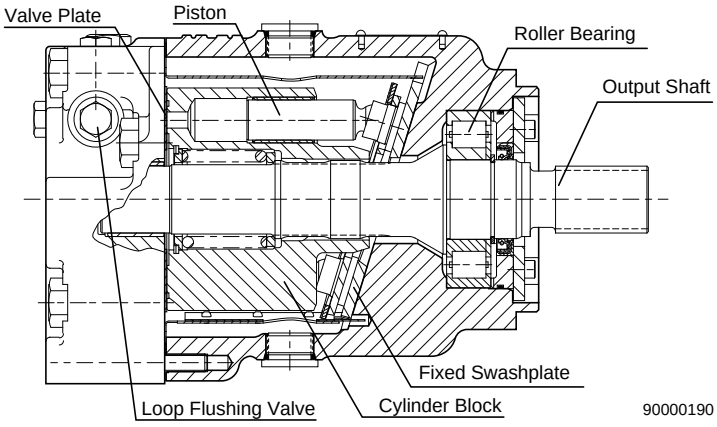

Name Plate

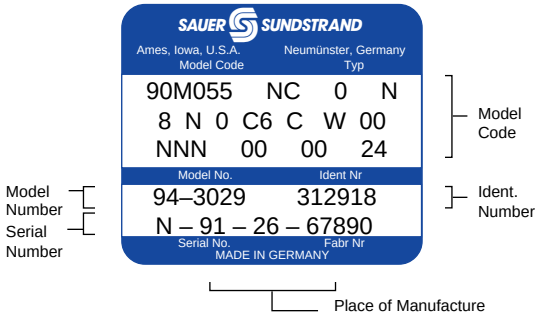

Figure 3: Variable displacement motor

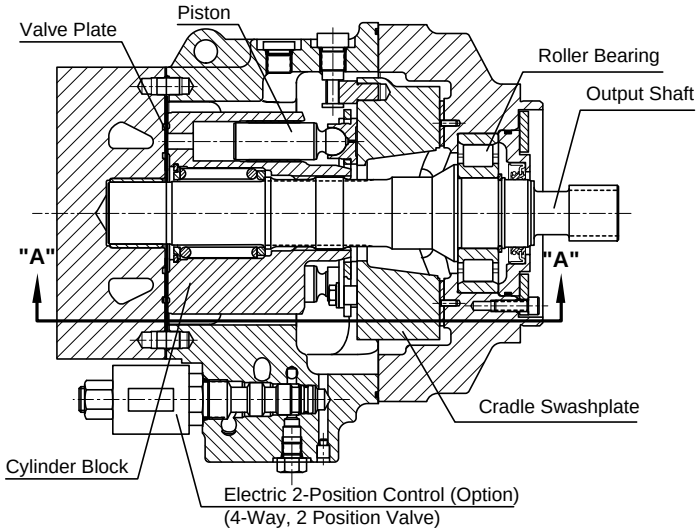

Name Plate

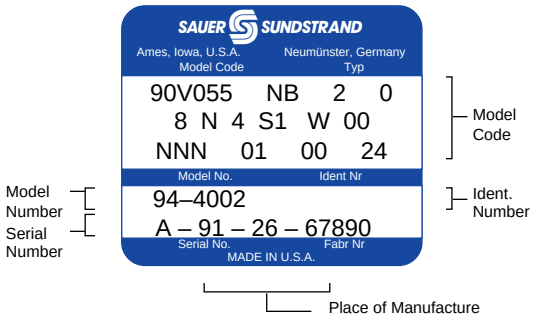

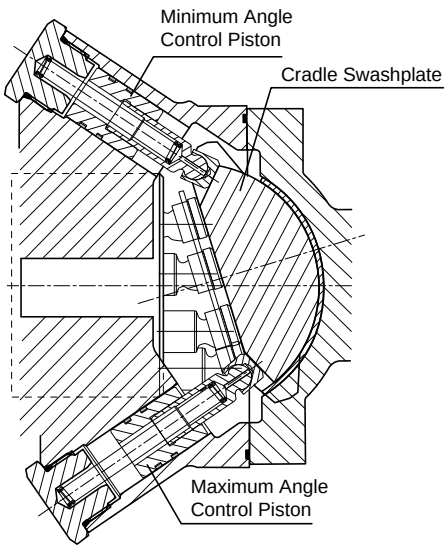

Partial Section "A-A"
Cradle Swashplate in full displacement position P001 277E

Technical Specifications - Fixed and Variable Displacement Motors

Circuit Diagram and Nomenclature

Fixed and Variable displacement motors

Figure 4: Fixed displacement motor with loop flushing valve

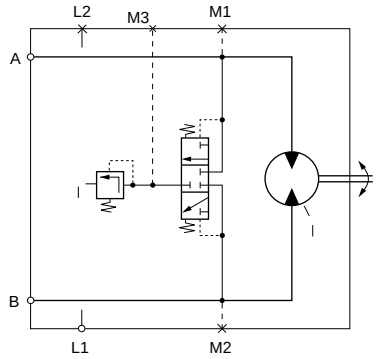

P000 777

Figure 5: Variable displacement motor with electric 2-position control and loop flushing valve

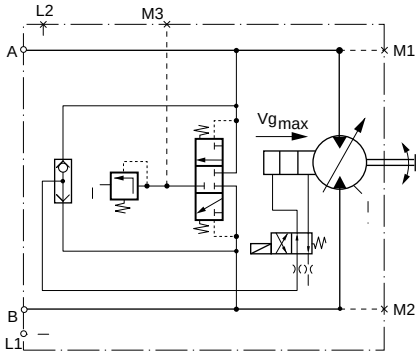

P001 273

Ports:

A, B	=	Main pressure lines
L1, L2	=	Case drain lines
M1, M2	=	Gauge port for port “A” and “B”
M3	=	Gauge port for charge pressure

Design

Fixed displacement: Axial piston motors with fixed swashplate design.
Variable displacement: Axial piston motors with cradle swashplate design

Type of Mounting

SAE Flange Configuration - Size B, C, D (SAE J 744)
Cartridge Motor Configuration - Two (2) bolt flange

Pipe Connections

Main pressure ports: SAE-Flange ports
Remaining ports: SAE straight thread O-ring boss
Refer to Dimension Drawings.

Direction of Rotation

Clockwise and counterclockwise (bidirectional).

Installation Position

Installation position discretionary.
The housing must always be filled with hydraulic fluid.

Flow Direction

Refer to Dimension Drawings.

Hydraulic Parameters

System Pressure Range, Δp

Rated pressure :	420 bar	(6000 psi)
Max. Pressure :	480 bar	(7000 psi)

Case Pressure

Max. Rated:	3 bar	(40 psi)	
Intermittent pressure:	5 bar	(75 psi)	Cold start

Hydraulic Fluid

Refer to SAUER-SUNDSTRAND Publication, BLN-9887 or 697581. Refer to ATI-E 9101 for information relating to biodegradable fluids.

Temperature Range[1)]

ϑ min =	- 40 °C	(- 40 °F)	intermittent, cold start
ϑ nenn=	104 °C	(220 °F)	continuous
ϑ max =	115 °C	(240 °F)	intermittent

at the hottest point, e.g. drain line
1) Hydraulic fluid viscosity has to be considered

Fluid Viscosity Limits

mm^2/s (1 mm^2/s = 1 cSt)			SUS (Saybolt Universal second)	
ν min	=	7	49	minimum
ν recommend	=	12 - 60	66 - 278	rated viscosity
ν max	=	1600	7500	intermittent, cold start

Filtration

Required cleanliness level: ISO 4406 Code 18/13 or better.
Refer to SAUER-SUNDSTRAND publication
BLN-9887 or 697581 and ATI-E 9201.

Technical Data

Table 1

		Dimension	Frame Size 030	042	055	075	100	130
Displacement	maximum	**cm³** in³	**30** 1.83	**42** 2.56	**55** 3.35	**75** 4.57	**100** 6.10	**130** 7.93
	minimum (MV)	**cm³** in³	**-** -	**-** -	**19** 1.16	**26** 1.59	**-** -	**-** -
Rated Speed *	at max. disp. at min. disp. (MV)	min⁻¹ (rpm) min⁻¹ (rpm)	4200 -	4200 -	3900 4600	3600 4250	3300 -	3100 -
Maximum Speed *	at max. disp. at min. disp. (MV)	min⁻¹ (rpm) min⁻¹ (rpm)	4600 -	4600 -	4250 5100	3950 4700	3650 -	3400 -
Max. Attainable Speed*	at max. disp.	min⁻¹ (rpm)	5000	5000	4700	4300	4000	3700
Theoretical Torque	at max. disp.	**Nm/bar** lbf•in/1000 psi	**0,48** 290	**0,67** 410	**0,88** 530	**1,19** 730	**1,59** 970	**2,07** 1260
	at min. disp. (MV)	**Nm/bar** lbf•in/1000 psi	**-** -	**-** -	**0,88** 530	**1,19** 730	**-** -	**-** -
Max. rated flow at max. disp.	Q max.	**l / min** gal / min	**138** 36	**193** 51	**234** 62	**296** 78	**365** 96	**442** 117
Max. corner power at max. disp.	p corner max.	**kW** hp	**110** 149	**155** 208	**187** 251	**237** 318	**292** 392	**354** 475
Mass moment of inertia of the int. rotating parts	J	**kg m²** lb • ft²	**0,0023** 0.0546	**0,0039** 0.0926	**0,0060** 0.1424	**0,0096** 0.2280	**0,0150** 0.3560	**0,023** 0.5460
Weight Fixed Motor (MF)	SAE Flange	**kg** lb	**11** 24	**15** 34	**22** 49	**26** 57	**34** 74	**45** 99
	Cartridge	**kg** lb	**-** -	**21** 46	**26** 57	**33** 72	**-** -	**-** -
Weight Variable Motor (MV)	SAE Flange	**kg** lb	**-** -	**-** -	**39** 86	**44** 98	**-** -	**-** -
	Cartridge	**kg** lb	**-** -	**-** -	**40** 88	**46** 101	**-** -	**-** -

* General Technical Specifications, see page 11

Determination of Nominal Motor Size

Metric-System:

Motor input flow: $Q_e = \frac{Vg \cdot n}{1000 \cdot \eta_v}$ l/min

Output torque: $M_e = \frac{Vg \cdot \Delta p \cdot \eta_m}{20 \cdot \pi}$ Nm

Output power: $P_e = \frac{Vg \cdot n \cdot \Delta p \cdot \eta_m}{600\,000}$ kW

Motor speed: $n = \frac{Q_e \cdot 1000 \cdot EV}{396\,000 \cdot ET}$ min⁻¹

Inch-System:

Motor input flow: $Q_e = \frac{MD \cdot MS}{231 \cdot EV}$ gpm

Output torque: $PT = \frac{MD \cdot p \cdot ET}{2 \cdot \pi}$ lbf•in

Output power: $p = \frac{MD \cdot MS \cdot p \cdot ET}{396\,000}$ hp

Motor speed: $MS = \frac{Q_e \cdot 1000 \cdot EV}{396\,000 \cdot ET}$ min⁻¹

Description:

Metric-System:

Vg	=	Motor displacement per rev.	cm³
n	=	Hydrostatic motor speed	min⁻¹
Δp	=	Differential hydraulic pressure	bar
ηv	=	Motor volumetric efficiency	
ηm	=	Motor mechanical efficiency	

Inch-System:

MD	=	Motor displacement per rev.	in³
MS	=	Hydrostatic motor speed	rpm
p	=	Differential hydraulic pressure	psi
EV	=	Motor volumetric efficiency	
ET	=	Motor mechanical (Torque) efficiency	

General Technical Specifications

Speed Range

The **Rated Speed** is the highest speed recommended at full power condition at which normal life can be expected.

All other operating conditions (e.g. fluid viscosity and temperature, charge pressure) must be within recommended ranges.

Maximum Speed is the highest operating speed permitted and cannot be exceeded without reduction in the life of the product or risking immediate failure and loss of driveline power (which may create a safety hazard).

Braking Warning !

The loss of hydrostatic driveline power in any mode (e.g. acceleration, deceleration, or neutral mode of operation) may cause a loss of braking capacity. A braking system which is independent of the hydrostatic transmission must, therefore, be provided which is adequate to stop and hold the system should the condition develop.

Maximum Attainable Speed requires approval from SAUER-SUNDSTRAND Application Engineering. Special unit hardware and/or special operating conditions may be required.

System Pressure Range

System pressure is a dominant operating variable affecting hydraulic unit life. High pressure, which results from high load, reduces expected life in a manner similar to many mechanical assemblies such as engines and gearboxes.

The **maximum pressure** is the highest intermittent pressure allowed. It is determined by the maximum machine load demand.

Maximum pressure is assumed to occur a small percentage of operating time, usually less than 2% of the total. Maximum pressure is normally the pressure relief valve setting.

It is desirable to have a machine duty cycle with the percentage of time at various loads and speeds. An appropriate design pressure can be calculated by our application department from this information. This method is recommended whenever duty cycle information is available.

Case Pressure

Under normal operating conditions, the maximum continuous case pressure must not exceed 3 bar (40 psi).

Maximum allowable intermittent case pressure during cold start must not exceed 5 bar (75 psi).

Hydraulic Fluids

Use only recommended hydraulic fluids in accordance with SAUER-SUNDSTRAND publications BLN-9887 or 697581 and ATI-E 9201.

While fluids containing anti-wear additives are not necessary for the satisfactory performance of the series 90 units, they are often required for associated equipment. These fluids must possess good thermal and hydrolytic stability to prevent wear, erosion and corrosion of internal components. It is not permissible to mix hydraulic fluids.

Fire-resistant fluids are also suitable at modified operating conditions. Please contact our application department.

Temperature Limits

For petroleum based fluids, see page 9 for maximum allowable temperatures.

These temperature limits apply at the hottest point of the transmission, which is normally the case drain.

Heat exchangers should be sized to keep the fluid within the limits.

Filtration

It is imperative that only clean fluid enter the hydrostatic transmission circuit. Filtration capable of controlling the fluid cleanliness to ISO 4406 Code 18/13 or better is recommended. Refer to SAUER-SUNDSTRAND publication BLN-9887 or 697581 for more information.

Loop Flushing

Series 90 motors incorporate an integral loop flushing valve. Loop flushing is used in installations which require additional fluid to be removed from the main hydraulic circuit because of fluid cooling requirements or circuits requiring additional loop flow to remove excessive contamination in the high pressure circuit.

Charge Pressure

Series 90 motors equipped with an integral loop flushing valve also include a charge pressure relief valve. The charge pressure setting listed in the Model Code is referenced to motor case pressure and is based on a fluid temperature of 120° F (50° C) with a flow of 4 GPM (15.1 lpm) across the valve.

When Series 90 Variable Displacement Pumps and Fixed Displacement Motors are used in a circuit, both the pump and the motor normally use the same nominal charge pressure setting.

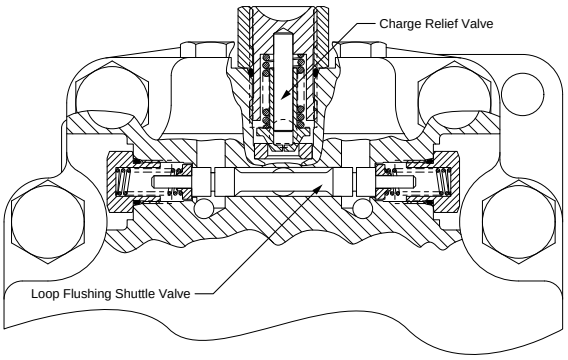

90000238

The setting of the motor charge relief valve affects the function of the loop flushing circuit. Higher motor charge relief settings reduce the loop flushing flow and increase the flow over the pump charge pressure relief valve when the circuit is operating. Lower motor charge relief settings increase the loop flushing flow and may increase the motor case pressure when the circuit is operating. An appropriate combination of pump and motor charge pressure settings should be selected to insure the proper function of the loop flushing circuit. Correct charge pressure must be maintained under all conditions of operation to maintain pump control performance.

Loop Flushing Flow for Variable Pump / Fixed Motor Circuit l/min (gpm)									
Charge Relief Valve Setting		Nominal Charge Pump Flow Available from Pump							
Series 90 Fixed Motor	Series 90 Variable Pump	19 l/min (5 gpm)		38 l/min (10 gpm)		57 l/min (15 gpm)		76 l/min (20 gpm)	
20 bar (290 psi)	20 bar (290 psi)	5.7	(1.5)	6.4	(1.7)	7.6	(2.0)	9.5	(2.5)
24 bar (350 psi)	20 bar (290 psi)	N/R		N/R		N/R		N/R	
20 bar (290 psi)	24 bar (350 psi)	8.3	(2.2)	14.0	(3.7)	15.5	(4.1)	16.7	(4.4)
24 bar (350 psi)	24 bar (350 psi)	4.9	(1.3)	5.7	(1.5)	7.2	(1.9)	8.7	(2.3)

Bypass Function

In some applications it is desirable to bypass fluid around the variable displacement pump allowing, for example, a vehicle to be moved short distances at low speeds without running the prime mover. Series 90 pumps are designed with a bypass function integral with the multi-function valve assemblies. See Bulletin BLN-10029 for more information.

Overpressure Protection

The Series 90 motor (as well as other system components) has pressure limitations. A relief valve or pressure limiting device should be present in the high pressure circuit to protect the components from excessive pressure.

Series 90 pumps are designed with a sequenced pressure limiting system and high pressure relief valves. When the pre-set pressure is reached, the pressure limiter system acts to rapidly destroke the pump so as to limit the system pressure. For unusually rapid load application, the high pressure relief valve function is available to also limit the pressure level. Refer to BLN-10029 for more information

NOTE: High pressure relief valves are intended for overpressure protection and are not intended for pressure control purposes. Operation over relief valves for extended periods of time may result in severe heat build up and damage to the unit.

Charge Flow Requirements

A) Charge Flow Requirement - Pump

Refer to the product information for the specific pump being used in the circuit to determine the charge flow requirement, QP.

B) Charge Flow Requirement — Motor

- Determine the motor speeds and the maximum system pressure.
- Referring to the accompanying figure, “Charge Flow Requirement - Series 90 Motor,” determine the flow factor of the motor, FM.
- Using the following equation, determine charge flow requirement for the Motor:

QM=(FMxFS)/75=CFR-Motor(gpm)

QM=(FMxFS)/75=CFR-Motor(l/min)

where:

FS: Frame Size

CFR: Charge Flow Required

C) Total Charge Flow Requirements

The total charge flow requirement (QT) is the sum of the flow requirements of each of the components in the system; namely:

$$QT = QP + QM_1 + QM_2 + ... + Q_{Auxiliary} =$$

Total Charge Flow Req’d.

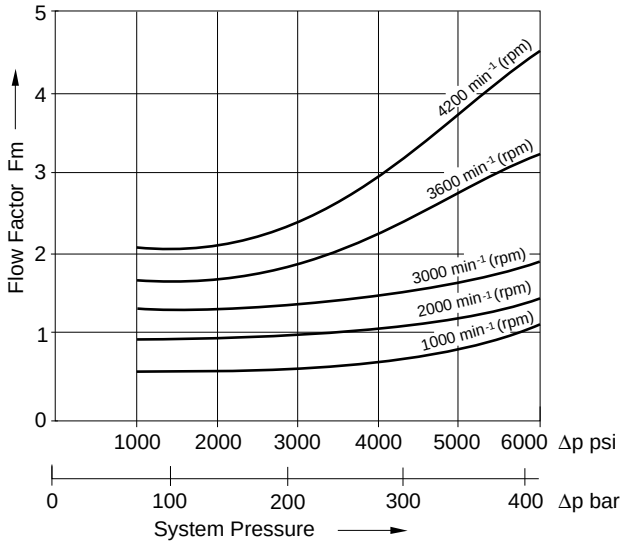

Charge Flow Requirements - Series 90 Motors

Shaft Options

Series 90 motors are available with a variety of splined, straight keyed, and tapered shaft ends. Nominal shaft sizes and torque ratings are shown in the accompanying table.

Torque ratings are based on no external radial loading. Maximum torque ratings assume 200,000 load reversals. Continuous torque ratings for splined shafts are based on spline tooth wear, and assume the mating spline has a minimum hardness of Rc 55 and full spline depth with good lubrication.

Shaft Availability and Torque Ratings

All torque ratings in lbf.in. (Nm)

Shaft Description	Option Code	Torque Rating			Frame Size Availability			
			Nm	(in•lbf)	055	075	100	130
21 Tooth, 16/32 Pitch Spline	C6	Maximum: Continuous:	1130 384	(10,000) (3400)	●	●	×	×
23 Tooth, 16/32 Pitch Spline	C7	Maximum: Continuous:	1580 509	(14,000) (4500)	×	●	●	×
27 Tooth, 16/32 Pitch Spline	C8	Maximum: Continuous:	2938 814	(26,000) (7200)	×	×	×	●
13 Tooth, 8/16 Pitch Spline	F1	Maximum: Continuous:	1810 746	(16,000) (6600)	×	×	●	●
13 Tooth, 8/16 Pitch Spline (long)	F2	Maximum: Continuous:	1810 746	(16,000) (6600)	×	×	●	×
14 Tooth, 12/24 Pitch Spline	S1	Maximum: Continuous:	735 283	(6500) (2500)	●	●	❍	×
34.93 mm (1.375 in) Dia 1 mm/8 mm (1.5 in/ft) Taper	T1	Contact Sauer-Sundstrand			●	×	×	×
38.1 mm (1.50 in) Dia 1 mm/8 mm (1.5 in/ft) Taper	T2	Contact Sauer-Sundstrand			×	●	●	×
34.9 mm (1.374 in) Dia Straight Keyed	K1	Contact Sauer-Sundstrand			●	×	×	×
38.07 mm (1.499 in) Dia Straight Keyed	K2	Contact Sauer-Sundstrand			×	●	×	×
44.42 mm (1.749 in) Dia Straight Keyed	K3	Contact Sauer-Sundstrand			×	×	●	×

● = Shaft Option Available ❍ = Not recommended in all applications × = Shaft Option Not Available

External Shaft Load Limits

Series 90 motors are designed with bearings that can accept external radial and thrust loads. The external radial shaft loads are a function of the load position, the load orientation, and operating condition of the unit.

The maximum allowable radial loads (Re), based on the maximum external moment (Me) and the distance (L) from the mounting flange to the load, may be determined from the accompanying table and diagram. Also shown are the thrust load limits.

Motor Frame Size	055	075	100	130
Max. Allowable External Loads 1) Max. Radial Load Remax= Me/(C+L)				
Me @ 0° Nm (lbf.in.)	177 (1560)	351 (3090)	364 (3210)	158 (1400)
Me @ 90°, 180°, & 270° Nm (lbf.in.)	535 (4710)	614 (5410)	851 (7500)	282 (2500)
"C" m (in)	.0274 (1.08)	.0236 (0.93)	.0356 (1.40)	.0330 (1.30)
2) Max. Thrust In (T_{in}) N (lbf.)	1779 (400)	2224 (500)	3002 (675)	5207 (1170)
3) Max. Thrust Out (T_{out}) N (lbf.)	489 (110)	801 (180)	890 (200)	667 (150)

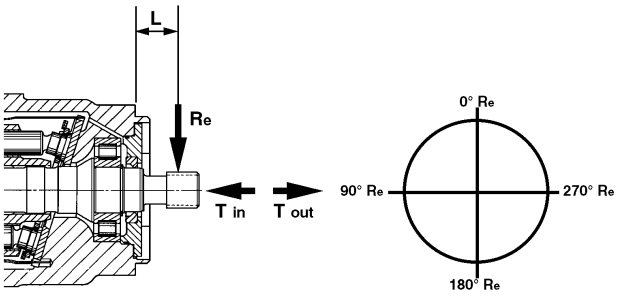

External Shaft Load Orientation

Bearing Life

(With No External Shaft Loads)

Normal bearing B_{10} life in hours is indicated in the accompanying table at 240 bar (3500 psi), 1800 RPM shaft speed, and no external load.

Motor Frame Size	055	075	100	130
Bearing Life - B_{10} Hours	15150	16500	17550	24920

Bearing Life

(With External Shaft Loads)

Equations for Calculation of Bearing Life

Bearing Load "H" – Radial Load resulting from Hydraulic Pressure (Fixed Motor)

$$H = 0.2\ Kh\ (PSI + 600)$$

Motor Frame Size	055	075	100	130
K_h (Hyd. Load Constant) kg (lbf.)	12.56 (1.91)	15.44 (2.35)	18.58 (2.82)	21.8 (3.38)

Bearing Load "E" – Radial Load resulting from External Overhung Load (Re) at Distance L (Fixed Motor)

Motor Frame Size	055	075	100	130
E = Re: lbf L:in	Re(L+6.8)/6.0	Re(L+7.7)/6.7	Re(L+8.5)/7.4	Re(L+9.3)/8.1
E = Re:N L:m	Re(L+.174)/.151	Re(L+.195).170	Re(L+.215)/.188	Re(L+.238)/.205

Load Constant "Kb" (for each Frame Size)

Motor Frame Size	055	075	100	130
K_b (Bearing Load Constant) kg (lbf.)	6510 (14480)	8255 (18190)	10100 (22260)	11000 (24720)

Theoretical Motor Bearing Life with External Loads (B_{10}) — Hours

$$B_{10} = \frac{16667}{RPM}\left[\frac{Kb}{H - E}\right]^{3.33}$$

Re at 0°

$$B_{10} = \frac{16667}{RPM}\left[\frac{Kb}{H + E}\right]^{3.33}$$

Re at 180°

$$B_{10} = \frac{16667}{RPM}\left[\frac{Kb}{(H2 + E2).5}\right]^{3.33}$$

Re at 90° or 270°

Efficiency of Series 90 Motors

Overall and Volumetric Efficiencies

The following graph provides typical volumetric and overall efficiencies for Series 90 Motors. This efficiency graph can be used for all frame size motors.

Motor Efficiency

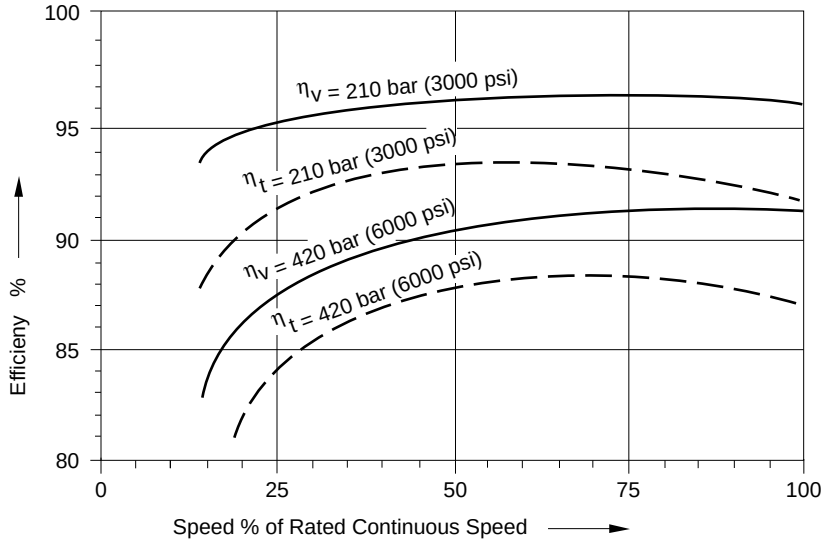

Motor Efficiency Map

The following performance map provides typical motor overall efficiencies at various operating parameters. This efficiency map can be used for all frame size motors.

Motor Overall Efficiency

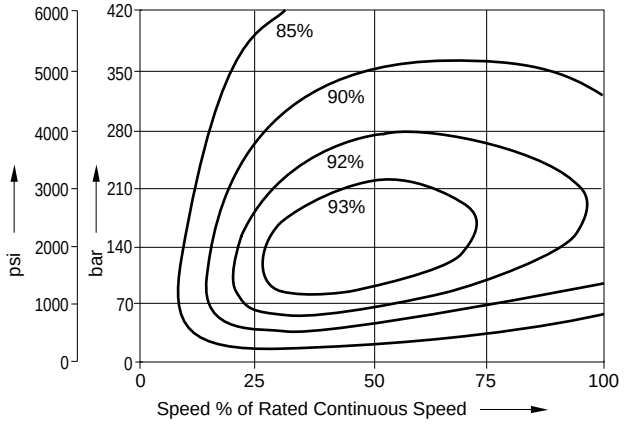

Notes

Frame Size 055 - Fixed Displacement Motor Installation Drawings

Motor Shaft Rotation	Flow Direction	
	Port "A"	Port "B"
Clockwise (CW)	Out	In
Counterclockwise (CCW)	In	Out

Shaft rotation is determined by viewing the motor from the output shaft end

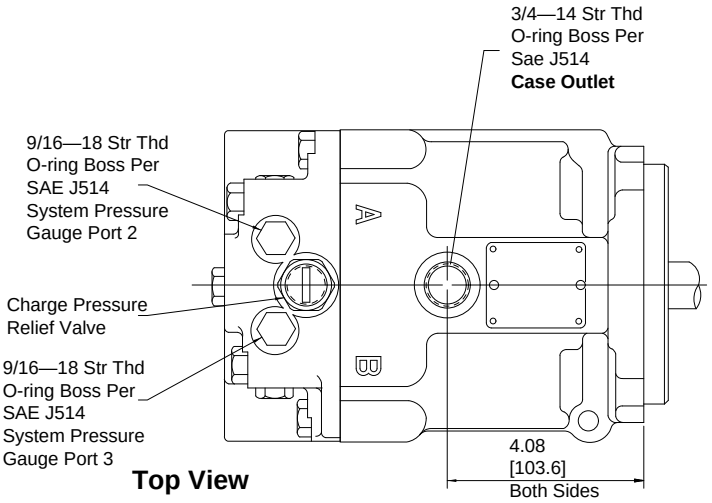

Top View

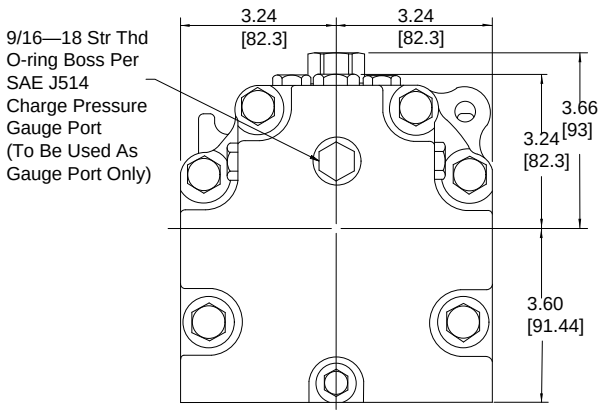

Rear View
(Twin Port End Cap)

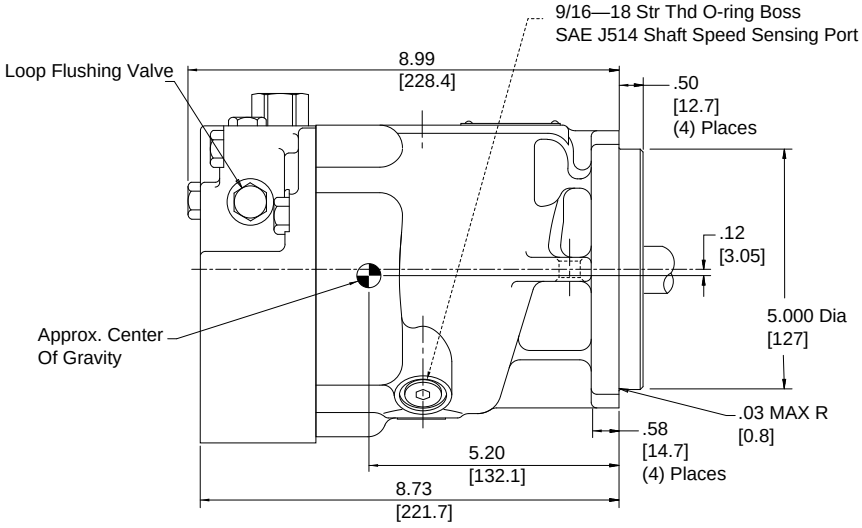

Side View

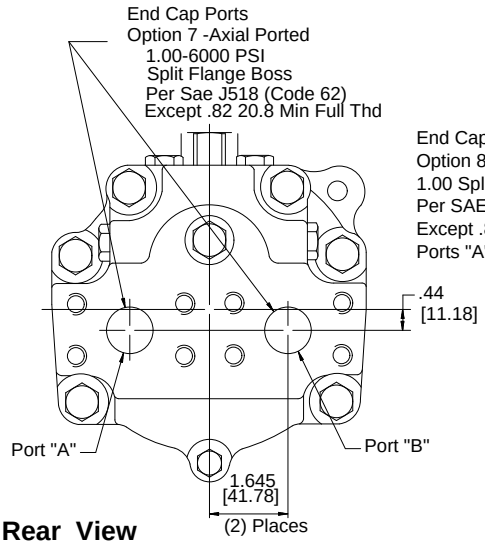

Rear View
(Axial Port End Cap)

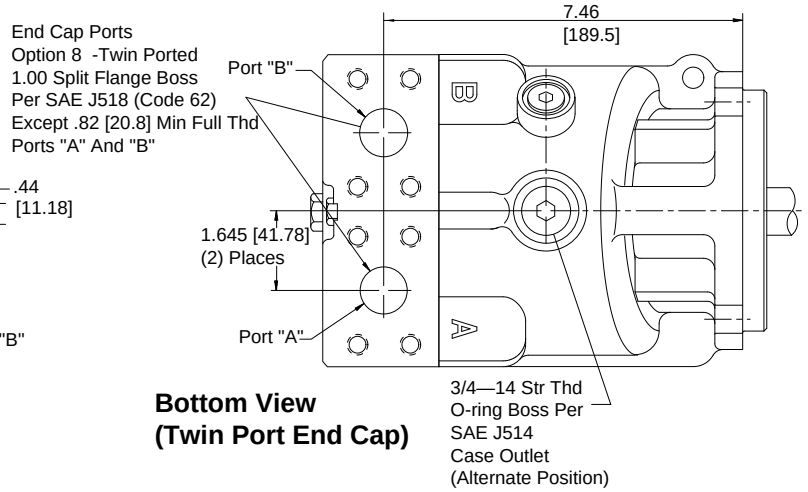

Bottom View
(Twin Port End Cap)

NOTE: ALL SAE STR THE O-RING PORTS PER SAE J514.

Frame Size 055 - Fixed Displacement Motor Installation Drawings

in

[mm]

Splined Output Shaft Options						
Output Shaft Option	Shaft Diameter T	Full Spline Length U	Major Dia. V	Pitch Dia. W	Number of Teeth Y	Pitch Z
S1 in (mm)	.98 (24.9)	1.10 (27.9)	1.2258 (31.13)	1.667 (29.634)	14	12/24
C6 in (mm)	1.14 (29)	1.28 (32.5)	1.3550 (34.42)	1.3125 (33.38)	21	16/32

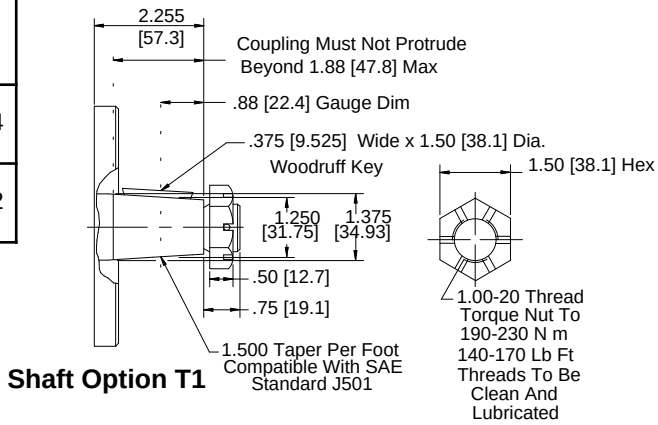

Shaft Option T1

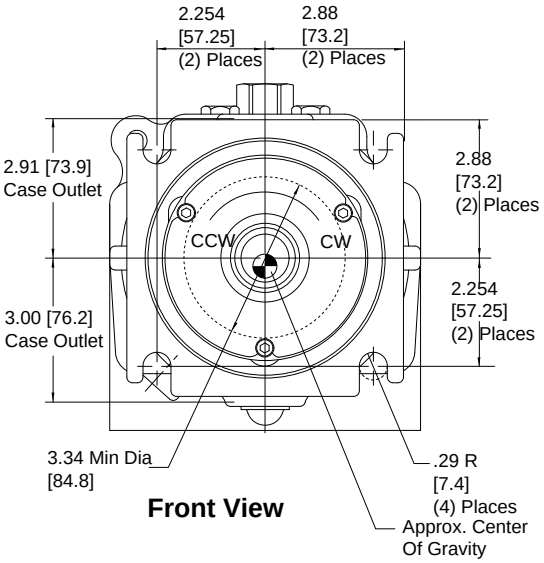

Front View

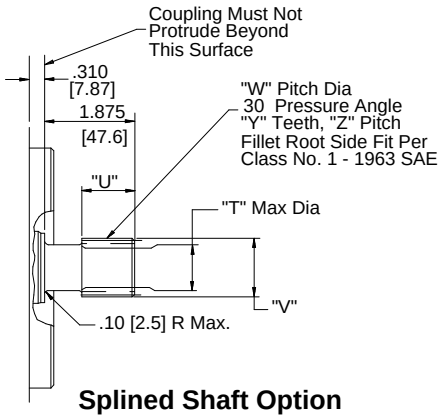

Splined Shaft Option (See Table)

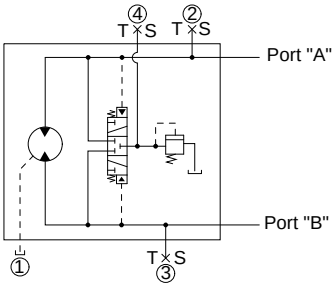

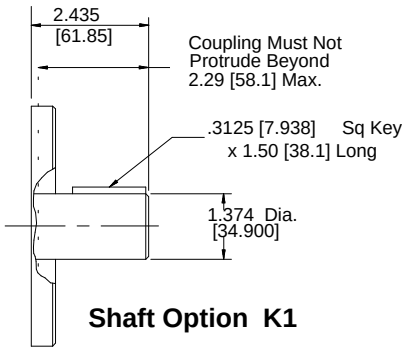

Shaft Option K1

Frame Size 075 - Fixed Displacement Motor Installation Drawings

Motor Shaft Rotation	Flow Direction	
	Port "A"	Port "B"
Clockwise (CW)	Out	In
Counterclockwise (CCW)	In	Out

Shaft rotation is determined by viewing the motor from the output shaft end

in

[mm]

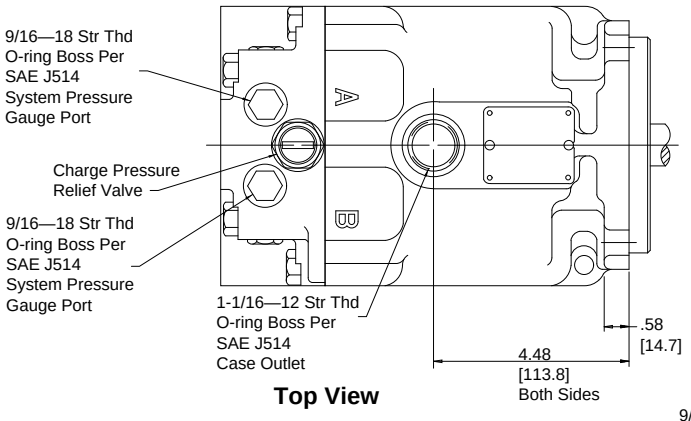

Top View

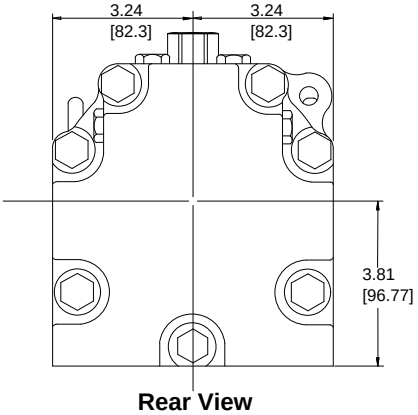

Rear View
(Twin Port End Cap)

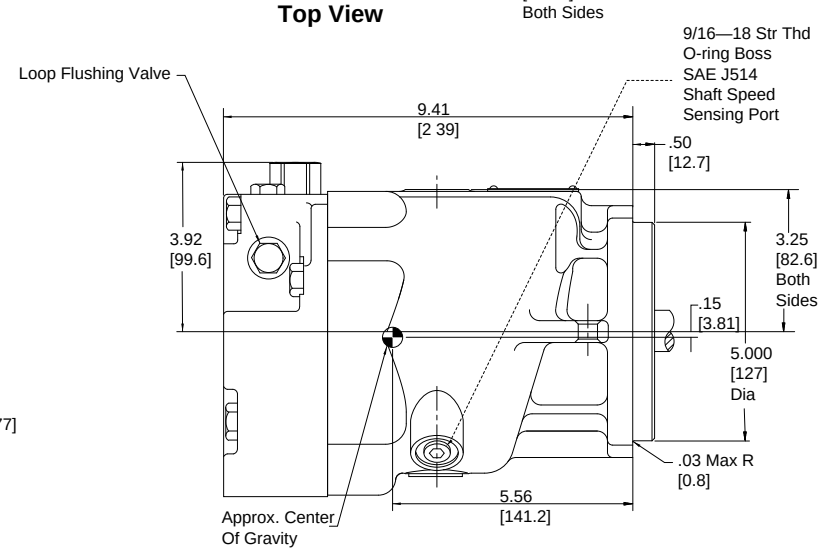

Side View

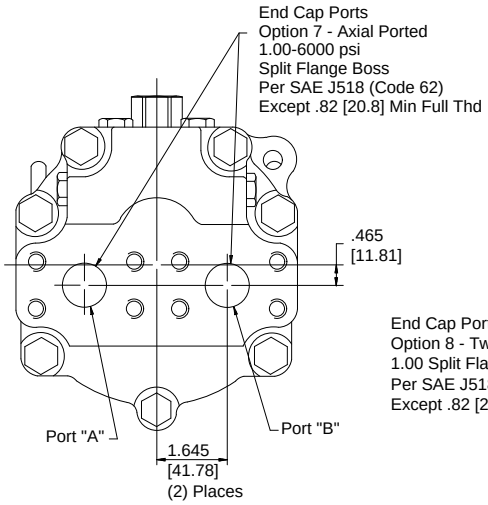

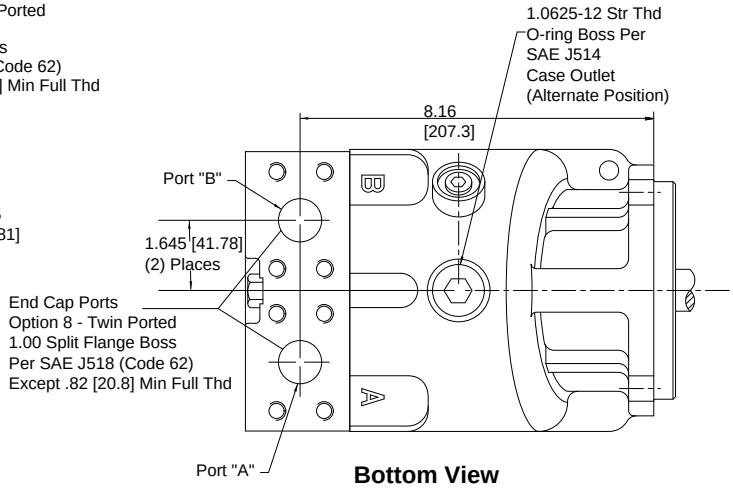

Bottom View
(Twin Port End Cap)

NOTE: ALL SAE STR THE O-RING PORTS PER SAE J514.

Frame Size 075 - Fixed Displacement Motor Installation Drawings

Splined Shaft Options						
Output Shaft Option	Shaft Diameter T	Full Spline Length U	Major Dia. V	Pitch Dia. W	Number of Teeth Y	Pitch Z
S1 in (mm)	.98 (24.9)	1.10 (27.9)	1.2258 (31.13)	1.1667 (29.634)	14	12/24
C6 in (mm)	1.14 (29)	1.28 (32.5)	1.3550 (34.42)	1.3125 (33.338)	21	16/32
C7 in (mm)	1.27 (32.3)	1.37 (34.8)	1.480 (37.39)	1.4375 (36.513)	23	16/32

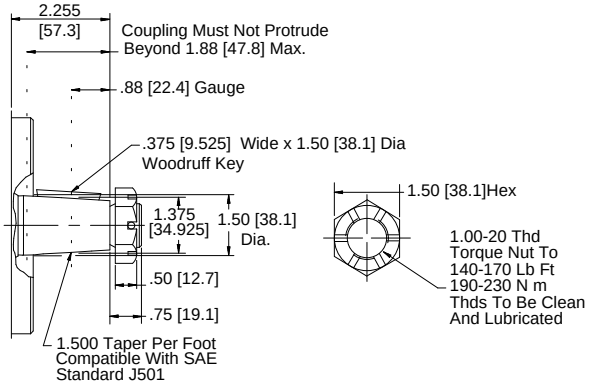

Shaft Option T2

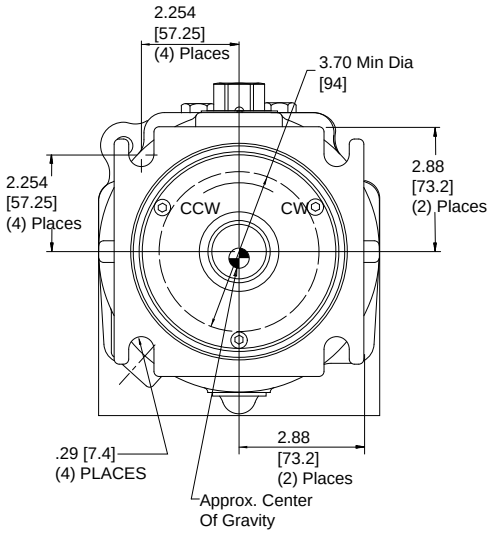

Front View

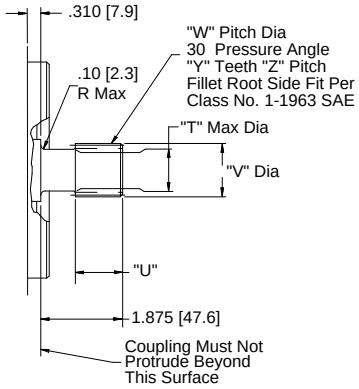

Splined Shaft Option (See Table)

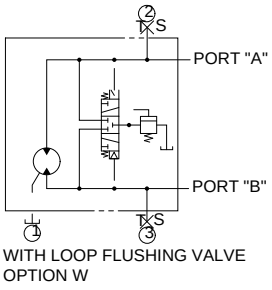

WITH LOOP FLUSHING VALVE
OPTION W

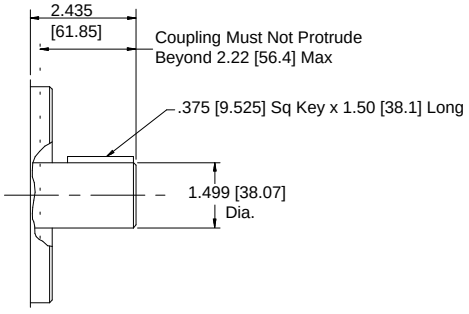

SHAFT OPTION K2

Frame Size 100 - Fixed Displacement Motor Installation Drawings

in

[mm]

Motor Shaft Rotation	Flow Direction	
	Port "A"	Port "B"
Clockwise (CW)	Out	In
Counterclockwise (CCW)	In	Out

Shaft rotation is determined by viewing the motor from the output shaft end

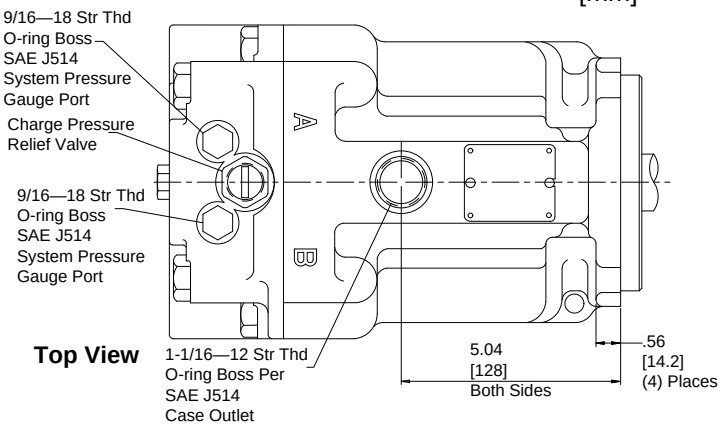

Top View

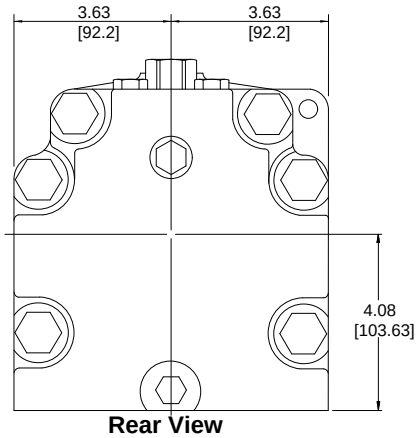

Rear View
(Twin Port End Cap)

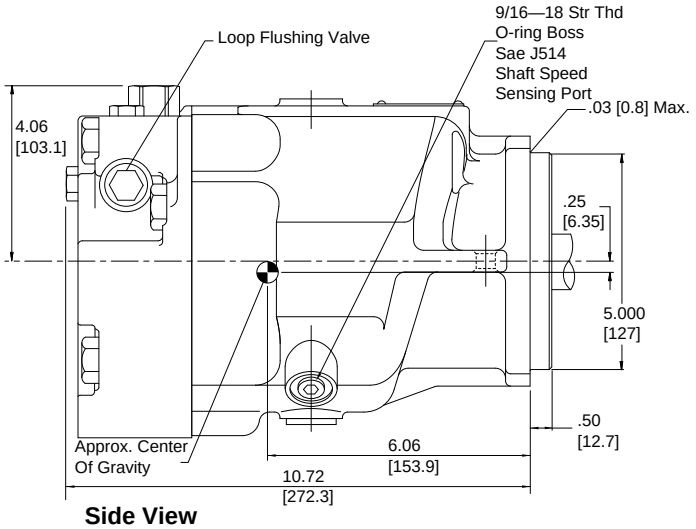

Side View

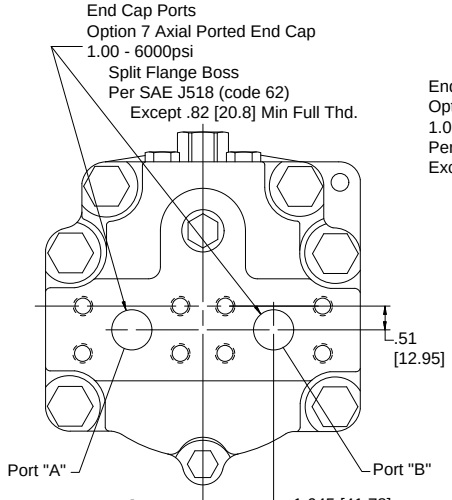

Rear View
(Axial Port End Cap)

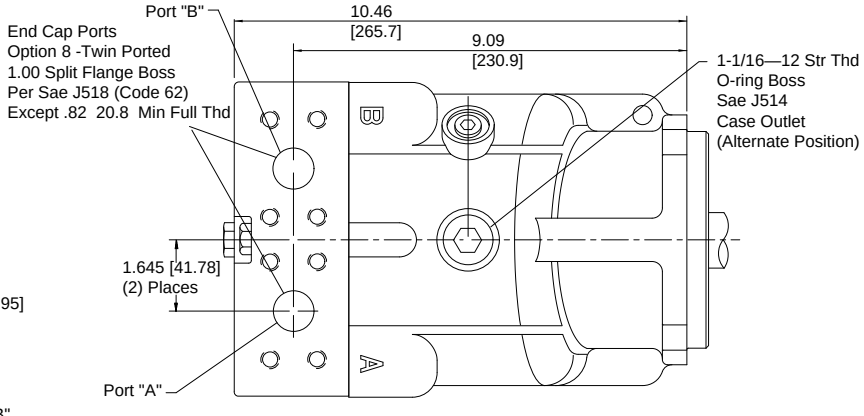

Bottom View
(Twin Port End Cap)

NOTE: ALL SAE STR THE O-RING PORTS PER SAE J514.

Frame Size 100 - Fixed Displacement Motor Installation Drawings

Splined Shaft Options							
Output Shaft Option	Shaft Dia. T	Full Length U	Major Dia V	Pitch Dia. W	Number of Teeth Y	Pitch Z	Length S
C7 in (mm)	1.27 (32.3)	1.37 (34.8)	1.480 (37.59	1.4375 (36.513)	23	16/32	1.875 (47.6)
F1 in (mm)	1.36 (34.5)	1.53 (38.9)	1.730 (43.94)	1.6250 (41.275)	13	8/16	2.625 (66.7)
F2 in (mm)	1.36 (34.5)	1.53 (38.9)	1.730 (43.94)	1.625 (41.275)	13	8/16	3.32 (84.3)

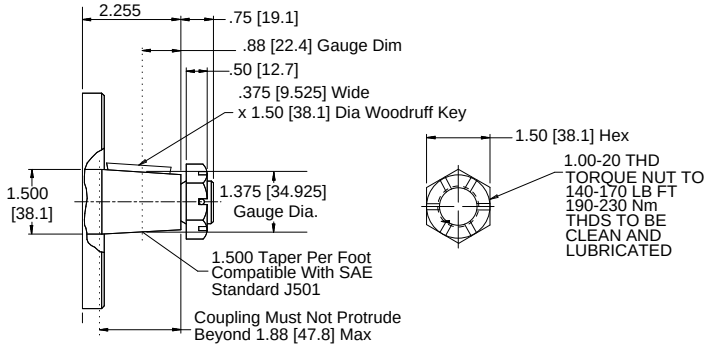

Shaft Option T2

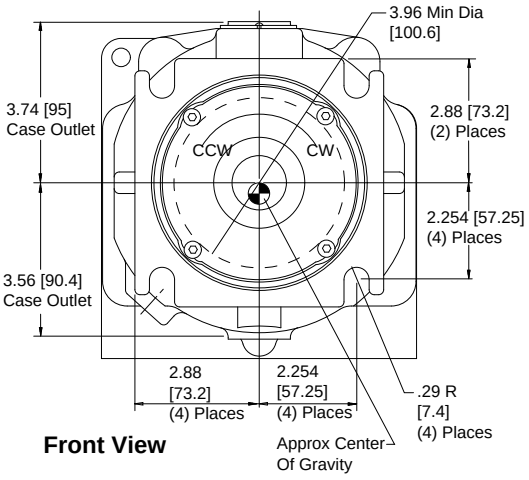

Front View

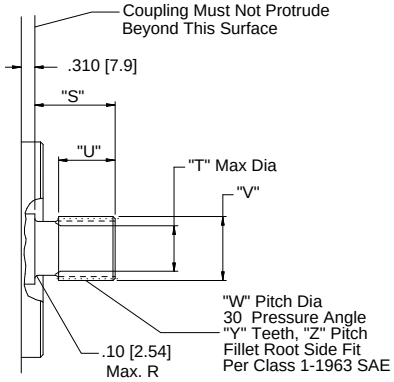

Splined Shaft Option (See Table)

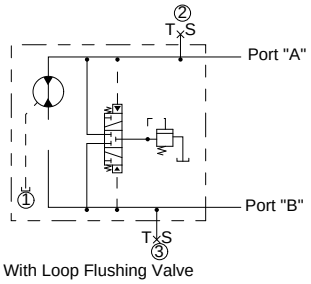

With Loop Flushing Valve
Option W

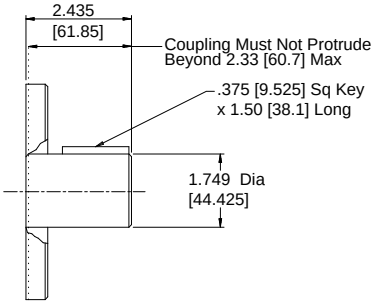

Shaft Option K3

Frame Size 130 - Fixed Displacement Motor Installation Drawings

in

[mm]

Motor Shaft Rotation	Flow Direction	
	Port "A"	Port "B"
Clockwise (CW)	Out	In
Counterclockwise (CCW)	In	Out

Shaft rotation is determined by viewing the motor from the output shaft end

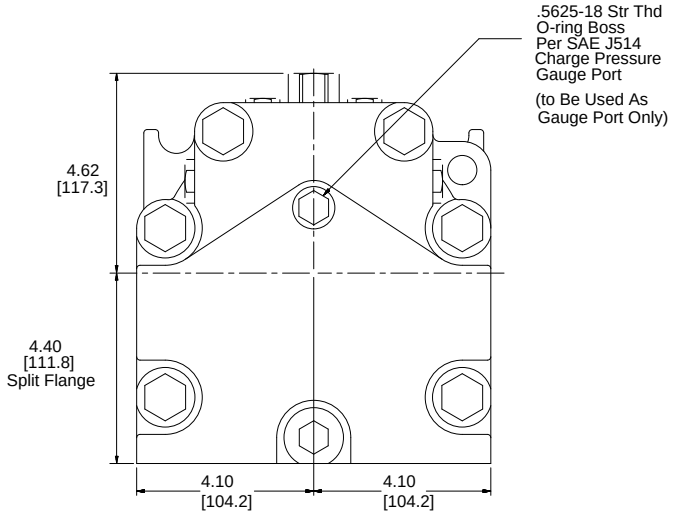

Rear View

NOTE: ALL SAE STR THE O-RING PORTS PER SAE J514.

Frame Size 130 - Fixed Displacement Motor Installation Drawings

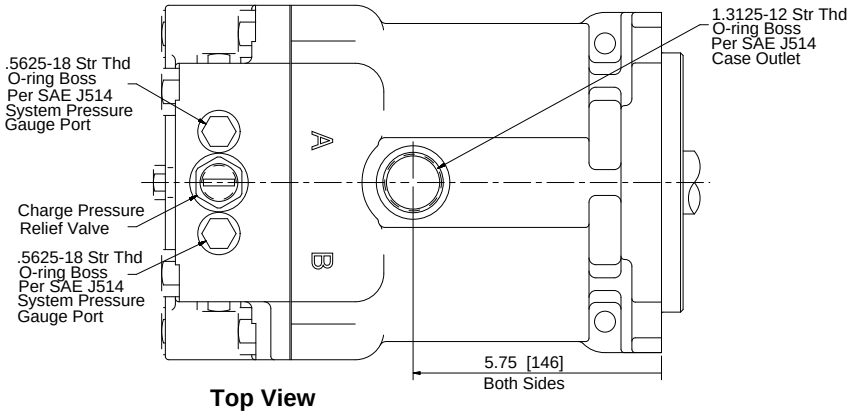

Top View

Splined Shaft Options				
Output Shaft Option	Shaft Dia. T	Pitch Dia. W	Number of Teeth Y	Pitch Z
F1 in (mm)	1.36 (34.5)	1.625 (41.275)	13	8/16
C8 in (mm)	1.48 (37.5)	1.6875 (42.862)	27	16/32

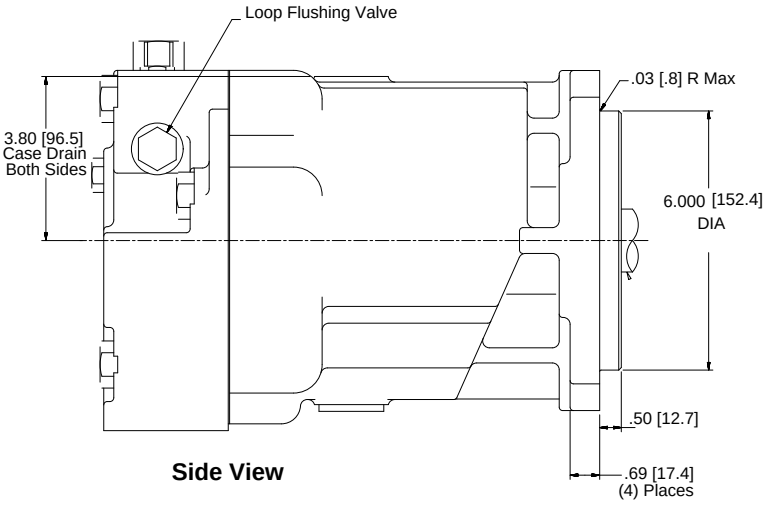

Side View

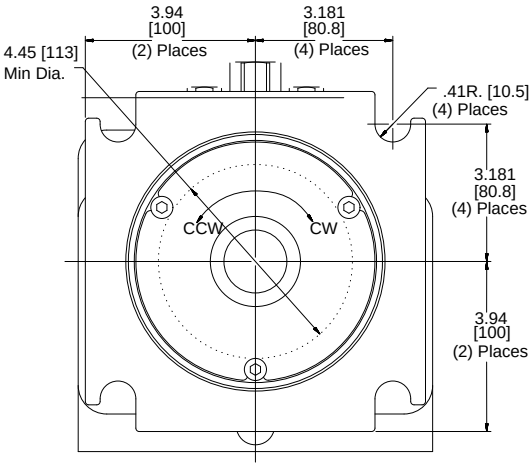

Front View

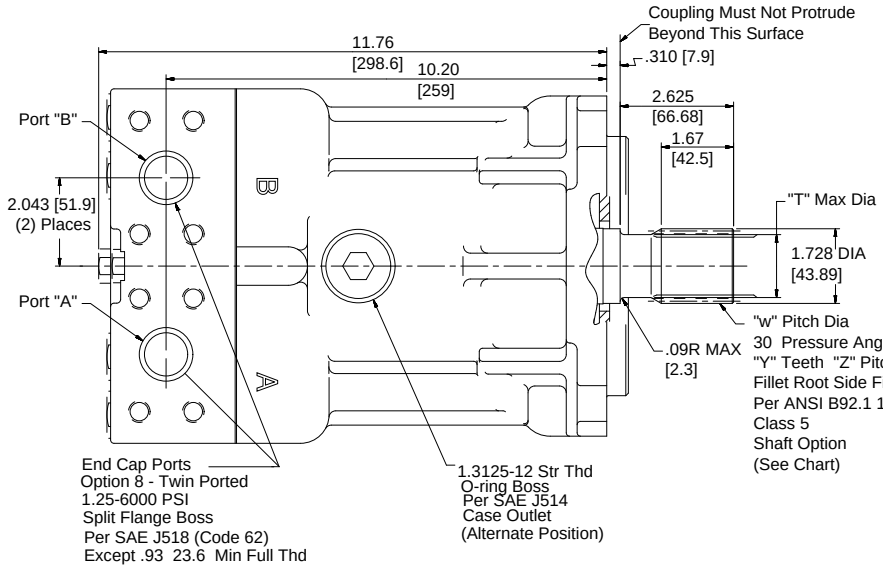

Bottom View

