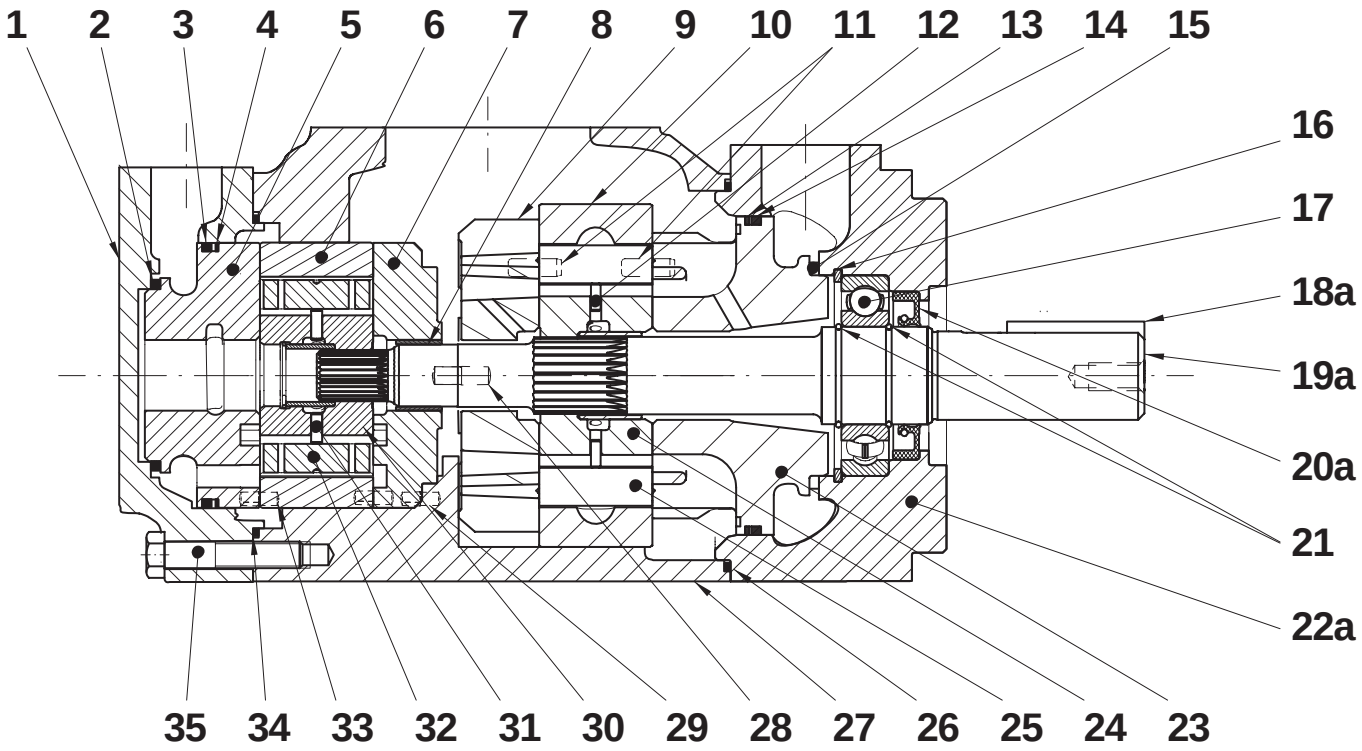

Hydraulic Pumps - Service Information T67DC

Denison Vane - Flügelzellen - Palettes - Palette - Paletas

aerospace
climate control
electromechanical
filtration
fluid & gas handling
hydraulics
pneumatics
process control
sealing & shielding

ENGINEERING YOUR SUCCESS.

T67DC

	Item - Pos. - Réf. - Pos.	
	35	38
Mounting torque		
Anziehdrehmoment	68 Nm	187 Nm
Couple de serrage	50 ft.lbs	138 ft.lbs
Coppia di serragio		
Par de apriete		

Recommended repair kits and assy's are bold printed
Empfohlene Austausch - Baugruppen sind fett gedruckt
Les pochettes de rechange recommandées sont imprimées en caractères gras
I kit di ricambio consigliati sono indicati in grassetto
Los juegos de reparacion recommendados y los conjuntos, estan en negrita

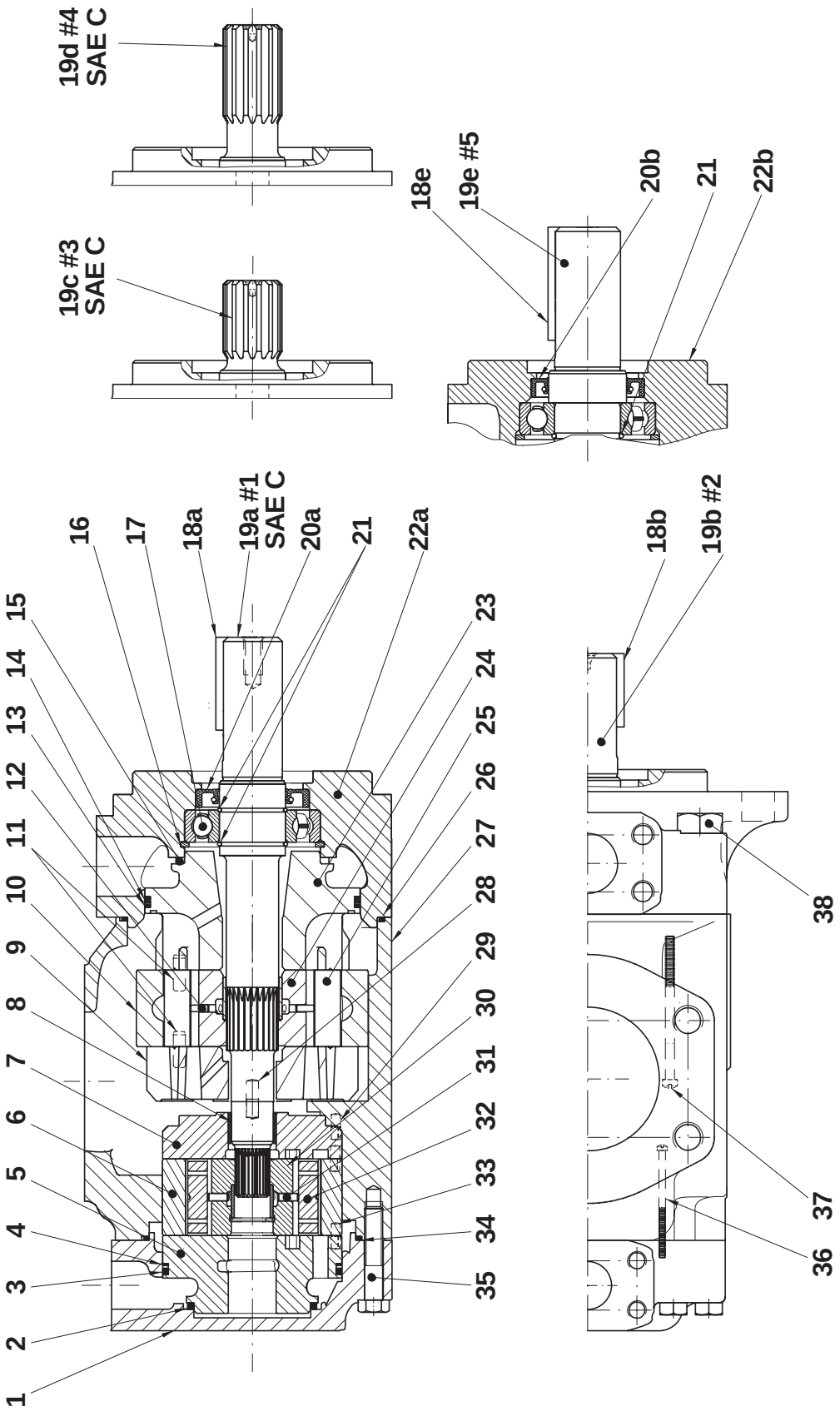

Parker Hannifin SAS
VPDE, Denison Vane Pumps
Vierzon - France

Item Pos. Réf. Pos. Pos.	Description Descrizione	Benennung Descripcion	Description		Part N° Teil Nr. Code N° Cod. N° Referencia	Qty Stück Qté Q.tà Cant.
1	End cap (metric 3/4") Coperchio (metrica 3/4")	Deckel (Metrisch 3/4") Tapa (metrico 3/4")	Chapeau (métrique 3/4")		034-66765-0	1
	End cap (UNC 3/4") Coperchio (UNC 3/4")	Deckel (UNC 3/4") Tapa (UNC 3/4")	Chapeau (UNC 3/4")		034-66523-0	1
	End cap (metric 1") Coperchio (metrica 1")	Deckel (Metrisch 1") Tapa (metrico 1")	Chapeau (métrique 1")		034-71327-0	1
	End cap (UNC 1") Coperchio (UNC 1")	Deckel (UNC 1") Tapa (UNC 1")	Chapeau (UNC 1")		034-48579-0	1
2	Sq. section seal Guarnizione	Dichtring Junta seccion cuadrada	Joint section carrée	BC	691-10229-0	1
3	Sq. section seal Guarnizione	Dichtring Junta seccion cuadrada	Joint section carrée	BC	691-10232-0	1
4	Back-up ring Anello anti-estrusione	Stützring Anillo	Bague anti-extrusion	BC	618-00010-3	1
5	Port plate-pressure C.C.W. Piatto distributore anter.antioraria	Steuerplatte Linkslauf Plato distribuidor-presión giro I	Plaque press. rot. gauche	B	034-59772-0	1
	Port plate-pressure C.W. Piatto distributore anter. Oraria	Steuerplatte Rechtslauf Plato distribuidor-presión giro D	Plaque press. rot. droite	B	034-59773-0	1
6	Cam ring 003 Anello camma 003	Hubring 003 Aro volumetrico 003	Came 003	B	034-59050-0	1
	Cam ring 005 Anello camma 005	Hubring 005 Aro volumetrico 005	Came 005	B	034-59051-0	1
	Cam ring 006 Anello camma 006	Hubring 006 Aro volumetrico 006	Came 006	B	034-59052-0	1
	Cam ring 008 Anello camma 008	Hubring 008 Aro volumetrico 008	Came 008	B	034-59053-0	1
	Cam ring 010 Anello camma 010	Hubring 010 Aro volumetrico 010	Came 010	B	034-59054-0	1
	Cam ring 012 Anello camma 012	Hubring 012 Aro volumetrico 012	Came 012	B	034-66595-0	1
	Cam ring 014 Anello camma 014	Hubring 014 Aro volumetrico 014	Came 014	B	034-59206-0	1
	Cam ring 017 Anello camma 017	Hubring 017 Aro volumetrico 017	Came 017	B	034-59207-0	1
	Cam ring 020 Anello camma 020	Hubring 020 Aro volumetrico 020	Came 020	B	034-66607-0	1
	Cam ring 022 Anello camma 022	Hubring 022 Aro volumetrico 022	Came 022	B	034-59208-0	1
	Cam ring 025 Anello camma 025	Hubring 025 Aro volumetrico 025	Came 025	B	034-59209-0	1
	Cam ring 028 Anello camma 028	Hubring 028 Aro volumetrico 028	Came 028	B	034-59245-0	1
	Cam ring 031 Anello camma 031	Hubring 031 Aro volumetrico 031	Came 031	B	034-66843-0	1
7	Port plate-rear C.C.W. Piatto distributore post. Antioraria	Steuerplatte Linkslauf Plato distribuidor trasero giro I	Plaque arr. rotation gauche	BM	034-59776-0	1
	Port plate-rear C.W. Piatto distributore post. Oraria	Steuerplatte Rechtslauf Plato distribuidor trasero giro D	Plaque arr. rotation droite	BN	034-59777-0	1
8	Bush Bussola	Buchse Cojinete de fricción	Bague	BMN	034-70868-0	1

Parker Hannifin SAS
VPDE, Denison Vane Pumps
Vierzon - France

Item Pos. Réf. Pos. Pos.	Description Descrizione	Benennung Descripcion	Description		Part N° Teil Nr. Code N° Cod. N° Referencia	Qty Stück Qté Q.tà Cant.
9	Port plate-rear (Except cam rings 045 - 050)	Steuerplatte (außer Hubringe 045-050)	Plaque arrière (Excepté cames 045 - 050)	AJ	034-67478-0	1
	Piatto distributore post. (Eccetto anello camma 045-050)	Plato distribuidor trasero ((Excepto los aros 045-050)				
	Port plate-rear C.C.W. (Only cam ring 045 - 050)	Steuerplatte Linkslauf (nur Hubringe 045-050)	Plaque arr. rotation gauche (Seul. cames 045-050)	AL	034-67114-0	1
	Piatto distributore post. Antioraria (Solo anello camma 045-050)	Plato distribuidor trasero giro I (Solo los aros 045-050)				
	Port plate-rear C.W. (Only cam ring 045 - 050)	Steuerplatte Rechtslauf (nur Hubringe 045-050)	Plaque arr. rotation droite (Seul. cames 045-050)	AK	034-67112-0	1
	Piatto distributore post. Oraria (Solo anello camma 045-050)	Plato distribuidor trasero giro D (Solo los aros 045-050)				
10	Cam ring 014	Hubring 014	Came 014	A	034-67469-0	1
	Anello camma 014	Aro volumetrico 014				
	Cam ring 017	Hubring 017	Came 017	A	034-67470-0	1
	Anello camma 017	Aro volumetrico 017				
	Cam ring 020	Hubring 020	Came 020	A	034-67159-0	1
	Anello camma 020	Aro volumetrico 020				
	Cam ring 022	Hubring 022	Came 022	A	034-67482-0	1
	Anello camma 022	Aro volumetrico 022				
	Cam ring 024	Hubring 024	Came 024	A	034-67158-0	1
	Anello camma 024	Aro volumetrico 024				
	Cam ring 028	Hubring 028	Came 028	A	034-67157-0	1
	Anello camma 028	Aro volumetrico 028				
	Cam ring 031	Hubring 031	Came 031	A	034-67156-0	1
	Anello camma 031	Aro volumetrico 031				
	Cam ring 035	Hubring 035	Came 035	A	034-67155-0	1
	Anello camma 035	Aro volumetrico 035				
	Cam ring 038	Hubring 038	Came 038	A	034-67154-0	1
	Anello camma 038	Aro volumetrico 038				
	Cam ring 042	Hubring 042	Came 042	A	034-67153-0	1
	Anello camma 042	Aro volumetrico 042				
	Cam ring 045	Hubring 045	Came 045	A	034-59131-0	1
	Anello camma 045	Aro volumetrico 045				
	Cam ring 050	Hubring 050	Came 050	A	034-66737-0	1
	Anello camma 050	Aro volumetrico 050				
11	Dowel pin	Zentrierstift	Goupille	A	324-21312-0	2
	Spina	Pasador				
12	Pin-vane holdout (Except cam rings 045 - 050)	Stössel (außer Hubringe 045-050)	Poussoir de palette (Excepté cames 045 - 050)	A	034-59098-0	12
	Pistoncino di sostentamento (Eccetto anello camma 045-050)	Espiga empuje paleta (Excepto los aros 045-050)				
	Pin-vane holdout (Only cam ring 045 - 050)	Stössel (nur Hubringe 045-050)	Poussoir de palette (Seul. cames 045-050)	A	034-59130-0	10
	Pistoncino di sostentamento (Solo anello camma 045-050)	Espiga empuje paleta (Solo los aros 045-050)				
13	Back-up ring	Stützring	Bague anti-extrusion	AC	618-00011-3	1
	Anello anti-estrusione	Anillo				
14	Sq. section seal	Dichtring	Joint section carrée	AC	691-10244-0	1
	Guarnizione	Junta seccion cuadrada				
15	Sq. section seal	Dichtring	Joint section carrée	AC	691-10238-0	1
	Guarnizione	Junta seccion cuadrada				
16	Retaining ring	Sicherungsring	Circlips		356-32283-0	1
	Anello elastico	Anillo de retención				
17	Ball bearing	Kugellager	Roulement à billes	DEFGH	230-00207-0	1
	Cuscinetto a sfere	Cojinete de bolas				
18a	Key (code 1)	Paßfeder (Typ 1)	Clavette (code 1)	D	034-46754-0	1
	Chiavetta (codice 1)	Chaveta (codigo 1)				
18b	Key (code 2)	Paßfeder (Typ 2)	Clavette (code 2)	E	034-49676-0	1
	Chiavetta (codice 2)	Chaveta (codigo 2)				

Parker Hannifin SAS
VPDE, Denison Vane Pumps
Vierzon - France

Item Pos. Réf. Pos. Pos.	Description Descrizione	Benennung Descripcion	Description		Part N° Teil Nr. Code N° Cod. N° Referencia	Qty Stück Qté Q.tà Cant.
18e	Key (code 5)	Paßfeder (Typ 5)	Clavette (code 5)	H	034-66980-0	1
	Chiavetta (codice 5)	Chaveta (codigo 5)				
19a	Shaft (keyed) (code1) (SAE C)	Welle für Paßfeder (Typ 1) (SAE C)	Arbre à clavette (code 1) (SAE C)	D	034-71363-0	1
	Albero a chiavetta (codice 1) (SAE C)	Eje chaveteado (codigo 1) (SAE C)				
19b	Shaft (keyed) (code 2)	Welle für Paßfeder (Typ 2)	Arbre à clavette (code 2)	E	034-71364-0	1
	Albero a chiavetta (codice 2)	Eje chaveteado (codigo 2)				
19c	Shaft (splined) (code 3) (SAE C)	Vielkeilwelle (Typ 3) (SAE C)	Arbre à cannelures (code 3) (SAE C)	F	034-71361-0	1
	Albero a scanalato (codice 3) (SAE C)	Eje estriado (codigo 3) (SAE C)				
19d	Shaft (splined) (code 4) (SAE C)	Vielkeilwelle (Typ 4) (SAE C)	Arbre à cannelures (code 4) (SAE C)	G	034-71362-0	1
	Albero scanalato (codice 4) (SAE C)	Eje estriado (codigo 4) (SAE C)				
19e	Shaft (splined) (code 5)	Vielkeilwelle (Typ 5)	Arbre à cannelures (code 5)	H	034-66578-0	1
	Albero scanalato (codice 5)	Eje estriado (codigo 5)				
20a	Shaft seal (S1 - 0,7 bar)	Simmerring (S1 - 0,7 bar)	Joint d'arbre (S1 - 0,7 bar)	C	620-82062-0	1
	Paraolio (S1 - 0,7 bar)	Reten eje (S1 - 0,7 bar)				
	Shaft seal (S4 - S5 - 7 bar)	Simmerring (S4 - S5 - 7 bar)	Joint d'arbre (S4 - S5 - 7 bar)	C	620-82066-0	1
	Paraolio (S4 - S5 - 7 bar)	Reten eje (S4 - S5 - 7 bar)				
20b	Shaft seal (S1 - 0,7 bar)	Simmerring (S1 - 0,7 bar)	Joint d'arbre (S1 - 0,7 bar)	C	620-82064-0	1
	Paraolio (S1 - 0,7 bar)	Reten eje (S1 - 0,7 bar)				
	Shaft seal (S4 - S5 - 7 bar)	Simmerring (S4 - S5 - 7 bar)	Joint d'arbre (S4 - S5 - 7 bar)	C	620-82072-0	1
	Paraolio (S4 - S5 - 7 bar)	Reten eje (S4 - S5 - 7 bar)				
21	Round section ring	Sicherungsring	Anneau	DEFGH	034-70853-0	2
	Anello elastico	Anillo tórico				
22a	Mounting cap (metric)	Deckel (Metrisch)	Chapeau de montage (métrique)		034-71328-0	1
	Coperchio (metrica)	Tapa de montage 1" (metrico)				
	Mounting cap (UNC)	Deckel (UNC)	Chapeau de montage (UNC)		034-48135-0	1
	Coperchio (UNC)	Tapa de montage (UNC)				
22b	Mounting cap (metric)	Deckel (Metrisch)	Chapeau de montage (métrique)		034-66748-0	1
	Coperchio (metrica)	Tapa de montage 1" (metrico)				
	Mounting cap (UNC)	Deckel (UNC)	Chapeau de montage (UNC)		034-66495-0	1
	Coperchio (UNC)	Tapa de montage (UNC)				
23	Port plate-pressure (Except cam rings 045 - 050)	Steuerplatte (außer Hubringe 045-050)	Plaque pression (Excepté cames 045 - 050)	A	034-67479-0	1
	Piatto distributore anter. (Eccetto anello camma 045-050)	Plato distribuidor-presión (Excepto los aros 045-050)				
	Port plate-pressure C.C.W. (Only cam rings 045 - 050)	Steuerplatte Linkslauf (nur Hubringe 045-050)	Plaque press. rot. G. (Seul. cames 045-050)	A	034-67113-0	1
	Piatto distributore anter.antioraria (Solo anello camma 045-050)	Plato distribuidor-presión giro I (Solo los aros 045-050)				
	Port plate-pressure C.W. (Only cam rings 045 - 050)	Steuerplatte Rechtslauf (nur Hubringe 045-050)	Plaque press. rot. D. (Seul. cames 045-050)	A	034-67111-0	1
	Piatto distributore anter. Oraria (Solo anello camma 045-050)	Plato distribuidor-presión giro D (Solo los aros 045-050)				
24	Rotor ass'y (Except cam rings 045 - 050)	Rotor (außer Hubringe 045-050)	Rotor ass. (Excepté cames 045 - 050)	A	S24-73783-0	1
	Insieme rotore (Eccetto anello camma 045-050)	Conjunto rotor Excepto los aros 045-050)				
	Rotor ass'y (Only cam ring 045 - 050)	Rotor (nur Hubringe 045-050)	Rotor ass. (Seul. cames 045-050)	A	S24-10121-0	1
	Insieme rotore (Solo anello camma 045-050)	Conjunto rotor (Solo los aros 045-050)				
25	Vane (Except cam rings 045 - 050)	Flügel (außer Hubringe 045-050)	Palette (Excepté cames 045 - 050)	A	034-67453-0	12
	Paletta (Eccetto anello camma 045-050)	Paleta (Excepto los aros 045-050)				
	Vane (Only cam ring 045 - 050)	Flügel (nur Hubringe 045-050)	Palette (Seul. cames 045-050)	A	034-53588-0	10
	Paletta (Solo anello camma 045-050)	Paleta (Solo los aros 045-050)				
26	Sq. section seal	Dichtring	Joint section carrée	C	671-10159-0	1
	Guarnizione	Junta seccion cuadrada				
27	Housing (standard) (metric)	Gehäuse (Standard) (Metrisch)	Carter (standard) (métrique)		034-71326-0	1
	Corpo (standard) (metrico)	Cuerpo (estándar) (metrica)				
	Housing (standard) (UNC)	Gehäuse (Standard) (UNC)	Carter (standard) (UNC)		034-48133-0	1
	Corpo (standard) (UNC)	Cuerpo (estándar) (UNC)				

Item Pos. Réf. Pos. Pos.	Description Descrizione	Benennung Descripcion	Description		Part N° Teil Nr. Code N° Cod. N° Referencia	Qty Stück Qté Q.tà Cant.
28	Dowel pin	Zentrierstift	Goupille	AJKL	323-82004-0	1
	Spina	Pasador				
29	Dowel pin	Zentrierstift	Goupille	BMN	323-82010-0	1
	Spina	Pasador				
30	Rotor ass'y	Rotor	Rotor ass.	B	S24-10116-0	1
	Insieme rotore	Conjunto rotor				
31	Pin-vane holdout	Stössel	Poussoir de palette	B	034-59098-0	10
	Pistoncino di sostentamento	Espiga empuje paleta				
32	Vane	Flügel	Palette	B	034-59099-0	10
	Paletta	Paleta				
33	Dowel pin	Zentrierstift	Goupille	B	324-21208-0	2
	Spina	Pasador				
34	Sq. section seal	Dichtring	Joint section carrée	BC	671-10156-0	1
	Guarnizione	Junta seccion cuadrada				
35	Screw	Schraube	Vis		306-40111-0	7
	Vite	Tornille				
36	Screw	Schraube	Vis	B	317-06266-0	2
	Vite	Tornille				
37	Screw	Schraube	Vis	A	317-10300-3	2
	Vite	Tornille				
38	Screw	Schraube	Vis		306-40156-0	4
	Vite	Tornille				
	REPAIR KIT	**AUSTAUSCH-BAUGRUPPEN**	**POCHETTES RECHANGES**			
	KIT DI RICAMBIO	**CUNJUNTO REPARACION**				
A	**Cart. and plate ass'y B14 C.W. (P1)**	**Pumpeneinheit B14 Rechtslauf (P1)**	**Cart. et plaque ass. B14 rot. d. (P1)**		**S24-76963-***	**1**
	Ins. cart. B14 oraria (P1)	**Conjunto cart. y platos B14 giro d. (P1)**				
A	**Cart. and plate ass'y B14 C.C.W. (P1)**	**Pumpeneinheit B14 Linkslauf (P1)**	**Cart. et plaque ass. B14 rot. g. (P1)**		**S24-76964-***	**1**
	Ins. cart. B14 antioraria (P1)	**Conjunto cart. y platos B14 giro i. (P1)**				
A	**Cart. and plate ass'y B17 C.W. (P1)**	**Pumpeneinheit B17 Rechtslauf (P1)**	**Cart. et plaque ass. B17 rot. d. (P1)**		**S24-76965-***	**1**
	Ins. cart. B17 oraria (P1)	**Conjunto cart. y platos B17 giro d. (P1)**				
A	**Cart. and plate ass'y B17 C.C.W. (P1)**	**Pumpeneinheit B17 Linkslauf (P1)**	**Cart. et plaque ass. B17 rot. g. (P1)**		**S24-76966-***	**1**
	Ins. cart. B17 antioraria (P1)	**Conjunto cart. y platos B17 giro i. (P1)**				
A	**Cart. and plate ass'y B20 C.W. (P1)**	**Pumpeneinheit B20 Rechtslauf (P1)**	**Cart. et plaque ass. B20 rot. d. (P1)**		**S24-76967-***	**1**
	Ins. cart. B20 oraria (P1)	**Conjunto cart. y platos B20 giro d. (P1)**				
A	**Cart. and plate ass'y B20 C.C.W. (P1)**	**Pumpeneinheit B20 Linkslauf (P1)**	**Cart. et plaque ass. B20 rot. g. (P1)**		**S24-76968-***	**1**
	Ins. cart. B20 antioraria (P1)	**Conjunto cart. y platos B20 giro i. (P1)**				
A	**Cart. and plate ass'y B22 C.W. (P1)**	**Pumpeneinheit B22 Rechtslauf (P1)**	**Cart. et plaque ass. B22 rot. d. (P1)**		**S24-76969-***	**1**
	Ins. cart. B22 oraria (P1)	**Conjunto cart. y platos B22 giro d. (P1)**				
A	**Cart. and plate ass'y B22 C.C.W. (P1)**	**Pumpeneinheit B22 Linkslauf (P1)**	**Cart. et plaque ass. B22 rot. g. (P1)**		**S24-76970-***	**1**
	Ins. cart. B22 antioraria (P1)	**Conjunto cart. y platos B22 giro i. (P1)**				
A	**Cart. and plate ass'y B24 C.W. (P1)**	**Pumpeneinheit B24 Rechtslauf (P1)**	**Cart. et plaque ass. B24 rot. d. (P1)**		**S24-76971-***	**1**
	Ins. cart. B24 oraria (P1)	**Conjunto cart. y platos B24 giro d. (P1)**				
A	**Cart. and plate ass'y B24 C.C.W. (P1)**	**Pumpeneinheit B24 Linkslauf (P1)**	**Cart. et plaque ass. B24 rot. g. (P1)**		**S24-76972-***	**1**
	Ins. cart. B24 antioraria (P1)	**Conjunto cart. y platos B24 giro i. (P1)**				

Parker Hannifin SAS
VPDE, Denison Vane Pumps
Vierzon - France

Item Pos. Réf. Pos. Pos.	Description Descrizione	Benennung Descripcion	Description		Part N° Teil Nr. Code N° Cod. N° Referencia	Qty Stück Qté Q.tà Cant.
A	Cart. and plate ass'y B28 C.W. (P1)	Pumpeneinheit B28 Rechtslauf (P1)	Cart. et plaque ass. B28 rot. d. (P1)		S24-76973-*	1
	Ins. cart. B28 oraria (P1)	Conjunto cart. y platos B28 giro d. (P1)				
A	Cart. and plate ass'y B28 C.C.W. (P1)	Pumpeneinheit B28 Linkslauf (P1)	Cart. et plaque ass. B28 rot. g. (P1)		S24-76974-*	1
	Ins. cart. B28 antioraria (P1)	Conjunto cart. y platos B28 giro i. (P1)				
A	Cart. and plate ass'y B31 C.W. (P1)	Pumpeneinheit B31 Rechtslauf (P1)	Cart. et plaque ass. B31 rot. d. (P1)		S24-76975-*	1
	Ins. cart. B31 oraria (P1)	Conjunto cart. y platos B31 giro d. (P1)				
A	Cart. and plate ass'y B31 C.C.W. (P1)	Pumpeneinheit B31 Linkslauf (P1)	Cart. et plaque ass. B31 rot. g. (P1)		S24-76976-*	1
	Ins. cart. B31 antioraria (P1)	Conjunto cart. y platos B31 giro i. (P1)				
A	Cart. and plate ass'y B35 C.W. (P1)	Pumpeneinheit B35 Rechtslauf (P1)	Cart. et plaque ass. B35 rot. d. (P1)		S24-76977-*	1
	Ins. cart. B35 oraria (P1)	Conjunto cart. y platos B35 giro d. (P1)				
A	Cart. and plate ass'y B35 C.C.W. (P1)	Pumpeneinheit B35 Linkslauf (P1)	Cart. et plaque ass. B35 rot. g. (P1)		S24-76978-*	1
	Ins. cart. B35 antioraria (P1)	Conjunto cart. y platos B35 giro i. (P1)				
A	Cart. and plate ass'y B38 C.W. (P1)	Pumpeneinheit B38 Rechtslauf (P1)	Cart. et plaque ass. B38 rot. d. (P1)		S24-76979-*	1
	Ins. cart. B38 oraria (P1)	Conjunto cart. y platos B38 giro d. (P1)				
A	Cart. and plate ass'y B38 C.C.W. (P1)	Pumpeneinheit B38 Linkslauf (P1)	Cart. et plaque ass. B38 rot. g. (P1)		S24-76980-*	1
	Ins. cart. B38 antioraria (P1)	Conjunto cart. y platos B38 giro i. (P1)				
A	Cart. and plate ass'y B42 C.W. (P1)	Pumpeneinheit B42 Rechtslauf (P1)	Cart. et plaque ass. B42 rot. d. (P1)		S24-76981-*	1
	Ins. cart. B42 oraria (P1)	Conjunto cart. y platos B42 giro d. (P1)				
A	Cart. and plate ass'y B42 C.C.W. (P1)	Pumpeneinheit B42 Linkslauf (P1)	Cart. et plaque ass. B42 rot. g. (P1)		S24-76982-*	1
	Ins. cart. B42 antioraria (P1)	Conjunto cart. y platos B42 giro i. (P1)				
A	Cart. and plate ass'y 045 C.W. (P1)	Pumpeneinheit 045 Rechtslauf (P1)	Cart. et plaque ass. 045 rot. d. (P1)		S24-10859-*	1
	Ins. cart. 045 oraria (P1)	Conjunto cart. y platos 045 giro d. (P1)				
A	Cart. and plate ass'y 045 C.C.W. (P1)	Pumpeneinheit 045 Linkslauf (P1)	Cart. et plaque ass. 045 rot. g. (P1)		S24-10860-*	1
	Ins. cart. 045 antioraria (P1)	Conjunto cart. y platos 045 giro i. (P1)				
A	Cart. and plate ass'y 050 C.W. (P1)	Pumpeneinheit 050 Rechtslauf (P1)	Cart. et plaque ass. 050 rot. d. (P1)		S24-40236-*	1
	Ins. cart. 050 oraria (P1)	Conjunto cart. y platos 050 giro d. (P1)				
A	Cart. and plate ass'y 050 C.C.W. (P1)	Pumpeneinheit 050 Linkslauf (P1)	Cart. et plaque ass. 050 rot. g. (P1)		S24-40237-*	1
	Ins. cart. 050 antioraria (P1)	Conjunto cart. y platos 050 giro i. (P1)				
B	Cart. and plate ass'y 003 C.W. (P2)	Pumpeneinheit 003 Rechtslauf (P2)	Cart. et plaque ass. 003 rot. d. (P2)		S24-10767-*	1
	Ins. cart. 003 oraria (P2)	Conjunto cart. y platos 003 giro d. (P2)				
B	Cart. and plate ass'y 003 C.C.W. (P2)	Pumpeneinheit 003 Linkslauf (P2)	Cart. et plaque ass. 003 rot. g. (P2)		S24-10768-*	1
	Ins. cart. 003 antioraria (P2)	Conjunto cart. y platos 003 giro i. (P2)				
B	Cart. and plate ass'y 005 C.W. (P2)	Pumpeneinheit 005 Rechtslauf (P2)	Cart. et plaque ass. 005 rot. d. (P2)		S24-10769-*	1
	Ins. cart. 005 oraria (P2)	Conjunto cart. y platos 005 giro d. (P2)				
B	Cart. and plate ass'y 005 C.C.W. (P2)	Pumpeneinheit 005 Linkslauf (P2)	Cart. et plaque ass. 005 rot. g. (P2)		S24-10770-*	1
	Ins. cart. 005 antioraria (P2)	Conjunto cart. y platos 005 giro i. (P2)				
B	Cart. and plate ass'y 006 C.W. (P2)	Pumpeneinheit 006 Rechtslauf (P2)	Cart. et plaque ass. 006 rot. d. (P2)		S24-10771-*	1
	Ins. cart. 006 oraria (P2)	Conjunto cart. y platos 006 giro d. (P2)				
B	Cart. and plate ass'y 006 C.C.W. (P2)	Pumpeneinheit 006 Linkslauf (P2)	Cart. et plaque ass. 006 rot. g. (P2)		S24-10772-*	1
	Ins. cart. 006 antioraria (P2)	Conjunto cart. y platos 006 giro i. (P2)				
B	Cart. and plate ass'y 008 C.W. (P2)	Pumpeneinheit 008 Rechtslauf (P2)	Cart. et plaque ass. 008 rot. d. (P2)		S24-10773-*	1
	Ins. cart. 008 oraria (P2)	Conjunto cart. y platos 008 giro d. (P2)				
B	Cart. and plate ass'y 008 C.C.W. (P2)	Pumpeneinheit 008 Linkslauf (P2)	Cart. et plaque ass. 008 rot. g. (P2)		S24-10774-*	1
	Ins. cart. 008 antioraria (P2)	Conjunto cart. y platos 008 giro i. (P2)				
B	Cart. and plate ass'y 010 C.W. (P2)	Pumpeneinheit 010 Rechtslauf (P2)	Cart. et plaque ass. 010 rot. d. (P2)		S24-10775-*	1
	Ins. cart. 010 oraria (P2)	Conjunto cart. y platos 010 giro d. (P2)				
B	Cart. and plate ass'y 010 C.C.W. (P2)	Pumpeneinheit 010 Linkslauf (P2)	Cart. et plaque ass. 010 rot. g. (P2)		S24-10776-*	1
	Ins. cart. 010 antioraria (P2)	Conjunto cart. y platos 010 giro i. (P2)				
B	Cart. and plate ass'y 012 C.W. (P2)	Pumpeneinheit 012 Rechtslauf (P2)	Cart. et plaque ass. 012 rot. d. (P2)		S24-26480-*	1
	Ins. cart. 012 oraria (P2)	Conjunto cart. y platos 012 giro d. (P2)				

Parker Hannifin SAS
VPDE, Denison Vane Pumps
Vierzon - France

Item Pos. Réf. Pos. Pos.	Description Descrizione	Benennung Descripcion	Description		Part N° Teil Nr. Code N° Cod. N° Referencia	Qty Stück Qté Q.tà Cant.
B	Cart. and plate ass'y 012 C.C.W. (P2)	Pumpeneinheit 012 Linkslauf (P2)	Cart. et plaque ass. 012 rot. g. (P2)		S24-26481-*	1
	Ins. cart. 012 antioraria (P2)	Conjunto cart. y platos 012 giro i. (P2)				
B	Cart. and plate ass'y 014 C.W. (P2)	Pumpeneinheit 014 Rechtslauf (P2)	Cart. et plaque ass. 014 rot. d. (P2)		S24-10777-*	1
	Ins. cart. 014 oraria (P2)	Conjunto cart. y platos 014 giro d. (P2)				
B	Cart. and plate ass'y 014 C.C.W. (P2)	Pumpeneinheit 014 Linkslauf (P2)	Cart. et plaque ass. 014 rot. g. (P2)		S24-10778-*	1
	Ins. cart. 014 antioraria (P2)	Conjunto cart. y platos 014 giro i. (P2)				
B	Cart. and plate ass'y 017 C.W. (P2)	Pumpeneinheit 017 Rechtslauf (P2)	Cart. et plaque ass. 017 rot. d. (P2)		S24-10779-*	1
	Ins. cart. 017 oraria (P2)	Conjunto cart. y platos 017 giro d. (P2)				
B	Cart. and plate ass'y 017 C.C.W. (P2)	Pumpeneinheit 017 Linkslauf (P2)	Cart. et plaque ass. 017 rot. g. (P2)		S24-10780-*	1
	Ins. cart. 017 antioraria (P2)	Conjunto cart. y platos 017 giro i. (P2)				
B	Cart. and plate ass'y 020 C.W. (P2)	Pumpeneinheit 020 Rechtslauf (P2)	Cart. et plaque ass. 020 rot. d. (P2)		S24-40234-*	1
	Ins. cart. 020 oraria (P2)	Conjunto cart. y platos 020 giro d. (P2)				
B	Cart. and plate ass'y 020 C.C.W. (P2)	Pumpeneinheit 020 Linkslauf (P2)	Cart. et plaque ass. 020 rot. g. (P2)		S24-40235-*	1
	Ins. cart. 020 antioraria (P2)	Conjunto cart. y platos 020 giro i. (P2)				
B	Cart. and plate ass'y 022 C.W. (P2)	Pumpeneinheit 022 Rechtslauf (P2)	Cart. et plaque ass. 022 rot. d. (P2)		S24-10781-*	1
	Ins. cart. 022 oraria (P2)	Conjunto cart. y platos 022 giro d. (P2)				
B	Cart. and plate ass'y 022 C.C.W. (P2)	Pumpeneinheit 022 Linkslauf (P2)	Cart. et plaque ass. 022 rot. g. (P2)		S24-10782-*	1
	Ins. cart. 022 antioraria (P2)	Conjunto cart. y platos 022 giro i. (P2)				
B	Cart. and plate ass'y 025 C.W. (P2)	Pumpeneinheit 025 Rechtslauf (P2)	Cart. et plaque ass. 025 rot. d. (P2)		S24-10783-*	1
	Ins. cart. 025 oraria (P2)	Conjunto cart. y platos 025 giro d. (P2)				
B	Cart. and plate ass'y 025 C.C.W. (P2)	Pumpeneinheit 025 Linkslauf (P2)	Cart. et plaque ass. 025 rot. g. (P2)		S24-10784-*	1
	Ins. cart. 025 antioraria (P2)	Conjunto cart. y platos 025 giro i. (P2)				
B	Cart. and plate ass'y 028 C.W. (P2)	Pumpeneinheit 028 Rechtslauf (P2)	Cart. et plaque ass. 028 rot. d. (P2)		S24-97722-*	1
	Ins. cart. 028 oraria (P2)	Conjunto cart. y platos 028 giro d. (P2)				
B	Cart. and plate ass'y 028 C.C.W. (P2)	Pumpeneinheit 028 Linkslauf (P2)	Cart. et plaque ass. 028 rot. g. (P2)		S24-25791-*	1
	Ins. cart. 028 antioraria (P2)	Conjunto cart. y platos 028 giro i. (P2)				
B	Cart. and plate ass'y 031 C.W. (P2)	Pumpeneinheit 031 Rechtslauf (P2)	Cart. et plaque ass. 031 rot. d. (P2)		S24-45789-*	1
	Ins. cart. 031 oraria (P2)	Conjunto cart. y platos 031 giro d. (P2)				
B	Cart. and plate ass'y 031 C.C.W. (P2)	Pumpeneinheit 031 Linkslauf (P2)	Cart. et plaque ass. 031 rot. g. (P2)		S24-45790-*	1
	Ins. cart. 031 antioraria (P2)	Conjunto cart. y platos 031 giro i. (P2)				
C	Seal kit (S1 - 0,7 bar)	Dichtringsatz (S1 - 0,7 bar)	Pochette de joint (S1 - 0,7 bar)		S24-10170-0	1
	Serie guarnizioni (S1 - 0,7 bar)	Juego de juntas (S1 - 0,7 bar)				
C	Seal kit (S4 - 7 bar)	Dichtringsatz (S4 - 7 bar)	Pochette de joint (S4 - 7 bar)		S24-10170-4	1
	Serie guarnizioni (S4 - 7 bar)	Juego de juntas (S4 - 7 bar)				
C	Seal kit (S5 - 7 bar)	Dichtringsatz (S5 - 7 bar)	Pochette de joint (S5 - 7 bar)		S24-10170-5	1
	Serie guarnizioni (S5 - 7 bar)	Juego de juntas (S5 - 7 bar)				
D	Shaft and bearing ass'y (code 1)	Baugruppe (Welle u. Lager) (Typ 1)	Arbre et roulement ass. (code 1)		S14-42520-0	1
	Ins. albero (codice 1)	Conjunto eje cojinete (codigo 1)				
E	Shaft and bearing ass'y (code 2)	Baugruppe (Welle u. Lager) (Typ 2)	Arbre et roulement ass. (code 2)		S14-42521-0	1
	Ins. albero (codice 2)	Conjunto eje cojinete (codigo 2)				
F	Shaft and bearing ass'y (code 3)	Baugruppe (Welle u. Lager) (Typ 3)	Arbre et roulement ass. (code 3)		S14-42518-0	1
	Ins. albero (codice 3)	Conjunto eje cojinete (codigo 3)				
G	Shaft and bearing ass'y (code 4)	Baugruppe (Welle u. Lager) (Typ 4)	Arbre et roulement ass. (code 4)		S14-42519-0	1
	Ins. albero (codice 4)	Conjunto eje cojinete (codigo 4)				
H	Shaft and bearing ass'y (code 5)	Baugruppe (Welle u. Lager) (Typ 5)	Arbre et roulement ass. (code 5)		S24-26206-0	1
	Ins. albero (codice 5)	Conjunto eje cojinete (codigo 5)				
J	Port plate rear and bush ass'y (P1)	Steuerplatte mit buchse (P1)	Plaque arr. et bague ass. (P1)		S24-76916-0	1
	(Except cam rings 045-050)	(außer Hubringe 045-050)	(Excepté cames 045-050)			
	Ins. piatto dist. post. (P1)	Conj. plato dist. tras. con coj. fricción (P1)				
	(Eccetto anello camma 045-050)	(Excepto los aros 045-050)				

Parker Hannifin SAS
VPDE, Denison Vane Pumps
Vierzon - France

Item Pos. Réf. Pos. Pos.	Description Descrizione	Benennung Descripcion	Description		Part N° Teil Nr. Code N° Cod. N° Referencia	Qty Stück Qté Q.tà Cant.
K	Port plate rear ass'y C.W. (P1) (Only cam ring 045 - 050) Ins. piatto dist. post. Oraria (P1) (Solo anello camma 045-050)	Steuerplatte Rechtslauf (P1) (nur Hubringe 045-050) Conj. plato dist. trasero giro D (P1) (Solo los aros 045-050)	Plaque arrière ass. rot. droite (P1) (Seulement cames 045-050)		S24-63950-0	1
L	Port plate rear ass'y C.C.W. (P1) (Only cam ring 045 - 050) Ins. piatto dist. post. Antioraria (P1) (Solo anello camma 045-050)	Steuerplatte Linkslauf (P1) (nur Hubringe 045-050) Conj. plato dist. trasero giro I (P1) (Solo los aros 045-050)	Plaque arrière ass. rot. gauche (P1) (Seulement cames 045-050)		S24-63951-0	1
M	Port plate rear ass'y C.C.W. (P2) Ins. piatto distributore post. Antioraria (P2)	Steuerplatte Linkslauf (P2) Conj. plato dist. trasero giro I (P2)	Plaque arrière ass. rot. gauche (P2)		S24-10810-0	1
N	Port plate rear ass'y C.W. (P2) Ins. piatto distributore post. Oraria (P2)	Steuerplatte Rechtslauf (P2) Conj. plato dist. trasero giro D (P2)	Plaque arrière ass. rot. droite (P2)		S24-10809-0	1
	Seal class Tipo di guarnizioni	Dichtringsatz Clase de juntas	Classe de joint	S**-*****-* =		
				S1 BUNA N S**-*****-0		
				S4 EPDM S**-*****-4		
				S5 VITON® S**-*****-5		

Parker Hannifin SAS
VPDE, Denison Vane Pumps
Vierzon - France

Model Code — Typenschlüssel — Désignation - type

Model number — **Typenbezeichnung :** — **Numéro du modèle :**

T67DC W . - B42 - 010 - 1 R 00 - A 1 M1 - ..

T67DC series - SAE C - 2 bolts
Mounting flange J744
— **Baureihe T67DC** - SAE C 2-Loch
Montageflansch, J744
— **Série T67DC** - SAE C 2 trous
Bride de montage J744

Sever duty shaft — **Hochleistungswelle** — **Arbre renforcé**

One letter can be added to specify special parts in series — Optionen — Une lettre peut être ajoutée pour spécifier les pièces spéciales dans la série.

Cam ring P1 — Hubring P1 — **Came P1**
(Volumetric displacement) (ml/rev.) — (Geometrisches Fördervolumen) (cm^3/U) — (Cylindrée théorique) (cm^3/tr)
B14 = 43,2 — B24 = 79,6 — B38 = 118,5
B17 = 54,0 — B28 = 88,4 — B42 = 135,3
B20 = 64,8 — B31 = 97,4 — 045 = 145,7
B22 = 70,3 — B35 = 111,4 — 050 = 158,0

Cam ring P2 — **Hubring P2** — **Came P2**
(Volumetric displacement) (ml/rev.) — (Geometrisches Fördervolumen) (cm^3/U) — (Cylindrée théorique) (cm^3/tr)
003 = 10,8 — 012 = 37 ,1 — 022 = 70,3
005 = 17,2 — 014 = 46,0 — 025 = 79,3
006 = 21,3 — 017 = 58,3 — 028 = 88,8
008 = 26,4 — 020 = 63,8 — 031 = 100,0
010 = 34,1

Type of shaft T67DC — **Art der Welle T67DC** — **Type d'arbre T67DC**
1 = keyed (SAE C) — 1 = Paßfederwelle (SAE C) — 1 = à clavette (SAE C)
2 = keyed (non SAE) — 2 = Paßfederwelle (nicht SAE) — 2 = à clavette (non SAE)
3 = splined 12/24 (SAE C) — 3 = Vielkeilwelle 12/24 (SAE C) — 3 = à cannelures 12/24 (SAE C)
4 = splined 12/24 (spec. SAE C) — 4 = Vielkeilwelle 12/24 (spec. SAE C) — 4 = à cannelures 12/24 (spec. SAE C)

Sever duty shaft (T67DCW only) — **Hochleistungswelle (nur für T67DCW)** — **Arbre renforcé (T67DCW seulement)**
5 = keyed (non SAE) — 5 = Paßfederwelle (nicht SAE) — 5 = à clavette (non SAE)

Direction of rotation — **Drehrichtung** — **Sens de rotation**
R = Clockwise — R = Rechtslauf — R = à droite
L = Counter-clockwise — L = Linkslauf — L = à gauche

Porting combination — **Lage der Anschlüsse** — **Combinaison des orifices**
00 = standard — 00 = standard — 00 = standard

Design letter — **Ausführungsbuchstabe** — **Conception**

Seal class — **Dichtungsklasse** — **Classe de joint**
1 = S1 - BUNA N — 1 = S1 - BUNA N — 1 = S1 - BUNA N
4 = S4 - EPDM — 4 = S4 - EPDM — 4 = S4 - EPDM
5 = S5 - VITON — 5 = S5 - VITON — 5 = S5 - VITON

Mounting w/connection variables — **Gehäuse-Anschlußgröße** — **Option sur orifices**

4 bolts SAE flanges (J518)

	P1 = 1"1/4 - S = 3"	
	UNC	Metric
T67DC P2 = 1"	00	M0
T67DC P2 = 3/4"	01	M1

SAE-Vierlochflansch (J518)

	P1 = 1"1/4 - S = 3"	
	UNC	Metrisches
T67DC P2 = 1"	00	M0
T67DC P2 = 3/4"	01	M1

Bride SAE 4 trous (J518)

	P1 = 1"1/4 - S = 3"	
	UNC	Métrique
T67DC P2 = 1"	00	M0
T67DC P2 = 3/4"	01	M1

Modifications — **Modifikationen** — **Modifications**

Designazione

Sigla :

Serie T67DC - SAE C 2 fori
Flangia di montaggio J744

Albero per impiego gravoso

Una lettera può essere aggiunta per specificare parti speciali nella serie

Tipo di cartuccia P1
(Cylindrata) (ml/giro)
B14 = 43,2
B17 = 54,0
B20 = 64,8
B22 = 70,3
B24 = 79,6
B28 = 88,4

Tipo di cartuccia P2
(Cylindrata) (ml/giro)
003 = 10,8
005 = 17,2
006 = 21,3
008 = 26,4
010 = 34,1
012 = 37 ,1
014 = 46,0

Tipo di albero T67DC
1 = a chiavetta (SAE C)
2 = a chiavetta
3 = scanalato 12/24 (SAE C)
4 = scanalato 12/24 (spec. SAE C)

Albero per impiego gravoso (solo per T67DCW)
5 = a chiavetta

Senso di rotazione
R = Orario
L = Antiorario

Orientamento delle bocche
00 = standard

Disegno

Tipo di guarnizioni
1 = S1 - BUNA N
4 = S4 - EPDM
5 = S5 - VITON

Dimensioni delle bocche
Flangia SAE 4 drenaggio (J518)

	P1 = 1"1/4 - S = 3"	
	UNC	Metrica
T67DC P2 = 1"	00	M0
T67DC P2 = 3/4"	01	M1

Modifiche

Clave de designación

Referencia modelo :

T67DC W . - B42 - B10 - 1 R 00 - A 1 M1 - ..

Serie T67DC - SAE C 2 taladros
Brida de montaje J744

Eje trabajo duro

Una letra puede ser añadide pasa especificar piezas especiales en la serie

Aro volumetrico P1
(Cilindrada) (ml/rev)
B31 = 97,4
B35 = 111,4
B38 = 118,5
B42 = 135,3
045 = 145,7
050 = 158,0

Aro volumetrico P2
(Cilindrada) (ml/rev)
017 = 58,3
020 = 63,8
022 = 70,3
025 = 79,3
028 = 88,8
031 = 100,0

Tipo de eje T67DC
1 = chaveteado (SAE C)
2 = chaveteado (no SAE)
3 = estriado 12/24 (SAE C)
4 = estriado 12/24 (spec. SAE C)

Eje trabajo duro (solo T67DCW)
5 = chaveteado (no SAE)

Sentido de giro
R = Derecha
L = Izquierda

Posición de bocas
00 = estándar

Letra de diseño

Clase de juntas
1 = S1 - BUNA N
4 = S4 - EPDM
5 = S5 - VITON

Opciones de las bocas
Brida SAE 4 taladros (J518)

	P1 = 1"1/4 - S = 3"	
	UNC	Metrico
T67DC P2 = 1"	00	M0
T67DC P2 = 3/4"	01	M1

Modificaciones

WARNING — USER RESPONSIBILITY

FAILURE OR IMPROPER SELECTION OR IMPROPER USE OF THE PRODUCTS DESCRIBED HEREIN OR RELATED ITEMS CAN CAUSE DEATH, PERSONAL INJURY AND PROPERTY DAMAGE.

- This document and other information from Parker-Hannifin Corporation, its subsidiaries and authorized distributors provide product or system options for further investigation by users having technical expertise.

- The user, through its own analysis and testing, is solely responsible for making the final selection of the system and components and assuring that all performance, endurance, maintenance, safety and warning requirements of the application are met. The user must analyze all aspects of the application, follow applicable industry standards, and follow the information concerning the product in the current product catalog and in any other materials provided from Parker or its subsidiaries or authorized distributors.

- To the extent that Parker or its subsidiaries or authorized distributors provide component or system options based upon data or specifications provided by the user, the user is responsible for determining that such data and specifications are suitable and sufficient for all applications and reasonably foreseeable uses of the components or systems.

Offer of Sale

Please contact your Parker representation for a detailed ”Offer of Sale”.

Parker Hannifin SAS
VPDE, Denison Vane Pumps
Vierzon - France

Parker Worldwide

Europe, Middle East, Africa

AE – United Arab Emirates,
Dubai
Tel: +971 4 8127100
parker.me@parker.com

AT – Austria, Wiener Neustadt
Tel: +43 (0)2622 23501-0
parker.austria@parker.com

AT – Eastern Europe, Wiener Neustadt
Tel: +43 (0)2622 23501 900
parker.easteurope@parker.com

AZ – Azerbaijan, Baku
Tel: +994 50 2233 458
parker.azerbaijan@parker.com

BE/LU – Belgium, Nivelles
Tel: +32 (0)67 280 900
parker.belgium@parker.com

BY – Belarus, Minsk
Tel: +375 17 209 9399
parker.belarus@parker.com

CH – Switzerland, Etoy
Tel: +41 (0)21 821 87 00
parker.switzerland@parker.com

CZ – Czech Republic, Klecany
Tel: +420 284 083 111
parker.czechrepublic@parker.com

DE – Germany, Kaarst
Tel: +49 (0)2131 4016 0
parker.germany@parker.com

DK – Denmark, Ballerup
Tel: +45 43 56 04 00
parker.denmark@parker.com

ES – Spain, Madrid
Tel: +34 902 330 001
parker.spain@parker.com

FI – Finland, Vantaa
Tel: +358 (0)20 753 2500
parker.finland@parker.com

FR – France, Contamine s/Arve
Tel: +33 (0)4 50 25 80 25
parker.france@parker.com

GR – Greece, Athens
Tel: +30 210 933 6450
parker.greece@parker.com

HU – Hungary, Budapest
Tel: +36 1 220 4155
parker.hungary@parker.com

IE – Ireland, Dublin
Tel: +353 (0)1 466 6370
parker.ireland@parker.com

IT – Italy, Corsico (MI)
Tel: +39 02 45 19 21
parker.italy@parker.com

KZ – Kazakhstan, Almaty
Tel: +7 7272 505 800
parker.easteurope@parker.com

NL – The Netherlands, Oldenzaal
Tel: +31 (0)541 585 000
parker.nl@parker.com

NO – Norway, Asker
Tel: +47 66 75 34 00
parker.norway@parker.com

PL – Poland, Warsaw
Tel: +48 (0)22 573 24 00
parker.poland@parker.com

PT – Portugal, Leca da Palmeira
Tel: +351 22 999 7360
parker.portugal@parker.com

RO – Romania, Bucharest
Tel: +40 21 252 1382
parker.romania@parker.com

RU – Russia, Moscow
Tel: +7 495 645-2156
parker.russia@parker.com

SE – Sweden, Spånga
Tel: +46 (0)8 59 79 50 00
parker.sweden@parker.com

SK – Slovakia, Banská Bystrica
Tel: +421 484 162 252
parker.slovakia@parker.com

SL – Slovenia, Novo Mesto
Tel: +386 7 337 6650
parker.slovenia@parker.com

TR – Turkey, Istanbul
Tel: +90 216 4997081
parker.turkey@parker.com

UA – Ukraine, Kiev
Tel +380 44 494 2731
parker.ukraine@parker.com

UK – United Kingdom, Warwick
Tel: +44 (0)1926 317 878
parker.uk@parker.com

ZA – South Africa, Kempton Park
Tel: +27 (0)11 961 0700
parker.southafrica@parker.com

North America

CA – Canada, Milton, Ontario
Tel: +1 905 693 3000

US – USA, Cleveland
(industrial)
Tel: +1 216 896 3000

US – USA, Elk Grove Village
(mobile)
Tel: +1 847 258 6200

Asia Pacific

AU – Australia, Castle Hill
Tel: +61 (0)2-9634 7777

CN – China, Shanghai
Tel: +86 21 2899 5000

HK – Hong Kong
Tel: +852 2428 8008

IN – India, Mumbai
Tel: +91 22 6513 7081-85

JP – Japan, Fujisawa
Tel: +81 (0)4 6635 3050

KR – South Korea, Seoul
Tel: +82 2 559 0400

MY – Malaysia, Shah Alam
Tel: +60 3 7849 0800

NZ – New Zealand, Mt Wellington
Tel: +64 9 574 1744

SG – Singapore
Tel: +65 6887 6300

TH – Thailand, Bangkok
Tel: +662 717 8140

TW – Taiwan, Taipei
Tel: +886 2 2298 8987

South America

AR – Argentina, Buenos Aires
Tel: +54 3327 44 4129

BR – Brazil, Cachoeirinha RS
Tel: +55 51 3470 9144

CL – Chile, Santiago
Tel: +56 2 623 1216

MX – Mexico, Apodaca
Tel: +52 81 8156 6000

Ed. 2011-07-07

© 2011 Parker Hannifin Corporation. All rights reserved.

Catalogue HY29-0087-M1/EU, XM, 09/2011, PC

EMEA Product Information Centre
Free phone: 00 800 27 27 5374
(from AT, BE, CH, CZ, DE, DK, EE, ES, FI, FR, IE, IL, IS, IT, LU, MT, NL, NO, PL, PT, RU, SE, SK, UK, ZA)

US Product Information Centre
Toll-free number: 1-800-27 27 537

www.parker.com

Your local authorized Parker distributor