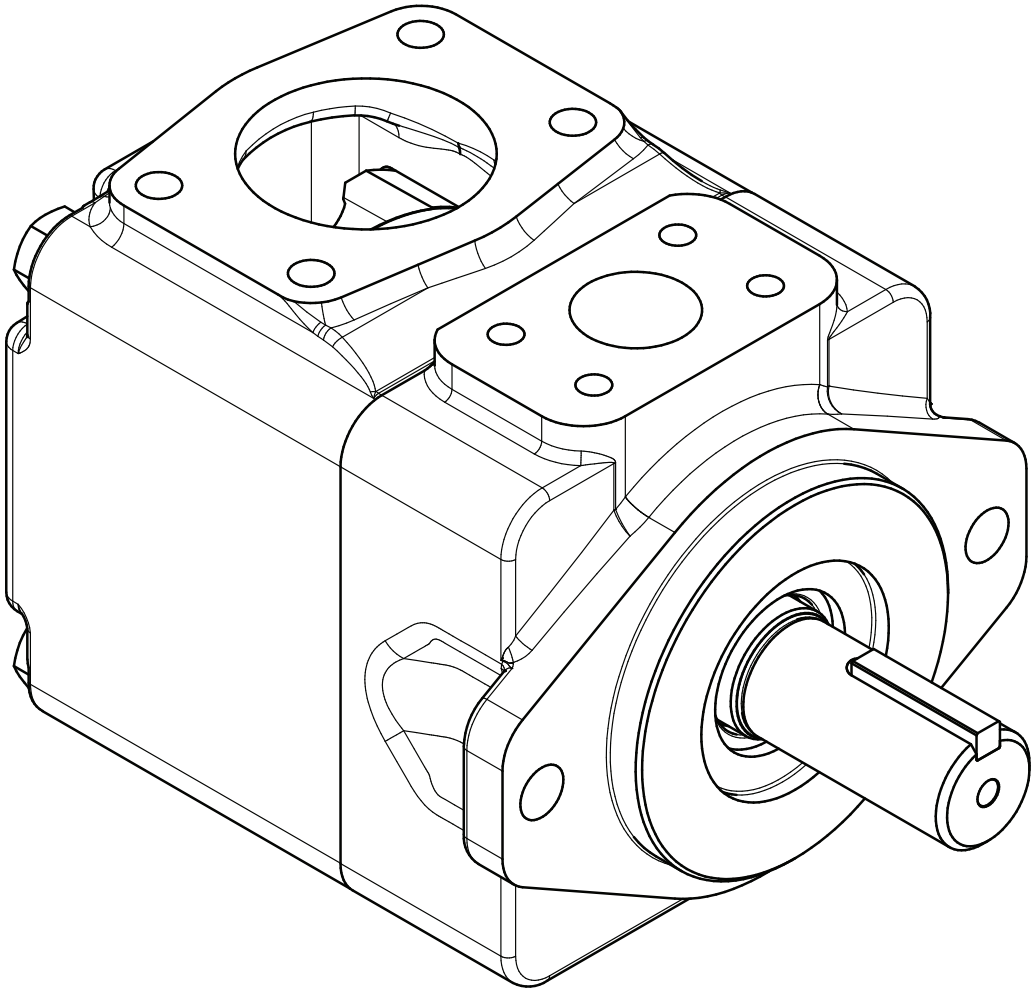

Hydraulic Pumps - Service Information
T7E - T7ES

Denison Vane Technology

Parker

ENGINEERING YOUR SUCCESS.

Model No. T7E or T7ES - 072 - 1 R 00 - A 1 - M0 - ..

T7E series - 125 A2 HW
ISO 2 bolts 3019-2 mounting flange
T7ES series - SAE C 2 bolts
J744 mounting flange

Displacement
Volumetric displacement (ml/rev.)

042 = 132,3	054 = 171,0	066 = 213,3
045 = 142,4	057 = 183,3	072 = 227,1
050 = 158,5	062 = 196,7	085 = 268,7
052 = 164,8		

Type of shaft T7ES
1 = keyed (SAE CC)
2 = keyed (non SAE)
3 = splined (SAE C) 14 teeth
4 = splined (SAE CC) 17 teeth

Type of shaft T7E - T7ES
5 = keyed (ISO R775)

Direction of rotation (shaft end view)
R = Clockwise
L = Counter-clockwise

Modifications

Mounting w/connection variables
4 bolts SAE flange J518

	P = 1.1/2" - S = 3"	
	Metric thread	UNC thread
T7E	M0	
T7ES	M0	00

Seal class
1 = S1 BUNA N - 0,7 bar max. (for mineral oil)
4 = S4 EPDM - 7 bar max. (for fire resistant fluids)
5 = S5 VITON® - 7 bar max. (for mineral oil and fire resistant fluids)

Design letter

Porting combination
00 = standard

Position of the ports

P = Pressure port
S = Suction port

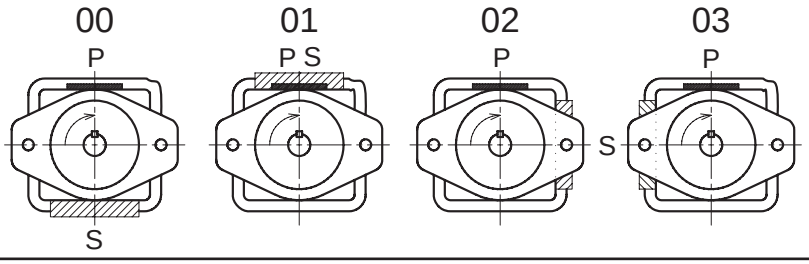

Parker Hannifin
Pump & Motor Division Europe
Vierzon - France

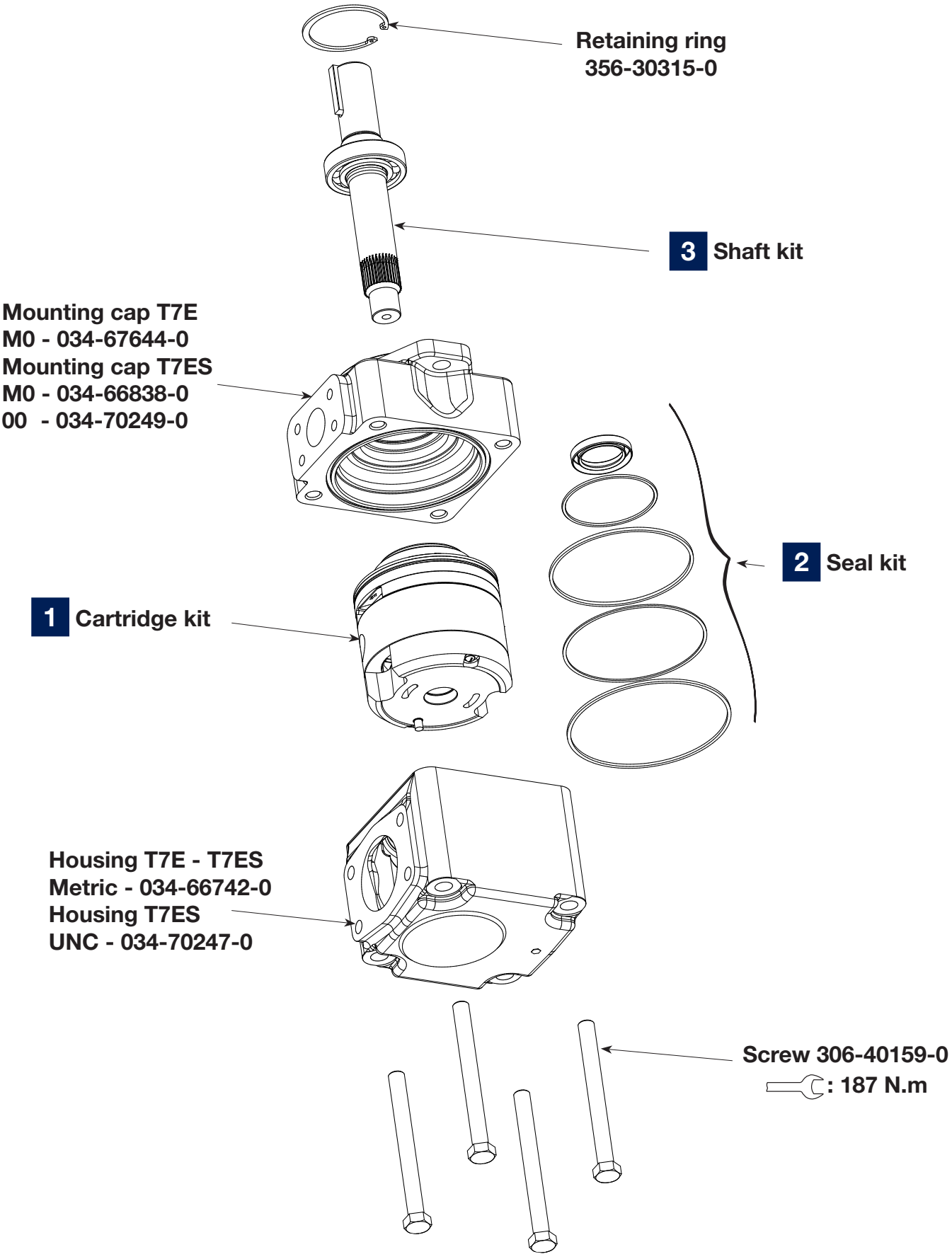
Retaining ring
356-30315-0
3 Shaft kit
Mounting cap T7E
M0 - 034-67644-0
Mounting cap T7ES
M0 - 034-66838-0
00 - 034-70249-0
2 Seal kit
1 Cartridge kit
Housing T7E - T7ES
Metric - 034-66742-0
Housing T7ES
UNC - 034-70247-0
Screw 306-40159-0
: 187 N.m

1 Cartrige kit (Preferred)

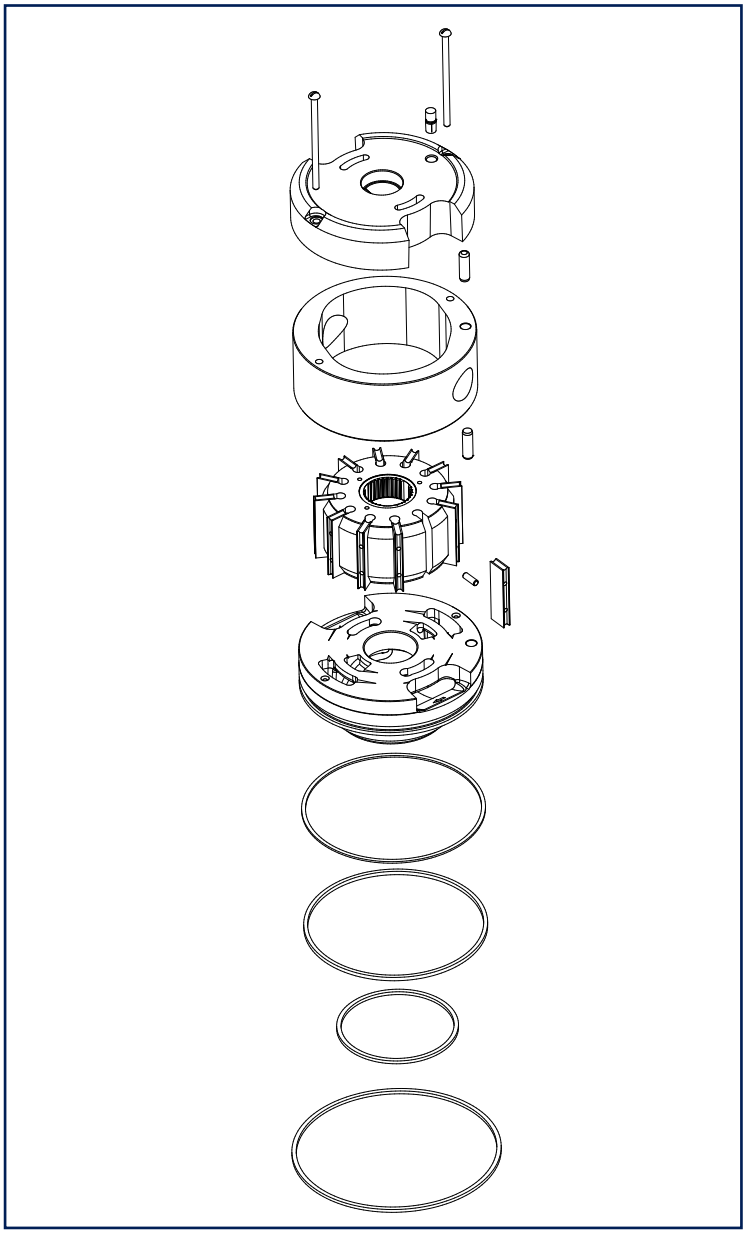

T7E - T7ES - **0** -** * ***** ** - * * - **

Cartridge kit	Code N°	
Displacement	R (CW)	L (CCW)
042	S24-77575-*	S24-77576-*
045	S24-77577-*	S24-77578-*
050	S24-77579-*	S24-77580-*
052	S24-77581-*	S24-77582-*
054	S24-77583-*	S24-77584-*
057	S24-77585-*	S24-77586-*
062	S24-77587-*	S24-77588-*
066	S24-77589-*	S24-77590-*
072	S24-77591-*	S24-77592-*
085	S24-77593-*	S24-77594-*

* = 0 = S1 BUNA N
* = 4 = S4 EPDM
* = 5 = S5 VITON®

Parker Hannifin
Pump & Motor Division Europe
Vierzon - France

Cartridge loose items

1 x	1 x		1 x	12 x	12 x	1 x
CW - S24-72257-0 CCW - S24-72258-0	042	034-67503-0	S24-10185-0	034-59162-0	034-59161-0	CW - 034-67408-0 CCW - 034-67434-0
	045	034-67504-0				
	050	034-67505-0				
	052	034-67506-0				
	054	034-67619-0				
	057	034-67507-0				
	062	034-67508-0				
	066	034-67509-0				
	072	034-67447-0				
	085	034-67455-0				

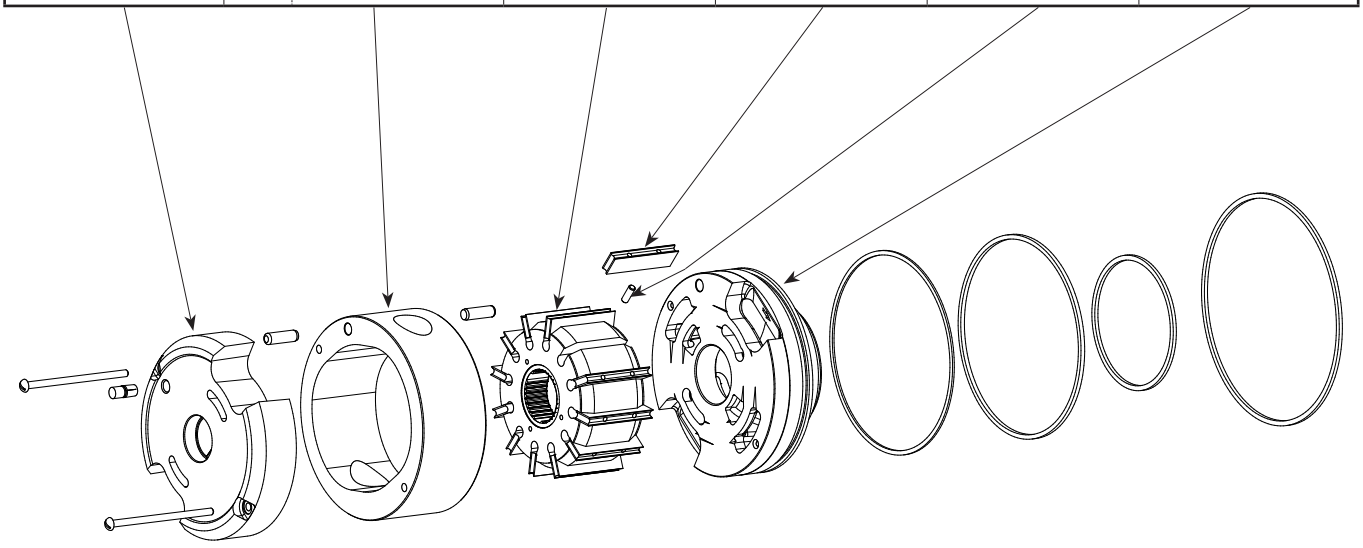

2 Seal kit

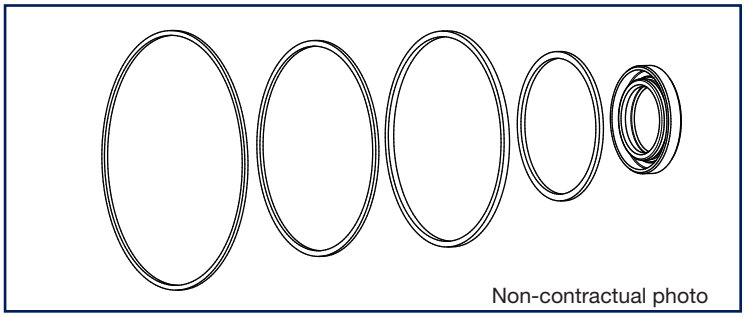
Non-contractual photo

Seal kit	Code N°
T7E - T7ES - *** - * * ** - * **1** - **	**S24-10186-0**
T7E - T7ES - *** - * * ** - * **4** - **	**S24-10186-4**
T7E - T7ES - *** - * * ** - * **5** - **	**S24-10186-5**

3 Shaft kit

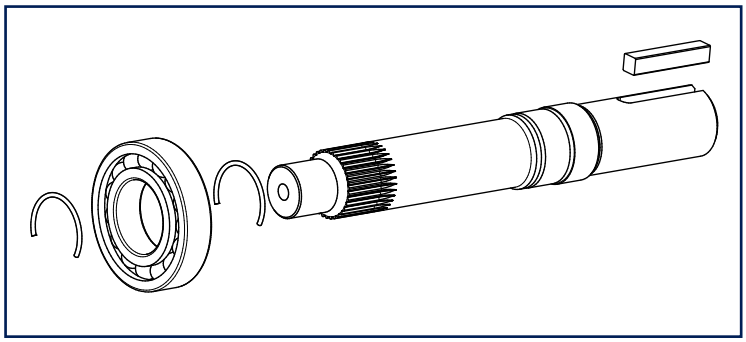

Shaft kit	Code N°
T7ES - *** - **1** * ** - * * - **	**S14-28174-0**
T7ES - *** - **2** * ** - * * - **	**S24-49212-0**
T7ES - *** - **3** * ** - * * - **	**S14-28173-0**
T7ES - *** - **4** * ** - * * - **	**S24-00092-0**
T7E - T7ES - *** - **5** * ** - * * - **	**S24-76750-0**

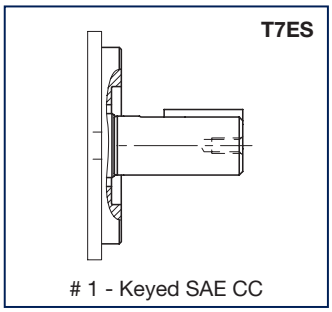

1 - Keyed SAE CC

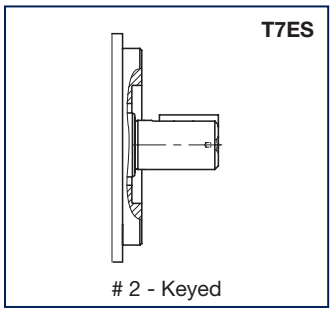

2 - Keyed

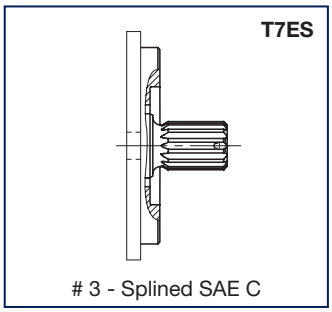

3 - Splined SAE C

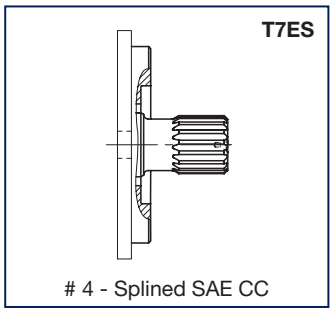

4 - Splined SAE CC

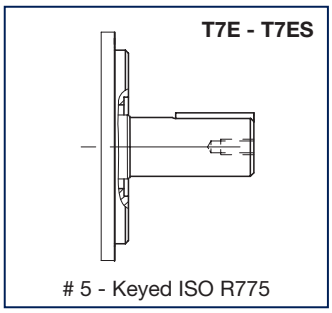

5 - Keyed ISO R775

Parker Hannifin
Pump & Motor Division Europe
Vierzon - France

S **P**

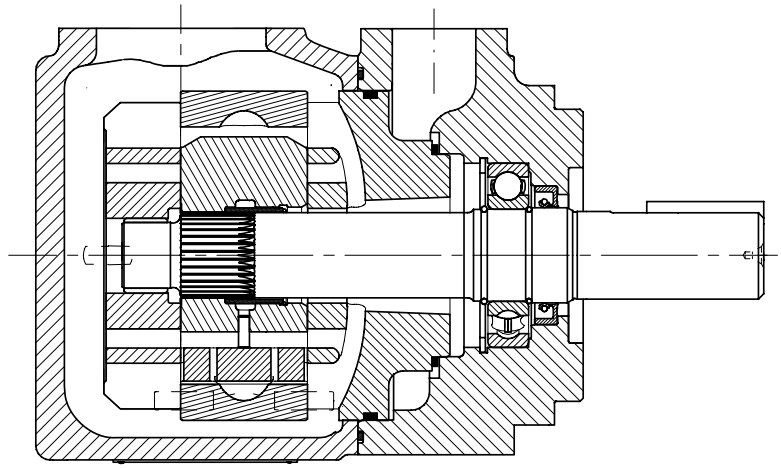

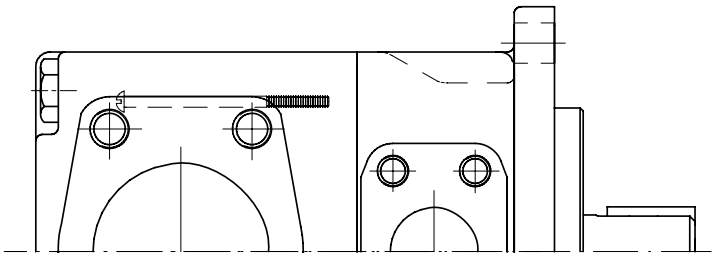

⚠ WARNING – USER RESPONSIBILITY

FAILURE OR IMPROPER SELECTION OR IMPROPER USE OF THE PRODUCTS DESCRIBED HEREIN OR RELATED ITEMS CAN CAUSE DEATH, PERSONAL INJURY AND PROPERTY DAMAGE.

This document and other information from Parker-Hannifin Corporation, its subsidiaries and authorized distributors provide product or system options for further investigation by users having technical expertise.

The user, through its own analysis and testing, is solely responsible for making the final selection of the system and components and assuring that all performance, endurance, maintenance, safety and warning requirements of the application are met. The user must analyze all aspects of the application, follow applicable industry standards, and follow the information concerning the product in the current product catalog and in any other materials provided from Parker or its subsidiaries or authorized distributors.

To the extent that Parker or its subsidiaries or authorized distributors provide component or system options based upon data or specifications provided by the user, the user is responsible for determining that such data and specifications are suitable and sufficient for all applications and reasonably foreseeable uses of the components or systems.

Offer of Sale

Please contact your Parker representation for a detailed ”Offer of Sale”.

Parker Worldwide

Europe, Middle East, Africa

AE – United Arab Emirates,
Dubai
Tel: +971 4 8127100
parker.me@parker.com

AT – Austria, Wiener Neustadt
Tel: +43 (0)2622 23501-0
parker.austria@parker.com

AT – Eastern Europe, Wiener Neustadt
Tel: +43 (0)2622 23501 900
parker.easteurope@parker.com

AZ – Azerbaijan, Baku
Tel: +994 50 22 33 458
parker.azerbaijan@parker.com

BE/LU – Belgium, Nivelles
Tel: +32 (0)67 280 900
parker.belgium@parker.com

BG – Bulgaria, Sofia
Tel: +359 2 980 1344
parker.bulgaria@parker.com

BY – Belarus, Minsk
Tel: +48 (0)22 573 24 00
parker.poland@parker.com

CH – Switzerland, Etoy
Tel: +41 (0)21 821 87 00
parker.switzerland@parker.com

CZ – Czech Republic, Klecany
Tel: +420 284 083 111
parker.czechrepublic@parker.com

DE – Germany, Kaarst
Tel: +49 (0)2131 4016 0
parker.germany@parker.com

DK – Denmark, Ballerup
Tel: +45 43 56 04 00
parker.denmark@parker.com

ES – Spain, Madrid
Tel: +34 902 330 001
parker.spain@parker.com

FI – Finland, Vantaa
Tel: +358 (0)20 753 2500
parker.finland@parker.com

FR – France, Contamine s/Arve
Tel: +33 (0)4 50 25 80 25
parker.france@parker.com

GR – Greece, Athens
Tel: +30 210 933 6450
parker.greece@parker.com

HU – Hungary, Budaoers
Tel: +36 23 885 470
parker.hungary@parker.com

IE – Ireland, Dublin
Tel: +353 (0)1 466 6370
parker.ireland@parker.com

IT – Italy, Corsico (MI)
Tel: +39 02 45 19 21
parker.italy@parker.com

KZ – Kazakhstan, Almaty
Tel: +7 7273 561 000
parker.easteurope@parker.com

NL – The Netherlands, Oldenzaal
Tel: +31 (0)541 585 000
parker.nl@parker.com

NO – Norway, Asker
Tel: +47 66 75 34 00
parker.norway@parker.com

PL – Poland, Warsaw
Tel: +48 (0)22 573 24 00
parker.poland@parker.com

PT – Portugal
Tel: +351 22 999 7360
parker.portugal@parker.com

RO – Romania, Bucharest
Tel: +40 21 252 1382
parker.romania@parker.com

RU – Russia, Moscow
Tel: +7 495 645-2156
parker.russia@parker.com

SE – Sweden, Spånga
Tel: +46 (0)8 59 79 50 00
parker.sweden@parker.com

SK – Slovakia, Banská Bystrica
Tel: +421 484 162 252
parker.slovakia@parker.com

SL – Slovenia, Novo Mesto
Tel: +386 7 337 6650
parker.slovenia@parker.com

TR – Turkey, Istanbul
Tel: +90 216 4997081
parker.turkey@parker.com

UA – Ukraine, Kiev
Tel: +48 (0)22 573 24 00
parker.poland@parker.com

UK – United Kingdom, Warwick
Tel: +44 (0)1926 317 878
parker.uk@parker.com

ZA – South Africa, Kempton Park
Tel: +27 (0)11 961 0700
parker.southafrica@parker.com

North America

CA – Canada, Milton, Ontario
Tel: +1 905 693 3000

US – USA, Cleveland (industrial)
Tel: +1 216 896 3000

US – USA, Elk Grove Village (mobile)
Tel: +1 847 258 6200

Asia Pacific

AU – Australia, Castle Hill
Tel: +61 (0)2-9634 7777

CN – China, Shanghai
Tel: +86 21 2899 5000

HK – Hong Kong
Tel: +852 2428 8008

ID – Indonesia, Tangerang
Tel: +62 21 7588 1906

IN – India, Mumbai
Tel: +91 22 6513 7081-85

JP – Japan, Fujisawa
Tel: +81 (0)4 6635 3050

KR – South Korea, Seoul
Tel: +82 2 559 0400

MY – Malaysia, Shah Alam
Tel: +60 3 7849 0800

NZ – New Zealand, Mt Wellington
Tel: +64 9 574 1744

SG – Singapore
Tel: +65 6887 6300

TH – Thailand, Bangkok
Tel: +662 186 7000

TW – Taiwan, New Taipei City
Tel: +886 2 2298 8987

VN – Vietnam, Ho Chi Minh City
Tel: +84 8 3999 1600

South America

AR – Argentina, Buenos Aires
Tel: +54 3327 44 4129

BR – Brazil, Cachoeirinha RS
Tel: +55 51 3470 9144

CL – Chile, Santiago
Tel: +56 2 623 1216

MX – Mexico, Toluca
Tel: +52 72 2275 4200

Ed. 2016-04-04

© 2018 Parker Hannifin Corporation. All rights reserved.

Catalogue MSG29-0078-M1/UK, 01/2018

EMEA Product Information Centre
Free phone: 00 800 27 27 5374
(from AT, BE, CH, CZ, DE, DK, EE, ES, FI, FR, IE, IL, IS, IT, LU, MT, NL, NO, PL, PT, RU, SE, SK, UK, ZA)

US Product Information Centre
Toll-free number: 1-800-27 27 537

www.parker.com

Your local authorized Parker distributor