Technical Information

H1B 060/080/110/160/210/250
Bent Axis Motors



Revision history

Table of revisions

Date	Changed	Rev
October 2025	Updated 7-32v table, coil resistance	1303
February 2025	Updated loop flushing options	1302
November 2024	Added metric information	1301
April 2024	Added AN,AP, 00A options	1217
April 2022	Updated speed sensor information	1216
April 2021	Corrected formatting and content appearance	1215
August 2020	Added maximum displacement options for 110cc and 210cc	1214
May 2020	Added DIN 250cc flange, changed document number from BC00000043	1213
December 2019	Updated model code section and corrected speed sensor pinout information.	1111
July 2019	Document Title and reference to STS TI.	1110
May 2019	Minor update.	1109
March 2018	Model code and ports update.	1108
February 2018	Model code update.	1107
December 2017	PWM data change.	1106
November 2017	Note for speed sensor added.	1105
April 2017	Dimensions table correction.	1104
December 2016	KHKH control correction.	1103
August 2016	DIN, Cartridge flange measures corrections.	1102
July 2016	Major update. New hydraulic controls added.	1101
May 2008- July 2016	Various updates, new sizes, Converted to Danfoss, DITA CMS.	0101-1001

Contents

General information

Design of H1 bent axis motor 6
About the H1 motors 8
The H1 range of products 8
H1 pictorial diagram 9
H1 system schematic 10

Technical specifications

General specifications 11
Physical properties 11
Operating Parameters 12
H1B speed range diagrams for open and closed circuit 13
Required inlet pressure diagrams (for cylinder block filling) 14
Required outlet pressure diagrams (minimum for short time usage) 15
Required low pressure diagrams (minimum for extended usage) 16
Open circuit requirements 17
Fluid specifications 17
Determination of nominal motor size 18

Operation

Shaft rotation direction 19
Loop flushing shuttle spool 21
Loop flushing relief valve 22
Displacement limiter 22
Speed sensor 23
Temperature Range 23
Protection Characteristics 23
Mating connectors 23
Available Sensors 23
Speed sensor 4.5 – 8 V 24
Speed Sensor 7 - 32 V 24
Sensor position 25
Target Ring 25

Operating parameters

Output speed 26
System pressure 27
Case pressure 27
External shaft seal pressure 27
Temperature 28
Viscosity 28

System design parameters

Filtration system 29
Reservoir 29
Fluid Selection 30
Case Drain 30
Independent braking system 30
Bearing loads and life 30
Shaft Torque 30

Master Model Code

Size, version, and port options 31
Control options 32
PCOR and BPD options 34
Threshold setting and orifice options 35
Endcap, flange and housing options 36
Shaft, sensor, and loop flushing shuttle system options 38
Loop flushing and special hardware options 39
Minimum and maximum displacement options 40
PCOR pressure setting, paint and nametag options 41

Contents

Control operation and description

Electric controls ... 42
Electric proportional controls ... 42
Electric two-position controls ... 42
Servo supply ... 42
Control options ... 43
PCOR ... 43
Electric proportional with PCOR ... 43
Electric two-position with PCOR ... 43
Electric two-position with proportional PCOR ... 43
Hydraulic controls ... 44
Hydraulic proportional control ... 44
Hydraulic two-position control ... 44
Hydraulic proportional with PCOR ... 45
Hydraulic two-position with PCOR ... 45
Brake Pressure Defeat (BPD) ... 45
Electric BPD ... 45
Electric solenoid connector ... 45
Hydraulic BPD ... 46
H1B control response ... 46
Applications related to controls ... 47

Electric proportional and two-position controls

L1BA and L2BA options ... 48
D1MA and D2MA options with PCOR ... 50
D1M1 and D2M2 options with PCOR and electric BPD ... 52
M1CA and M2CA options ... 54
K1KA and K2KA options with PCOR ... 56
K1K1 and K2K2 options with PCOR and electric BPD ... 58
E1AA and E2AA options ... 60
F1EA and F2EA options ... 61
T1DA and T2DA options with PCOR ... 62
T1D1 and T2D2 options with PCOR and electric BPD ... 64
T1G1 and T2G2 options with PCOR and electric BPD ... 66
P1DA and P2DA options with PCOR ... 68
P1D1 and P2D2 options with PCOR and electric BPD ... 70
P1G1 and P2G2 options with PCOR and electric BPD ... 72

Hydraulic proportional and two-position controls

LHBA option ... 74
MHCA option ... 76
DHMA option with PCOR ... 78
DHMH option with PCOR and BPD ... 80
KHKA option with PCOR ... 82
KHKH option with PCOR and BPD ... 84
HEHE option ... 86
HFHF option ... 87
THHA option with PCOR ... 88
THHB option with PCOR and hydraulic BPD ... 89

Pressure compensator over-ride and electric BPD

TADA option ... 91
TAD1 and TAD2 options with electric BPD ... 92
TAG1 and TAG2 options ... 94

Flange and housing dimensions

SAE flange design – option L* (proportional control) ... 95
SAE flange design – option M* (proportional control) ... 97
SAE flange design – options T* D* and P* D* (two-position control, PCOR, electric BPD) ... 99
SAE flange design ports per ISO 11 926-1 ... 101
SAE mounting flange design per ISO 3019/1 ... 102

Contents

O-ring groove dimensions 103
DIN flange design – option L* (proportional control) 104
DIN flange design – option M* (proportional control) 106
DIN flange design – options T* D* and P* D* (two-position control, PCOR, electric BPD) 108
DIN flange design ports per ISO 11 926-1 110
DIN mounting flange design per ISO 3019/2 111
Cartridge flange design – option L* (proportional control) 113
Cartridge flange design – option M* (proportional control) 115
Cartridge flange design – options T* D* and P* D* (two-position control, PCOR, electric BPD) 117
Cartridge flange design ports per ISO 11 926-1 119
Cartridge mounting flange design 120
H1B cartridge motors with speed sensor 123

Control dimensions

Options L1BA and L2BA (Electric proportional control) 124
Option D*MA (Electric proportional control) 125
Option D*M* (Electric proportional control) 126
Options M1CA and M2CA (Electric proportional control) 127
Option K*KA (Electric proportional control) 128
Options K1K1 and K2K2 (Electric proportional control with PCOR and BPD) 129
Options E1AA and E2AA (Electric two-position control) 130
Options F1EA and F2EA (Electric two-position control) 131
Options T1DA, T2DA and P1DA, P2DA (Electric two-position controls with PCOR and electric proportional PPCOR) 132
Options T1D1, T2D2 and P1D1, P2D2 (Electric two-position controls with PCOR, BPD and electric proportional PPCOR, BPD) 133
Option LHBA (Hydraulic proportional control) 135
Option MHCA (Hydraulic proportional control) 136
Option DHMA (Hydraulic proportional control) 137
Option DHMH (Hydraulic proportional control) 138
Option HEHE (Hydraulic two-position control) 140
Option HFHF (Hydraulic two-position control) 141
Option THHA (Hydraulic two-position control) 142
Option THHB (Hydraulic two-position control) 143
Option TADA (Hydraulic two-position control) 145
Option TAD1 and TAD2 (Hydraulic two-position control) 146

General information

Design of H1 bent axis motor

Cross-section of H1 motor with electric proportional control

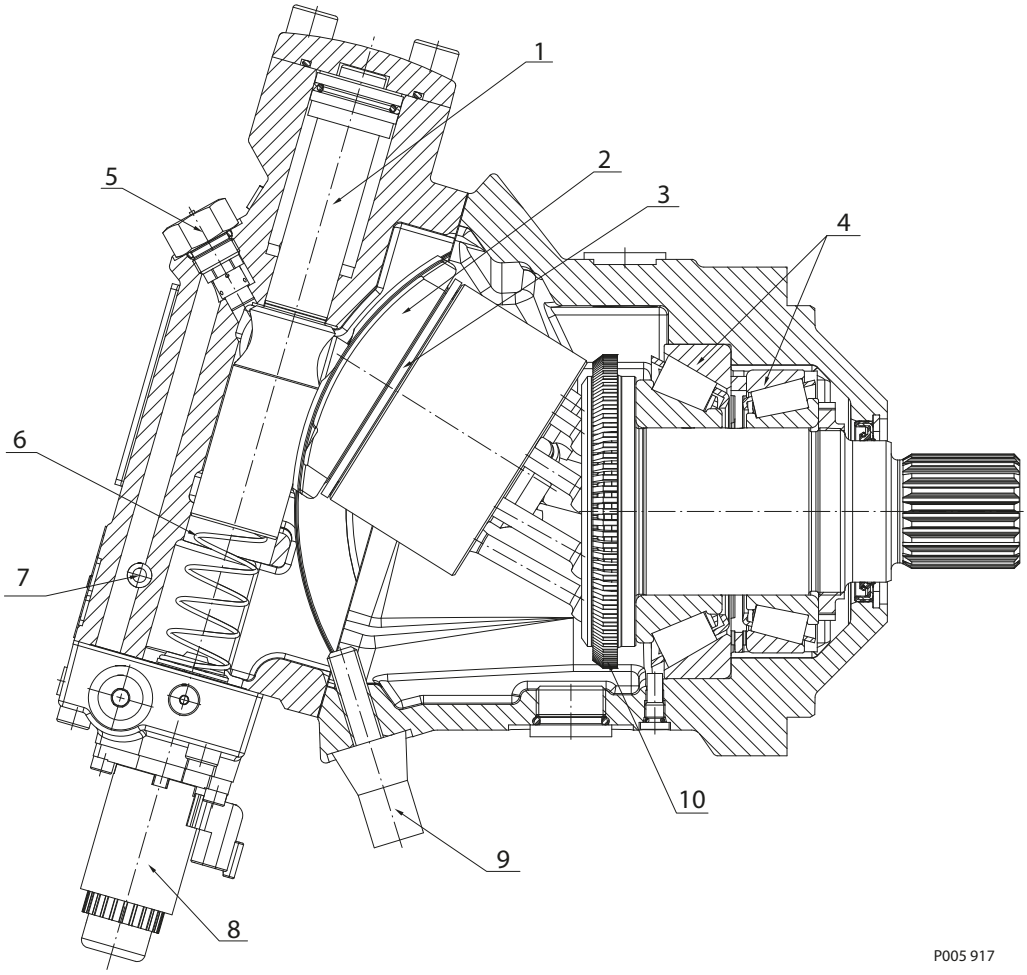

1. Differential servo piston
2. Valve segment
3. Bearing plate
4. Tapered roller bearing
5. Loop flushing relief valve
6. Ramp spring
7. Loop flushing shuttle spool
8. Electric proportional control
9. Minimum displacement limiter
10. Speed ring (optional)

General information

Cross-section of H1 motor with electric two-position control

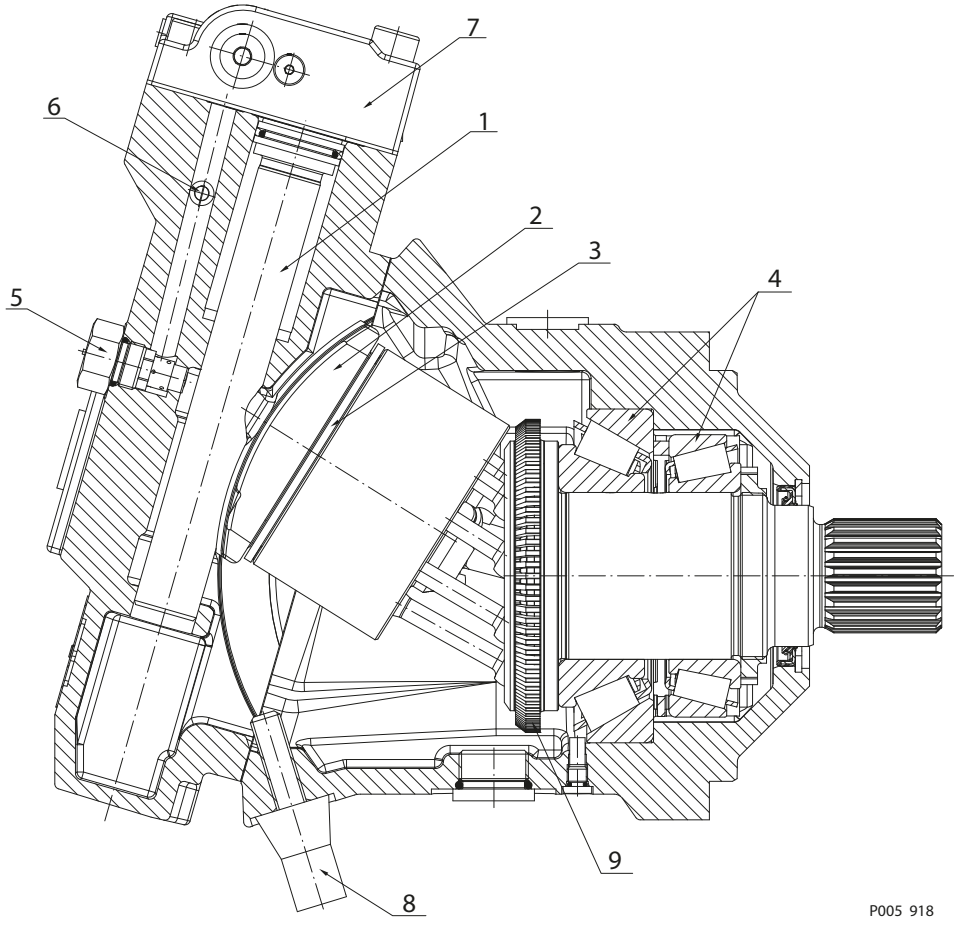

1. Differential servo piston
2. Valve segment
3. Bearing plate
4. Tapered roller bearing
5. Loop flushing relief valve
6. Loop flushing shuttle spool
7. Electric two-position control
8. Minimum displacement limiter
9. Speed ring (optional)

General information

About the H1 motors

Series H1 variable displacement motors are bent axis design, incorporating spherical pistons.

These motors are designed primarily to be combined with other products in closed circuit systems to transfer and control hydraulic power. Series H1 motors have a large maximum/minimum displacement ratio of 5:1 and high output speed capabilities.

The expanded function of zero degree capability, coupled with a high performance 32 degree maximum angle, creates opportunities to easily improve the machine performance for:

- Wheel assist on the steering axle of high inertia machines (i.e. combines) and could include Anti Slip Control
- Off-highway machines requiring Anti Slip Control (i.e. Ag. sprayer)
- Multi-motor applications requiring optimized work and transport modes (i.e. wheel loader, Ag sprayer) utilizing the zero degree position for maximum transport speed
- Improved machine (i.e. single drum roller) gradeability through precise Anti Slip Control

The Anti Slip Control reduces ground damage, increases traction control and improves machine controllability for the operator.

SAE, Cartridge (not available for 210 cm^3 and 250 cm^3) and DIN flange with radial or axial high pressure port configurations are available including the loop flushing device.

A complete family of controls and regulators are available to fulfill the requirements of a wide range of applications.

Motors normally start at maximum displacement. This provides maximum starting torque for high acceleration.

All controls utilize internally supplied servo pressure. This may be overridden by a pressure compensator which functions when the motor is operating in motor and pump modes. A defeat option is available to disable the pressure compensator override when the motor is running in pump mode during deceleration/braking.

The pressure compensator option features a low pressure rise to ensure optimal power utilization throughout the entire displacement range of the motor.

Speed sensor options are available to cover all frame sizes and flange styles.

They are capable of sensing the following, all in one package:

- Speed
- Direction (only group "J", option "S")
- Temperature (only group "J", option "S")

  The electric controls are specifically designed for the Danfoss family of PLUS+1® microcontrollers for easy "Plug and Perform" installation.

The H1 range of products

A growing family based on the success of the Series 51 product family:

- Initial release of 060 cm^3, 080 cm^3, 110 cm^3, 160 cm^3, 210 cm^3 and 250 cm^3 displacement size.
- Development plans include additional displacement sizes.

General information

H1 pictorial diagram

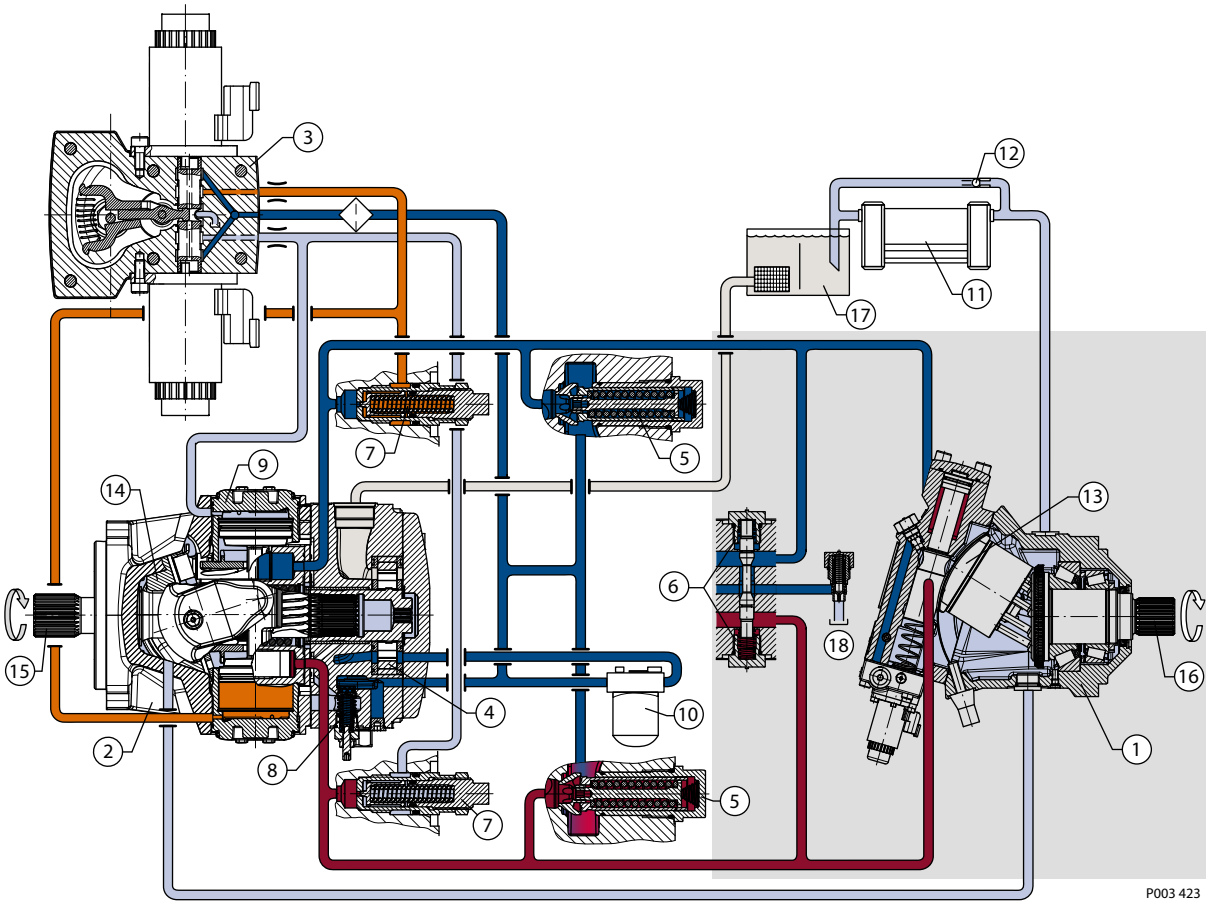

Working loop A (Low pressure) and charge pressure

Working loop B (High pressure)

Servo pressure

Case drain

Suction

1. Bent Axis Variable Displacement Motor
2. Axial Piston Variable Displacement Pump
3. Electric Displacement Control (EDC)
4. Charge Pump
5. Charge Check / High Pressure Relief Valve
6. Loop Flushing Valve
7. Pressure Limiter Valve
8. Charge Pressure Relief Valve
9. Servo Cylinder
10. Charge Pressure Filter
11. Heat Exchanger
12. Heat Exchanger Bypass Valve
13. Valve Segment
14. Pump Swashplate
15. Input Shaft
16. Output Shaft
17. Reservoir
18. to Motor Case

General information

H1 system schematic

System schematic H1 pump and H1 motor with EDC

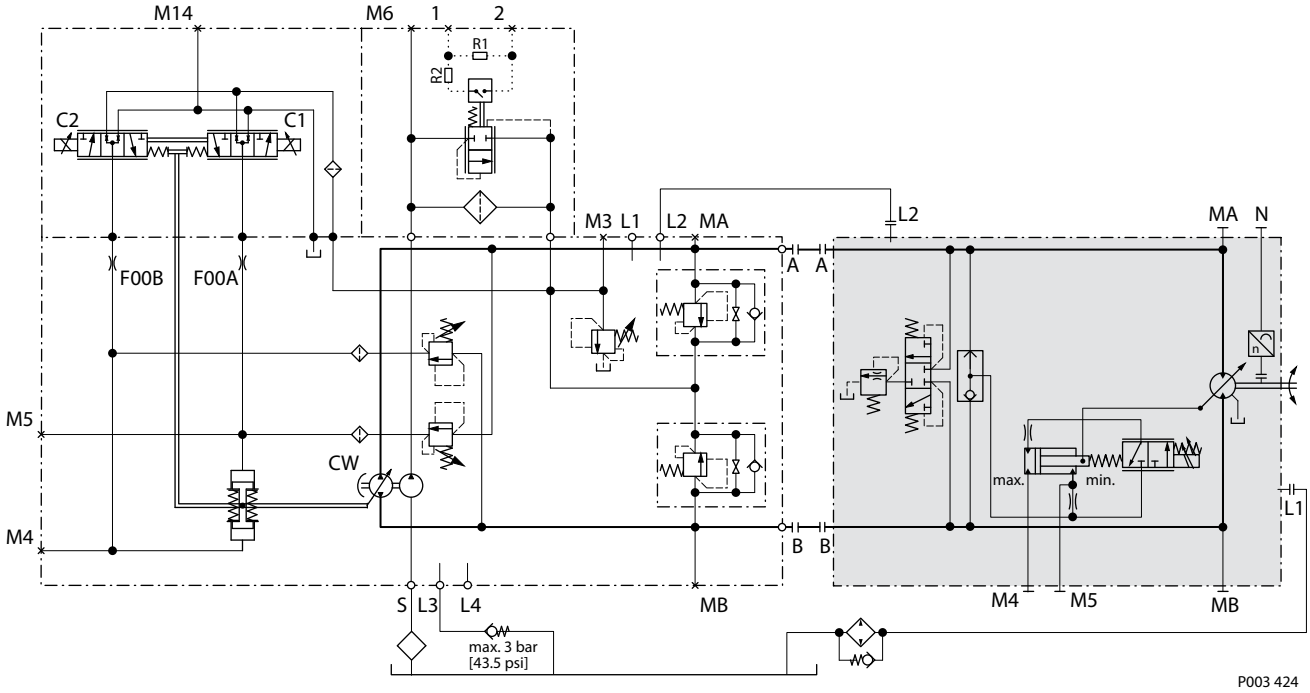

The schematic above shows the function of a hydrostatic transmission using an H1 axial variable displacement pump with electric proportional displacement control (EDC) and an H1 bent axis variable displacement motor with electric proportional control (L*) and integrated loop flushing device.

Technical specifications

General specifications

General specifications

Design	Piston motor with variable displacement bent axis design
Direction of rotation	Bi-directional
Pipe connections	*Main pressure ports:* ISO split flange boss *Remaining ports:* Metric straight thread O-ring boss
Recommended installation	Discretionary, the housing must always be filled with hydraulic fluid

Physical properties

Physical properties

Features		**Unit**	**Size**					
			060	**080**	**110**	**160**	**210**	**250**
Displacement	**maximum**	cm^3 [in^3]	60 [3.66]	80 [4.88]	110 [6.71]	160 [9.76]	210 [12.81]	250 [15.25]
	minimum		12 [0.73]	16 [0.98]	22 [1.34]	32 [1.95]	42 [2.56]	50 [3.05]
Theoretical flow at max. displ.	**at rated speed**	l/min [US gal/min]	216 [57]	256 [68]	319 [84]	416 [110]	504 [133]	550 [145]
	at max. speed		270 [71]	328 [87]	407 [108]	528 [139]	630 [166]	700 [185]
Theoretical torque at max. displacement		N•m/bar [lb•in/1000 psi]	0.96 [583]	1.27 [777]	1.75 [1069]	2.55 [1555]	3.34 [2038]	3.98 [2426]
Theor. corner power at rated speed and max. working pressure (Δp = 450 bar [6527 psi])		kW [hp]	266 [357]	321 [430]	396 [531]	513 [689]	609 [817]	684 [917]
Mass moment of inertia of rotating components		$kg•m^2$ [$slug•ft^2$]	0.0038 [0.0028]	0.0062 [0.0046]	0.0108 [0.0080]	0.0211 [0.0156]	0.0306 [0.0226]	0.0402 [0.0296]
Case volume		l [US gal]	0.9 [0.24]	1.0 [0.26]	1.4 [0.37]	2.7 [0.71]	2.8 [0.74]	4.1 [1.08]

Weight dry (Electric proportional control)

Configuration	**Size**					
	060	**080**	**110**	**160**	**210**	**250**
SAE	29.8 kg [65.7 lb]	34.8 kg [76.7 lb]	48.8 kg [107.6 lb]	61.9 kg [136.5 lb]	81.0 kg [179 lb]	87.0 kg [196.2 lb]
DIN	28.3 kg [62.4 lb]	34.4 kg [75.8 lb]	45.0 kg [99.2 lb]	59.3 kg [130.7 lb]	75.0 kg [165 lb]	79.6 kg [175.5 lb]
Cartridge	26.9 kg [59.3 lb]	33.0 kg [72.6 lb]	41.8 kg [92.2 lb]	54.7 kg [120.6 lb]	–	–

Mounting flange

Configuration	**Size**					
	060	**080**	**110**	**160**	**210**	**250**
SAE ISO 3019/1	127-4 (SAE C) 4-bolt		152-4 (SAE-D) 4-bolt		165-4 (SAE E)	
DIN ISO 3019/2, B4	125 HL 4-bolt	140 HL 4-bolt	160 HL 4-bolt	180 HL 4-bolt	200 HL 4-bolt	200 HL 4-bolt
Cartridge	Pilot Ø160 mm 2-bolt (200 dist.) M16	Pilot Ø190 mm 2-bolt (224 dist.) M20	Pilot Ø200 mm 2-bolt (250 dist.) M20		–	–

Technical specifications

Customer ports

Size		060	080	110	160	210	250
Axial and radial[1]		DN19 typ 1	DN25 typ 1	DN25 typ 1	DN32 typ 1	DN32 typ 1	DN32 typ 1
Case drain ports[2]	**Inch**	0.875 [7/8]–14UN-2B		1.0625 [1 1/16]–12UN-2B		1.313 [1 5/16]–12UN-2B]	
	Metric	M22-1.5		M27-2.0		M33-2.0	
Axial gauge ports[2][3]	**Inch**	0.875 [7/8]–14UN-2B	1.0625 [1 1/16]–12UN-2B				
	Metric	M22-1.5	M27-2.0				
Radial gauge port[2][3]	**Inch**	0.5625 [9/16]–18UNF-2B					
	Metric	M14-1.5					

[1] Split flange Boss per ISO6162, 40 MPa series

[2] O-ring boss

[3] Countersink may be deeper that specified in the standard.

Operating Parameters

Output Speed

Output Speed	Displacement	Unit	Size					
			060	080	110	160	210	250
Rated	Maximum 32°	min^{-1} (rpm)	3600	3200	2900	2600	2350	2200
	Minimum 6°		5900	5300	4800	4250	3850	3650
	Zero 0°		6600	5950	5350	4750	4300	4050
Maximum	Maximum 32°		4500	4100	3700	3300	3000	2800
	Minimum 6°		7250	6600	5950	5250	4800	4500
	Zero 0°		7950	7200	6500	5750	5250	4900

System and Case Pressure, Ambient Temperature

Parameter		All sizes
System pressure	Maximum working	450 bar [6527 psi]
	Maximum	480 bar [6962 psi]
	Minimum[1]	[2]
Case pressure	Rated	3 bar [44 psi]
	Maximum	5 bar [73 psi]
	Minimum	0.3 bar [4 psi]
Ambient temperature[3]	Maximum	70 °C [158 °F]
	Minimum	-40 °C [-40 °F]

[1] Minimum above case pressure (**open** and **closed** circuit)

[2] See the graphs *Required inlet pressure diagrams (for cylinder block filling)* on page 14.

[3] Air temperature close to the unit.

Technical specifications

H1B speed range diagrams for open and closed circuit

Speed (rpm) versus Displacement (%), Intermittent operation (grey area)

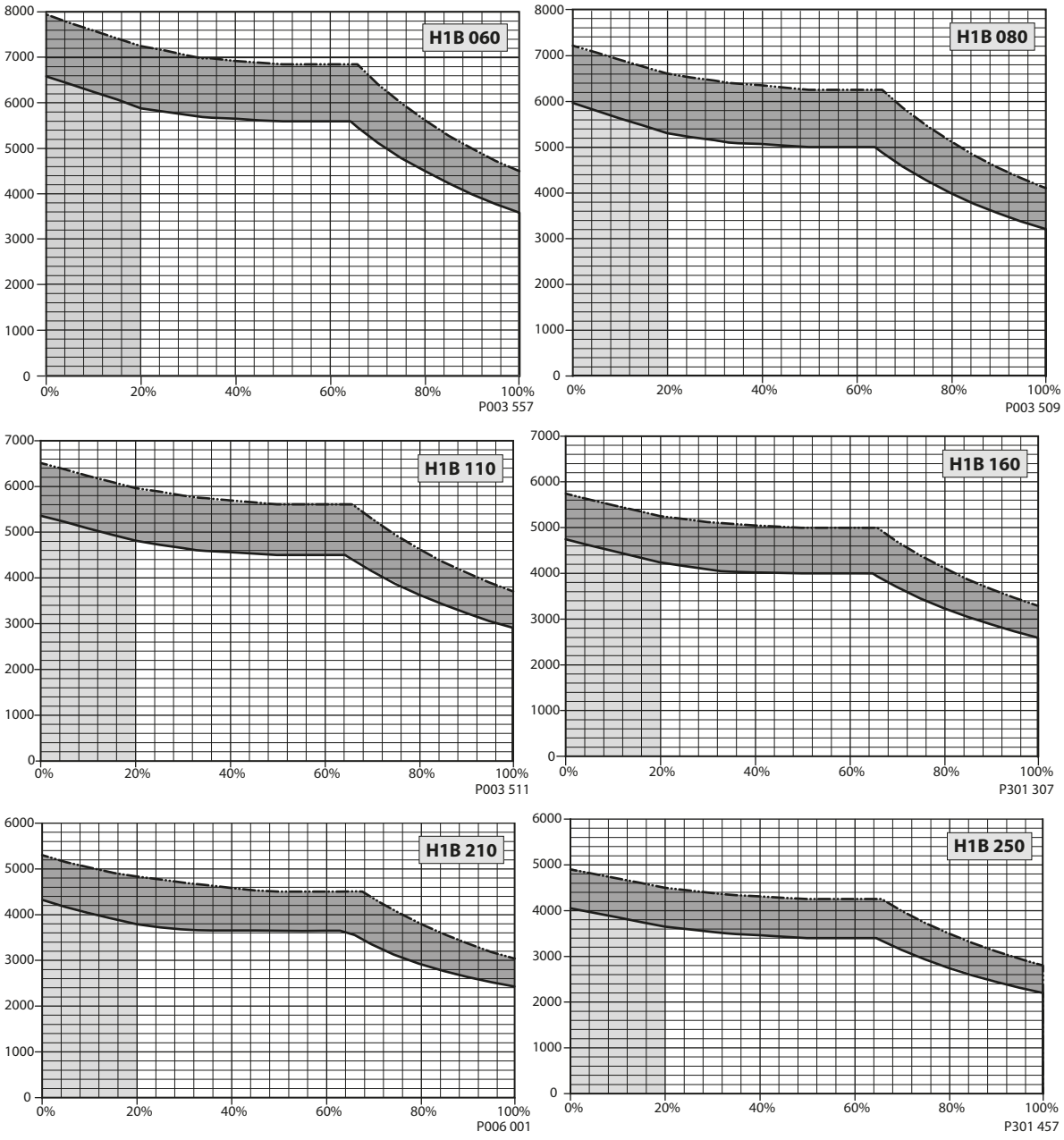

Warning

Zero degree capability results in a high risk of overspeed and drops in efficiency if the motor operates between 0–20% displacement.

For **open circuit** applications it is not allowed to operate in the intermitent area.
For **closed circuit** applications operating in the intermittent area, please contact your local Danfoss Power Solutions representative.

Contact your Danfoss representative for any operation above Rated speed. In these cases, a special option (AN/AP) is available for 160cc, 210cc and 250cc, for applications with speeds between rated speed and maximum speed for delta pressures over 310 bar. See Model code reference "Special hardware feature"*H1B loop flushing, special hardware options*

Technical specifications

Required inlet pressure diagrams (for cylinder block filling)

Speed (rpm) and Pressure (bar) versus Displacement (%)

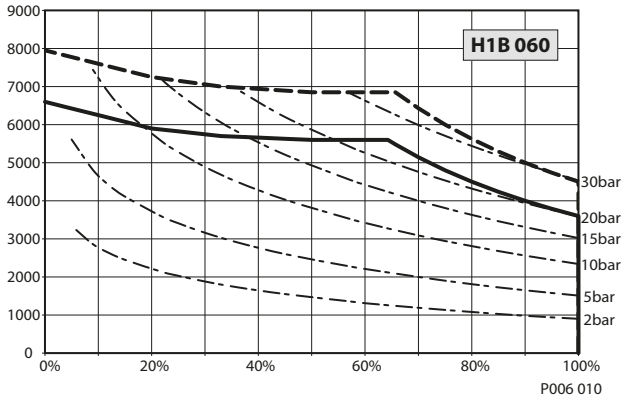

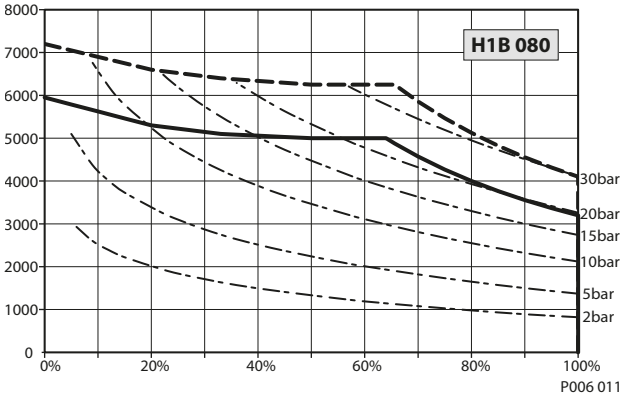

Speed (rpm) and Pressure (bar) versus Displacement (%)

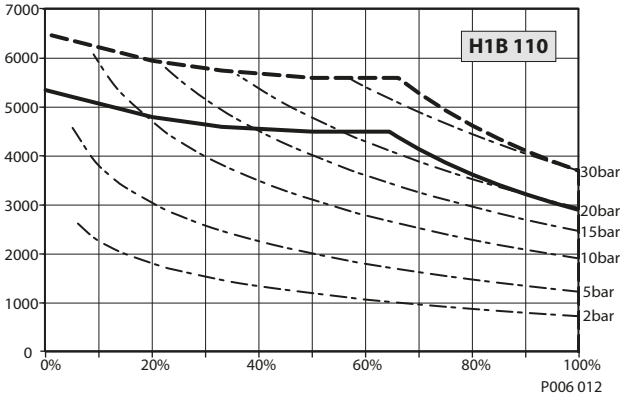

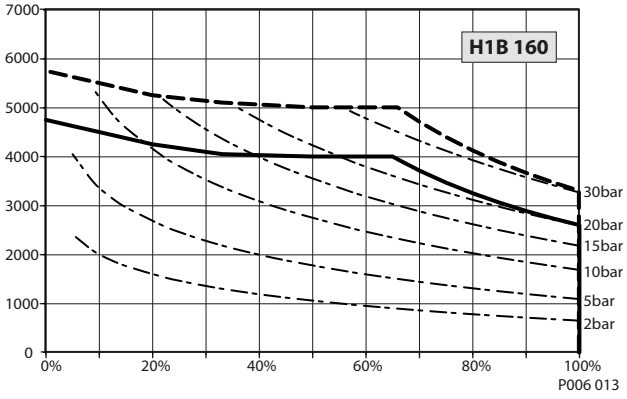

Speed (rpm) and Pressure (bar) versus Displacement (%)

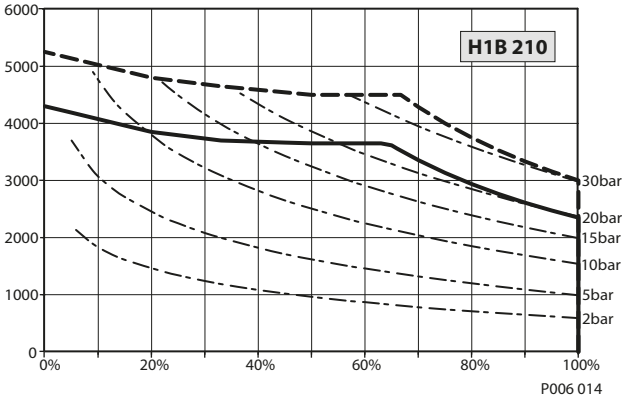

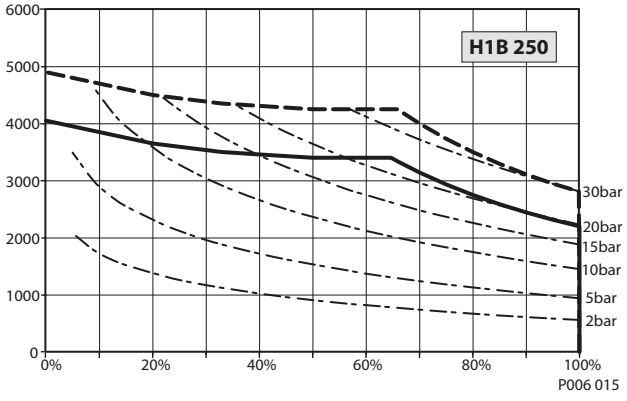

Bold dashed line: Maximum speed

Bold solid line: Rated speed

This pressure ensures that the cylinder block will be properly filled and that there is no pulling between piston and shaft.

The required pressure is 0 bar at 0 rpm and increases with rpm.

For **open circuit** applications it is not allowed to operate above rated speed. For **closed circuit** applications operating between rated and max. speed, please contact your local Danfoss Power Solutions representative.

Technical specifications

Required outlet pressure diagrams (minimum for short time usage)

Speed (rpm) and Pressure (bar) versus Displacement (%)

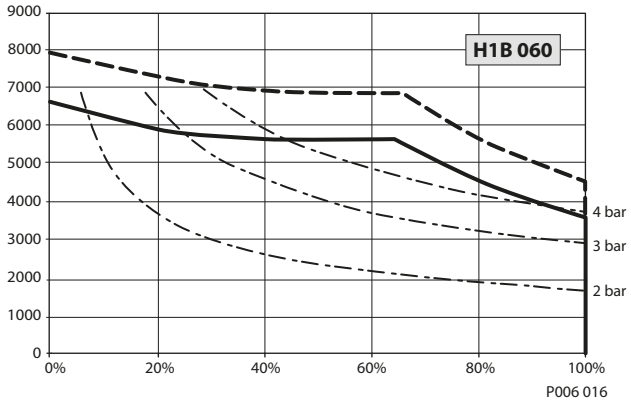

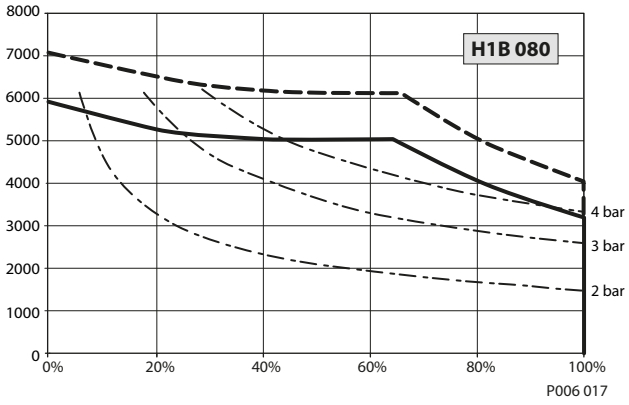

Speed (rpm) and Pressure (bar) versus Displacement (%)

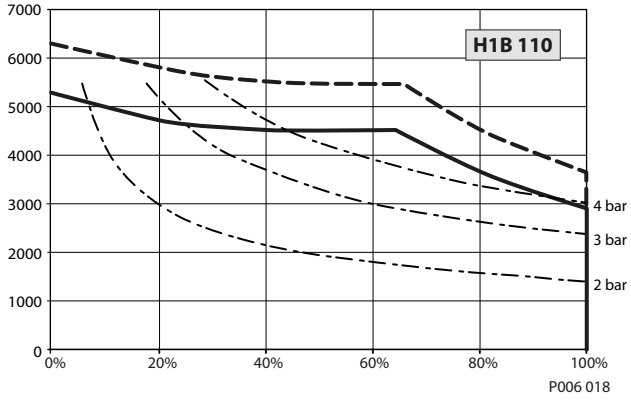

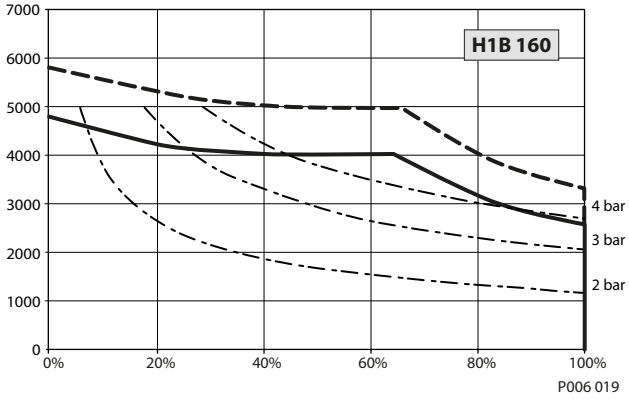

Speed (rpm) and Pressure (bar) versus Displacement (%)

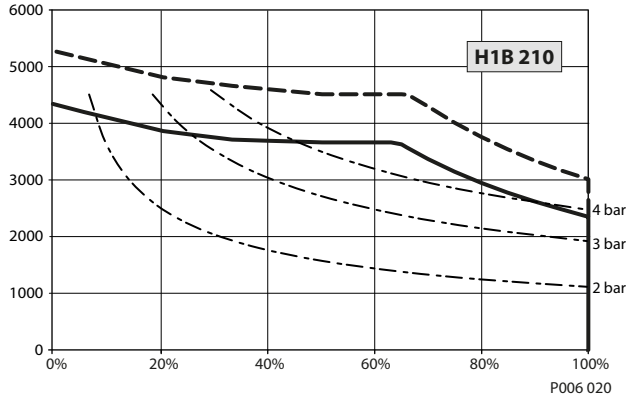

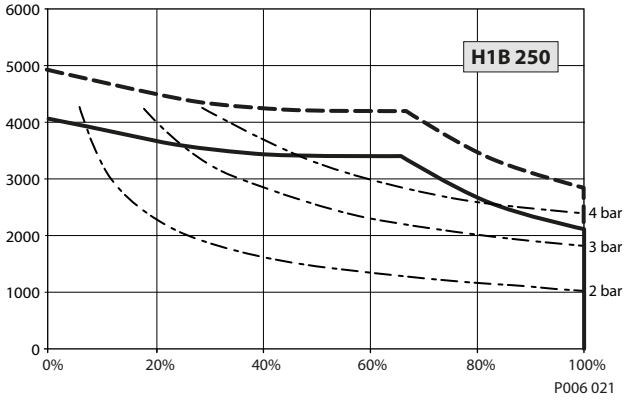

Bold dashed line: Maximum speed / *Bold solid line:* Rated speed

The required outlet pressure (above case pressure) makes sure, that there is no pulling between piston and shaft.

The required pressure is 0 bar at 0 rpm and increases with rpm.

For **open circuit** applications it is not allowed to operate above rated speed. For **closed circuit** applications operating between rated and max. speed, please contact your local Danfoss Power Solutions representative.

Technical specifications

Required low pressure diagrams (minimum for extended usage)

Speed (rpm) and Pressure (bar) versus Displacement (%)

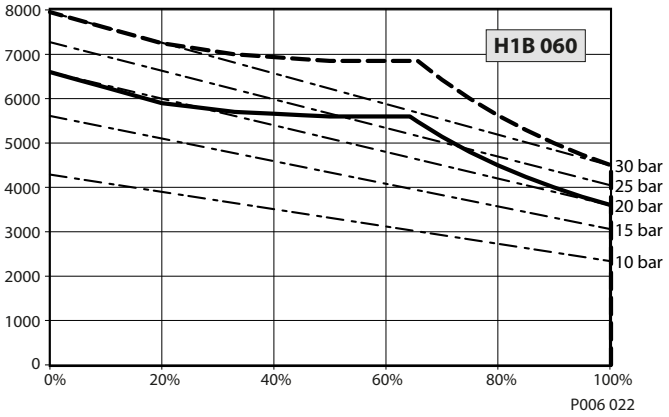

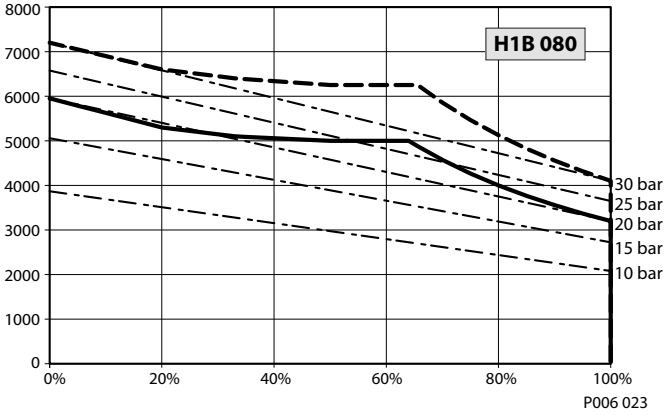

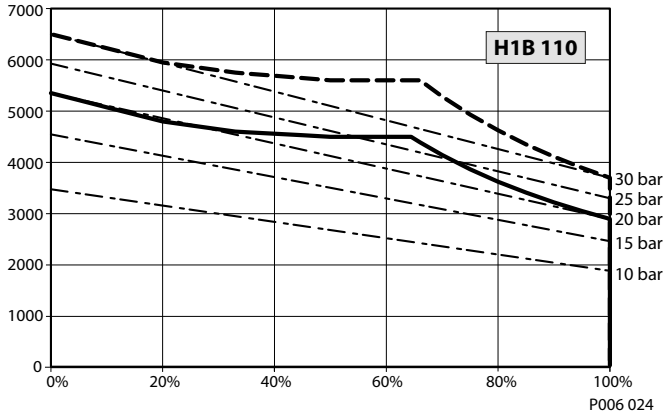

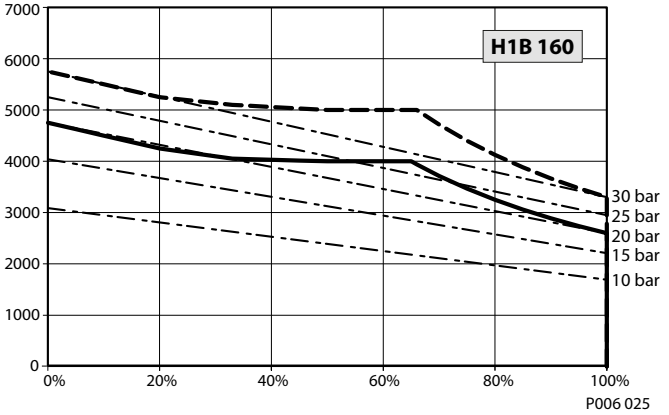

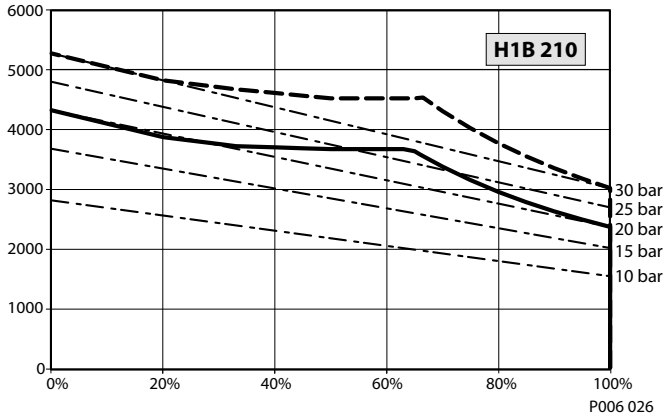

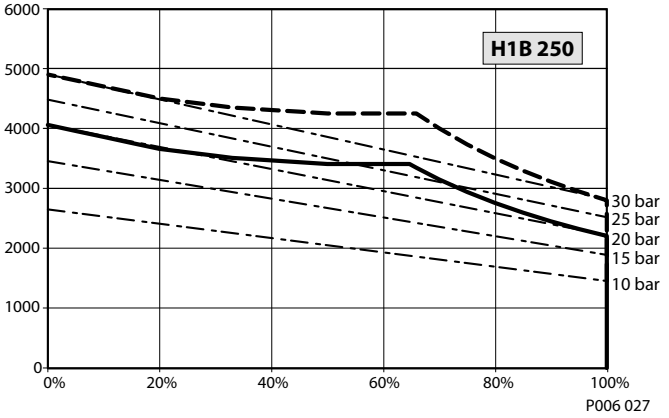

Bold dashed line: Maximum speed / *Bold solid line:* Rated speed

These minimum pressures are required for a high duty cycle, defined as 200 hours at 350 bar. Similarly, a duty cycle of 200 hours at 250 bar requires 50% of these pressures.

This low pressure (above case pressure) is required to prevent cavitation, which comes from the pressure change in the cylinder block. There is very high flow velocity in the porting grooves of the valve segment, which causes cavitation.

For **open circuit** applications it is not allowed to operate above rated speed. For **closed circuit** applications operating between rated and max speed, and for specific duty cycle interpretation or analysis, please contact your local Danfoss Power Solutions representative.

Technical specifications

Open circuit requirements

H1 Bent Axis Motors may be used in **O**pen **C**ircuit (OC) applications.

Since loop flushing is typically not used in OC-applications it is essential to provide sufficient cooling capacity. This can be done by motor case cross flushing.

The flow rate needs to be adjusted to the cooling demand.

The highest case drain outlet port must always be used for the return flow to the cooler or tank.

The motor case, the control system and the working lines connected to Port A and B must be kept full of oil at all times, whether in a dynamic or static condition.

The plumbing must not allow the oil to drain down and be replaced with air in the control or rotating group.

The minimum pressure in the inlet port and the outlet port, measured at gage ports MA and MB, must be equal or higher as shown in the graphs *Required inlet pressure diagrams (for cylinder block filling)* on page 14.

Danfoss bolt-on counterbalance valves may be used to maintain the minimum pressure requirements. Also the Danfoss Meter-in / Meter-out PVG technology may be used.

Check valves and sufficient charge pressure supply are also possible.

At no time shall the motor be allowed to operate above the rated speed limits. If flow limiter valves are used, they must be selected accordingly. Select Motor controls which use the high loop system pressure to shift the servo piston. This ensures proper function under all conditions.

Valve blocks, such as counter balance valves attached to the inlet and/or outlet ports, must not interfere with any part of the motor. A review of the outline drawings or appropriate 3D models must be completed.

Fluid specifications

Fluid specifications

Features		Unit	All sizes
Viscosity	**Minimum intermittent**	mm^2/s [SUS]	7 [49]
	Recommended range		12-80 [66-366]
	Maximum intermittent		1600 [7416]
Temperature range[1)2)]	**Minimum**	°C [°F]	-40 [-40]
	Rated		104 [220]
	Maximum intermittent		115 [240]
Cleanliness and Filtration	**Required cleanliness per ISO 4406**	-	22/18/13
	Efficiency (charge pressure filtration)	β-ratio	$\beta_{15-20} = 75$ ($\beta_{10} \geq 10$)
	Efficiency (suction / return line filtration)		$\beta_{35-45} = 75$ ($\beta_{10} \geq 2$)
	Recommended inlet screen mesh size	µm	100 – 125

[1)] At the hottest point, normally case drain port.

[2)] Minimum: cold start, short term t<3 min, p<50 bar, n<1000 rpm.

Technical specifications

Determination of nominal motor size

Based on SI units

$$Q_e = \frac{V_g \cdot n}{1000 \cdot \eta_v}$$

$$M_e = \frac{V_g \cdot \Delta p \cdot \eta_{mh}}{20 \cdot \pi}$$

$$P_e = \frac{M_e \cdot n}{9550} = \frac{Q_e \cdot \Delta p \cdot \eta_t}{600}$$

$$n = \frac{Q_e \cdot 1000 \cdot \eta_v}{V_g}$$

Where:

Q_e	Input flow (l/min)
M_e	Output torque (N•m)
P_e	Output power (kW)
n	Speed (min^{-1})
V_g	Motor displacement per rev. (cm^3/rev)
p_{high}	High pressure (bar)
p_{low}	Low pressure (bar)
Δp	High pressure minus Low pressure (bar)
η_v	Motor volumetric efficiency
η_{mh}	Mechanical-hydraulic efficiency
η_t	Motor total efficiency ($\eta_v \cdot \eta_{mh}$)

Based on US units

$$Q_e = \frac{V_g \cdot n}{231 \cdot \eta_v}$$

$$M_e = \frac{V_g \cdot \Delta p \cdot \eta_{mh}}{2 \cdot \pi}$$

$$P_e = \frac{V_g \cdot n \cdot \Delta p \cdot \eta_t}{396\,000}$$

$$n = \frac{Q_e \cdot 231 \cdot \eta_v}{V_g}$$

Where:

Q_e	Input flow [US gal/min]
M_e	Output torque [lb•in]
P_e	Output power [hp]
n	Speed [rpm]
V_g	Motor displacement per rev. [in^3/rev]
p_{high}	High pressure [psi]
p_{low}	Low pressure [psi]
Δp	High pressure minus Low pressure [psi]
η_v	Motor volumetric efficiency
η_{mh}	Mechanical-hydraulic efficiency
η_t	Motor total efficiency ($\eta_v \cdot \eta_{mh}$)

Operation

Shaft rotation direction

Shaft rotation direction is determined with a view from the shaft end.

Rotation direction of the motor will be dependent on the control option used as illustrated below.

In the second number or letter of the control code, 1 means 12 V_{DC}, 2 means 24 V_{DC}, and H means hydraulic.

Controls L1, L2, D1, D2, LH, DH

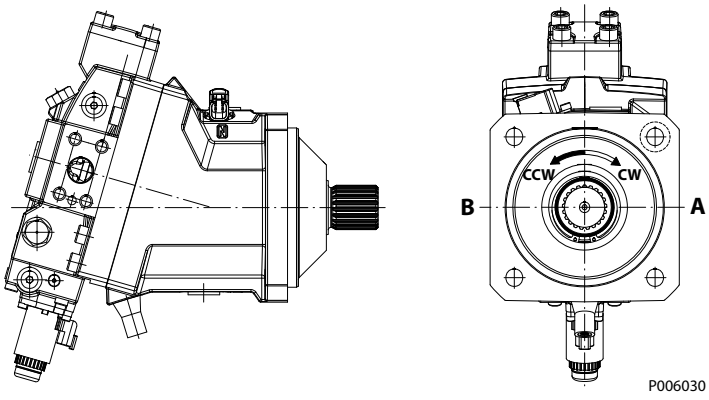

Flow into port A	Clockwise
Flow into port B	Counterclockwise

Controls M1, M2, K1, K2, KH, MH

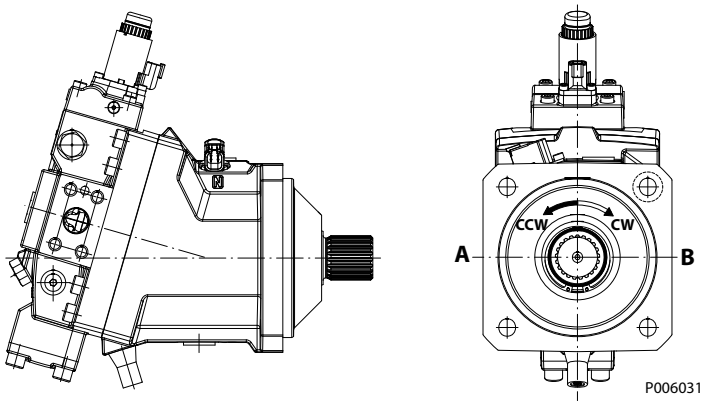

Flow into port A	Counterclockwise
Flow into port B	Clockwise

Operation

Controls E1, E2, F1, F2, P1, P2, T1, T2, TA, TH, HE, HF

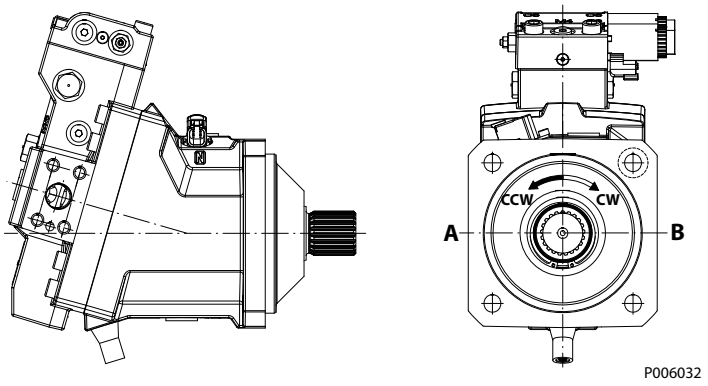

Flow into port A	Counterclockwise
Flow into port B	Clockwise

Operation

Loop flushing shuttle spool

An integral loop flushing shuttle spool is used to separate system A and system B pressures.

System delta pressure will cause the shuttle spool to shift, allowing the low side system pressure to flow to the loop flushing relief valve.

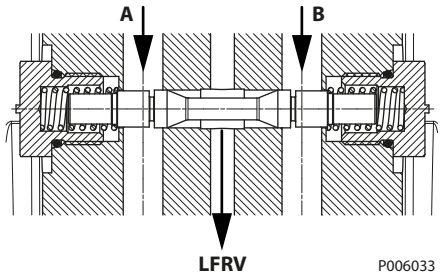

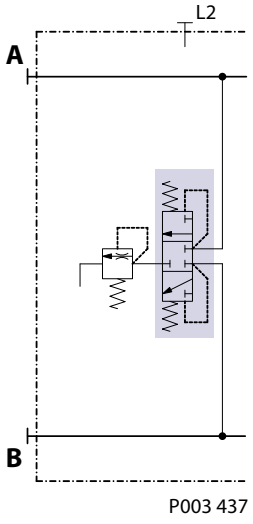

Legend:

A	System loop A
B	System loop B
LFRV	to Loop flushing relief valve

Warning

Unintended vehicle or machine movement hazard.

Excessive motor loop flushing flow may result in the inability to build required system pressure in some conditions. Maintain correct charge pressure under all conditions of operation to maintain pump control performance in hydrostatic systems.

Operation

Loop flushing relief valve

The loop flushing relief valve is incorporated into all H1 motors and uses the loop flushing option in installations that require fluid to be removed from the low pressure side of the system circuit due to cooling requirements.

The loop flushing relief valve is also used to facilitate the removal of contaminants from the loop.

The loop flushing valve is equipped with an orificed charge pressure relief valve designed with a cracking pressure of 16 bar [232 psi].

Valves are available with several orifice sizes to meet the flushing flow requirements of all system operating conditions.

Loop flushing relief valve (cross section)

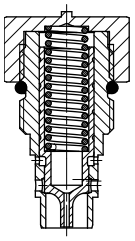

P003 491

Loop flushing relief valve schematic

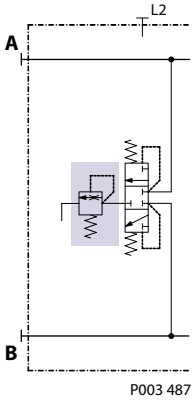

P003 487

Loop flushing relief valve sizes

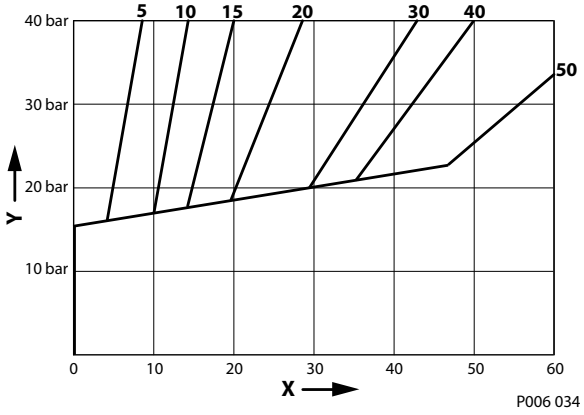

P006 034

X Loop flushing flow (l/min)

Y Low system pressure minus case pressure (bar)

Displacement limiter

All Series H1 motors incorporate mechanical displacement limiters.

The minimum displacement of the motor is preset at the factory with a set screw in the motor housing. A tamper-proof cap is provided.

For 0° motors, the minimum displacement screw can be substituted with a plug that uses less space.

Operation

Speed sensor

The speed sensor is designed for rugged outdoor, mobile or heavy industrial speed sensing applications. The detection of the speed is contactless and does not need any calibration or adjustments.

For more information, see *Speed and Temperature Sensor, Technical Information,* **BC152886482203**.

Temperature Range

Parameter	Minimum	Maximum
Operation temperature range	-40 °C	104 °C

115°C intermittent = short term; t < 1min per incident and not exceeding 2 % of duty cycle based load-life.

Protection Characteristics

Parameter	Data
Protection Code (IP class) according IEC 60529 and DIN 40050	IP 67 (without connector installed) IP 69k (with connector installed)
EMC Emission	EN 61000-6-3
EMC Immunity (EMI)	100 V/m incl. 1 kHz AM 80 %; ISO 11452-5 and -2
ESD	EN 61000-4-2 Air discharge: 15 kV Contact discharge: 8 kV
Vibration	30 G (294 m/s^2)
Shock	50 G (490 m/s^2)
Case maximum pressure	5 bar [72.5 psi]

Mating connectors

There are available two types of mating connectors Assembly Bag DEUTSCH DTM06-6S, Black and Grey.

Ordering number	
11033865	**11033863**
Assembly Bag, DEUTSCH DTM06-6S-E004; black, (24-20 AWG) 0.21 -0.52 mm^2	Assembly Bag, DEUTSCH DTM06-6S, gray, (24-20 AWG) 0.21 -0.52 mm^2

Available Sensors

There are two speed sensors available according to different supply voltage range: 4.5 to 8 V_{DC} and 7 to 32 V_{DC}.

Description	Order number	
	149055	**11232698**
Supply voltage	4.5 – 8 V	7 – 32 V
Speed signals	Two, 90° Phase shift	Two, 90° Phase shift
Direction signal	One	One
Temperature signal	One	One

For more information, see below.

Operation

Speed sensor 4.5 – 8 V

Speed sensor connector, 6-pin

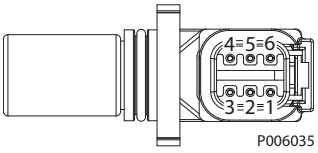

1. Speed signal 2
2. Direction signal
3. Speed signal 1
4. Supply
5. Ground
6. Temperature

Technical data

Parameter	Min.	Nom.	Max.	Note
Supply voltage	4.5 V_{DC}	5 V_{DC}	8 V_{DC}	Regulated supply voltage. Reverse polarity protected.
Supply protection	–	–	30 V_{DC}	Shuts off above 9 V.
Max. required supply current	–	–	25 mA	At supply voltage
Max. output current	–	–	50 mA	
Operation mode	**NPN & PNP**			Push-Pull amplifier
Temperature signal	-40°C = 2.318V	–	100°C = 0.675V	
Output low	5 %	8.5 %	12 %	Ratiometric output voltage Low state > 0 V to provide wire fault detection
Output high	88 %	91.5 %	95 %	
Detectable frequency range	1 Hz	–	10 000 Hz	
Ordering number	**149055**			
Color of connector	Black			

Speed Sensor 7 - 32 V

Speed Sensor 7 – 32 V_{DC} technical data and information about connector.

Speed sensor connector, 6-pin

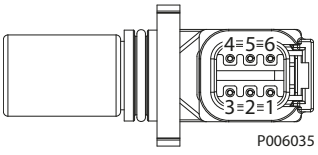

Pinout:
1. Speed signal 2
2. Direction signal
3. Speed signal 1
4. Supply
5. Ground
6. Temperature signal

Technical data

Parameter	Min.	Max.	Note	
Supply voltage range	7 V_{DC}	32 V_{DC}		
Supply protection	–	36 V_{DC}	36 V_{DC} over voltage protection -36 V_{DC} permanent reverse polarity protection	
Max. required supply current	–	30 mA		
Max. output current	–	50 mA		

Operation

Technical data (continued)

Parameter	Min.	Max.	Note	
Operation mode	**NPN open collector**		Internal 2k7 pull-up resistor to supply	
Temperature signal	-40°C = 2.318V–		100°C = 0.675V	
Output low signal range	2 %	8%	Max. output voltage 24 V_{DC}	
Output high signal range	55 %	85 %		
Detectable frequency range	1 Hz	10 000 Hz		
Speed sensor order number	11232698			
Color of connector	Yellow			

Sensor position

Sensor position in SAE, DIN and Cartridge housing.

SAE and DIN housing

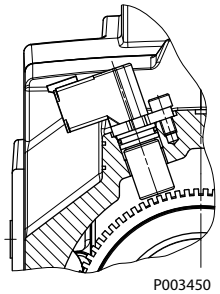

Cartridge housing

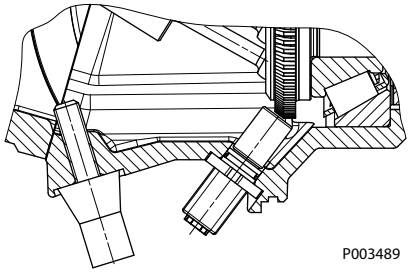

Target Ring

Speed (target) rings vary according to the diameter of the cylinder block or shaft on which they are installed. The number of teeth is shown in the table below.

The number of speed (target) ring teeth

H1B and H1F size	060	080	110	160	210	250
Teeth	71	78	86	95	104	108

Excessive axial shaft loading during installation of motors with speed sensors and cartridge housings must be avoided. High axial shaft loads during installation of motors can lead to a movement of the shaft and damage the speed sensor.

Operating parameters

Output speed

Start and low speed stability. The motor produces maximum starting torque at maximum displacement. Stable operation can be achieved at 15–34 rpm, ± 5 %, depending on system pressure, in applications that require low speed stability. Motor output speed becomes more stable as speed increases.

Rated speed is the highest output speed recommended at full power condition. Operating at, or below this speed will yield satisfactory product life.

Maximum speed is the highest operating speed permitted. Exceeding maximum speed reduces the product life and can cause loss of hydrostatic power and dynamic braking capacity. Never exceed the maximum speed limit under any operating conditions.

Operation between rated and maximum speed is reserved for **intermittent operation** (see *H1B speed range diagrams for open and closed circuit* on page 13) not to exceed 10 minutes durations, 2% of duty cycle based load-life, and 310 bar system delta pressure. Speed above rated are anticipated to occur during downhill braking (negative power). Contact factory for any operation above Rated speed when negative power is not involved.

During hydraulic braking and downhill conditions, the prime mover must be capable of providing sufficient braking torque in order to avoid pump over speed. This is especially important to consider for turbocharged and Tier 4 engines.

Warning

Unintended vehicle or machine movement hazard.

Exceeding maximum speed may cause a loss of hydrostatic drive line power and braking capacity. You must provide a braking system, redundant to the hydrostatic transmission, sufficient to stop and hold the vehicle or machine in the event of hydrostatic drive power loss. The braking system must also be sufficient to hold the machine in place when full power is applied.

Operating parameters

System pressure

System pressure is the differential pressure between high pressure system ports. It is the dominant operating variable affecting hydraulic unit life. High system pressure, which results from high load, reduces expected life. Hydraulic unit life depends on the speed and normal operating, or weighted average, pressure that can only be determined from a duty cycle analysis.

Application pressure is the high pressure relief or pressure limiter setting normally defined within the order code of the pump. This is the applied system pressure at which the driveline generates the maximum calculated pull or torque in the application.

Maximum working pressure is the highest recommended application pressure. Maximum working pressure is not intended to be a continuous pressure. Propel systems with application pressures at, or below, this pressure should yield satisfactory unit life given proper component sizing.

Maximum pressure is the highest allowable application pressure under any circumstance. For applications which are above the maximum working pressure, please contact Danfoss

Minimum pressure must be maintained under all operating conditions to avoid cavitation.

All pressure limits are differential pressures referenced to low loop (charge) pressure. Subtract the low loop gauge pressure from the high loop gauge pressure readings to compute the differential.

Summing pressure is the sum of both the low and high loop pressures. Summing pressure above 30 bar [435 psi] guarantees reliable use within the rated speed.

Servo pressure is the pressure in the servo system and is supplied from the high side of the loop to keep the motor at the required displacement.

Case pressure

Under normal operating conditions, **the rated case pressure** must not be exceeded. During cold start, case pressure must be kept below maximum intermittent case pressure. Size drain plumbing accordingly.

Caution

Possible component damage or leakage.

Operation with case pressure in excess of stated limits may damage seals, gaskets, speed sensors and/or housings, causing external leakage. Performance may also be affected since charge and system pressures are referenced to case pressure.

External shaft seal pressure

In certain applications, the output shaft seal may be exposed to external pressures. The shaft seal is designed to withstand an external pressure up to 0.25 bar [3.6 psi] above the case pressure. The case pressure limits must also be followed to ensure the shaft seal is not damaged.

Operating parameters

Temperature

The high temperature limits apply at the hottest point in the transmission, which is normally the motor case drain. The system should generally be run at or below the published **rated temperature**.

The **maximum intermittent temperature** is based on material properties and should never be exceeded.

Cold oil will generally not affect the durability of the transmission components, but it may affect the ability of oil to flow and transmit power. Therefore, temperatures should remain 16 °C [30 °F] above the pour point of the hydraulic fluid.

The **minimum temperature** relates to the physical properties of component materials.

Size heat exchangers too keep the fluid within these limits. Danfoss recommends testing to verify that these temperature limits are not exceeded.

Viscosity

For maximum efficiency and bearing life, ensure that the fluid viscosity remains in the **recommended range**.

The **minimum viscosity** should be encountered only during brief periods of maximum ambient temperature and severe duty cycle operation.

The **maximum viscosity** should be encountered only at cold start.

System design parameters

Filtration system

To prevent premature wear, ensure that only clean fluid enters the hydrostatic transmission circuit. A filter capable of controlling the fluid cleanliness to ISO 4406, class 22/18/13 (SAE J1165) or better, under normal operating conditions, is recommended.These cleanliness levels cannot be applied for hydraulic fluid residing in the component housing/case or any other cavity upon delivery from the factory.

The filter may be located on the pump (integral) or in another location (remote or suction). The integral filter has a filter bypass sensor to signal the machine operator when the filter requires changing. Filtration strategies include suction or pressure filtration. The selection of the filter strategy depends on a number of factors including the contaminant ingression rate, the generation of contaminants in the system, the required fluid cleanliness, and the desired maintenance interval. Filters are selected to meet the above requirements using rating parameters of efficiency and capacity.

Filter efficiency can be measured with a Beta ratio (β_X). For simple suction-filtered closed circuit transmissions and open circuit transmissions with return line filtration, a filter with a β-ratio within the range of $\beta_{35\text{-}45} = 75$ ($\beta_{10} \geq 2$) or better has been found to be satisfactory. For some open circuit systems, and closed circuits with cylinders being supplied from the same reservoir, a higher filter efficiency is recommended. This also applies to systems with gears or clutches using a common reservoir. For these systems, a charge pressure or return filtration system with a filter β-ratio in the range of $\beta_{15\text{-}20} = 75$ ($\beta_{10} \geq 10$) or better is typically required.

Because each system is unique, only a thorough testing and evaluation program can fully validate the filtration system. For more information, see *Design Guidelines for Hydraulic Fluid Cleanliness, Technical Information* **BC152886482150**.

Filter β_x-ratio is a measure of filter efficiency defined by ISO 4572. It is defined as the ratio of the number of particles greater than a given diameter ("x" in microns) upstream of the filter to the number of these particles downstream of the filter.

Filtration, cleanliness level and β_x-ratio (recommended minimum)

Cleanliness per ISO 4406	22/18/13
Efficiency β_x (charge pressure filtration)	$\beta_{15\text{-}20} = 75$ ($\beta_{10} \geq 10$)
Efficiency β_x (suction and return line filtration)	$\beta_{35\text{-}45} = 75$ ($\beta_{10} \geq 2$)
Recommended inlet screen mesh size	100 – 125 µm

Reservoir

Proper sizing of the hydrostatic system reservoir will allow maximum volume changes during all system operating modes and increase de-aeration of the fluid as it passes through the tank. A suggested minimum total reservoir volume is $^5/_8$ of the maximum charge pump flow per minute with a minimum fluid volume equal to ½ of the maximum charge pump flow per minute. This allows 30 seconds of fluid dwell time for removing entrained air at the maximum return flow. This is usually adequate to allow for a closed reservoir having no breather in most applications.

Locate the reservoir outlet to the charge pump inlet above the bottom of the reservoir to take advantage of gravity separation and prevent large foreign particles from entering the charge inlet line. A 100-125 mesh screen over the reservoir outlet port is recommended. Position the reservoir inlet for the fluid return to discharge below the normal fluid level and toward the interior of the tank. A baffle or baffles, between the inlet and outlet of the reservoir will further increase de-aeration and reduce surging of the fluid.

System design parameters

Fluid Selection

Ratings and performance data are based on operating with hydraulic fluids containing oxidation, rust and foam inhibitors. These fluids must possess good thermal and hydrolytic stability to prevent wear, erosion, and corrosion of motor components.

Caution

Never mix hydraulic fluids of different types.

Case Drain

A case drain line must be connected to the case outlets of each motor to return the internal leakage oil to the system reservoir. When filling the case before start up, use the highest case drain outlet to promote complete filling of the case. The case drain fluid is typically the hottest fluid in the system. It is highly recommended to route the case drain flow through a heat exchanger before it is returned to the reservoir.

In some applications, it may be required to provide additional cross-flushing of the motor. If the motor is used mainly in a high speed application, higher cooling requirements may be needed for the rotating kit and tapered roller bearings. Use the lowest case drain port as the inlet port and the highest case drain port as the outlet port. This will ensure that the case is full of oil at all times.

Apply unit case pressure ratings to case drain routing and design.

Independent braking system

Unintended vehicle or machine movement hazard.
You must provide a braking system, redundant to the hydrostatic transmission, sufficient to stop and hold the vehicle or machine in the event of hydrostatic drive power loss. The braking system must also be sufficient to hold the machine in place when full power is applied.

Bearing loads and life

Bearing life is a function of speed, system pressure, motor angle and any external side or thrust loads. The influence of motor angle includes displacement as well as direction. External side loads are found in some applications such as a helical gear without its own support bearings, installed directly on to the motor shaft. All external side loads will act to reduce the normal bearing life of the motor. Other life factors include oil type and viscosity.

When external side loads are present, the allowable radial shaft loads are a function of the load position relative to the mounting flange, the load orientation relative to the internal loads and the operating pressures of the hydraulic unit. In applications where external shaft loads cannot be avoided, the impact on bearing life can be minimized by proper orientation of the load. Optimal motor orientation is a consideration of the net loading on the shaft from the external load and the motor rotating kit.

Contact Danfoss for a bearing life review if external side loads and thrust loads are present.

Shaft Torque

Available shafts are capable to transmit the maximum torque capability at maximum working pressure. Lubrication or similar treatment of splined motor shaft is recommended for proper torque transmission.

For more information, see **Lubrication of Splined Shafts, Data Sheet, AI152986482538**.

Master Model Code

H1B size, version, port options



H1B frame size

Code	Displacement
060	60 cm^3 [3.66 in^3]
080	80 cm^3 [4.88 in^3]
110	110 cm^3 [6.71 in^3]
160	160 cm^3 [9.76 in^3]
210	210 cm^3 [12.81 in^3]
250	250 cm^3 [15.25 in^3]

A – Product version

A	Revision code

Z – Port configuration

A	Inch, Customer O-ring port sealing according to ISO 11926-1
M	Metric, Customer O-ring port sealing according to ISO 6149-1

Master Model Code

H1B control options



B – electric controls

Code	Port Config (Z)	Control type	Voltage	PCOR	Displacement	Connector
L1	A	Electric Proportional	12 V	—	De-energized = Maximum Displacement	DEUTSCH DT04–2P
	M					
L2	A		24 V	—		
	M					
D1	A		12 V	●		
	M					
D2	A		24 V	●		
	M					
M1	A		12 V	—	De-energized = Minimum Displacement	
	M					
M2	A		24 V	—		
	M					
K1	A		12 V	●		
	M					
K2	A		24 V	●		
	M					
E1	A	Electric 2-position	12 V	—	De-energized = Maximum Displacement	
	M					
E2	A		24 V	—		
	M					
F1	A		12 V	—	De-energized = Minimum Displacement	
	M					
F2	A		24 V	—		
	M					
T1	A		12 V	●		
	M					
T2	A		24 V	●		
	M					
P1	A		12 V	●	De-energized = Minimum Displacement with Electric Proportional PCOR	
	M					
P2	A		24 V	●		
	M					

● = available option, – = not available option

Master Model Code

B – hydraulic controls

Code	Port Config (Z)	Control type	PCOR	Note
DH	A	Hydraulic Proportional	●	External pressure control supply Default (w/o control pressure) = Maximum
LH	A		—	
	M			
MH	A		—	External pressure control supply Default (w/o control pressure) = Minimum
KH	A		●	
HE	A	Hydraulic 2-position	—	External pressure control supply Default (w/o control pressure) = Maximum
	M			
HF	A		—	External pressure control supply Default (w/o control pressure) = Minimum
TH	A		●	
TA	A	PCOR	●	Default (high pressure below PCOR pressure)
	M			

Master Model Code

H1B PCOR and BPD options



C – PCOR and BPD

Code	Port config (Z)	PCOR[1]	BPD	Details	Use with control:
K1	A	●	● Electric 12V	De-energized BPD = PCOR active at port A DEUTSCH DT04-2P connector	K1
K2	A	●	● Electric 24V		K2
M1	A	●	● Electric 12V	De-energized BPD = PCOR active at port B DEUTSCH DT04-2P connector	D1
M2	A	●	● Electric 24V		D2
D1	A	●	● Electric 12V	De-energized BPD = PCOR active at port A DEUTSCH DT04-2P connector	P1, T1, TA
D2	A	●	● Electric 24V		P2, T2, TA
G1	A	●	● Electric 12V	De-energized BPD = PCOR active at port B DEUTSCH DT04-2P connector	P1, T1, TA
G2	A	●	● Electric 24V		P2, T2, TA
AA	A	—	—	—	E*
	M				
BA	A	—	—	—	L*, LH
	M				
CA	A	—	—	—	M*, MH
	M				
DA	A	●	—	—	P*, T*
EA	A	—	—	—	F*
KA	A	●	—	—	K*, KH
MA	A	●	—	—	D*, DH
	M				
HA	A	●	—	Internal servo pressure supply	TH
HB	A	●	● Hydraulic		TH
HE	A	—	—		HE
	M				
HF	A	—	—		HF
	M				
MH	A	●	● Hydraulic	De-energized BPD = PCOR active, port not defined without pilot pressure difference on XA or XB	DH
KH	A	●	● Hydraulic		KH

[1] ● means option is available

Master Model Code

H1B threshold setting, orifice options



D – Threshold setting (Hydraulic adjustment)

Code	Pressure	Code	Pressure
A	2 bar [29 psi]	M	14 bar [203 psi]
B	3 bar [43.5 psi]	O	15 bar [217.6 psi]
C	4 bar [58 psi]	P	16 bar [232.1 psi]
D	5 bar [72.5 psi]	Q	17 bar [246.6 psi]
E	6 bar [87 psi]	R	18 bar [261 psi]
F	7 bar [101.5 psi]	S	19 bar [275.6 psi]
G	8 bar [116 psi]	T	20 bar [290 psi]
H	9 bar [130.5 psi]	U	22 bar [319 psi]
I	10 bar [145 psi]	V	24 bar [348 psi]
J	11 bar [159.5 psi]	W	26 bar [377.1 psi]
K	12 bar [174 psi]	X	28 bar [406.1 psi]
L	13 bar [188.5 psi]	Y	30 bar [435 psi]
N	Non applicable	All options (except N) to be used for DH, LH, MH, KH controls.	

E – Orifices (M4 and M5)

Code	Diameter
A	Ø1.2 mm [0.047 in]
B	Ø0.8 mm [0.031 in]
C	Ø0.6 mm [0.024 in]

Master Model Code

H1B endcap, flange and housing options

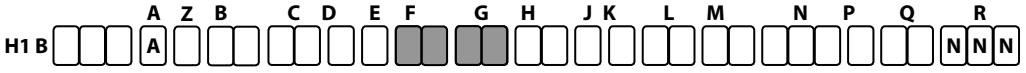

F – End-cap (ISO 6162, type 1)

Code	Compatible controls	Description	Port config (Z)	Port type	060	080	110	160	210	250
PA	Use with controls: L*, LH, D* and DH	Endcap for proportional controls	A	axial port	●	●	●	●	●	●
	Use with controls: L*, LH, D* and DH		M		●	●	●	●	●	●
PB	Use with controls: L*, LH, D* and DH		A	side port	●	●	●	●	●	●
	Use with controls: L*, LH, D* and DH		M		●	●	●	●	●	●
PE	Use with controls: L*, LH, D* and DHto be used with bolt-on Counterbalance valve (CBV)		M	axial port	-	●	●	●	●	●
RA	Use with controls: M*, MH, K* and KH		A	axial port	●	●	●	●	●	●
	Use with controls: M*, MH, K* and KH		M		●	●	●	-	-	-
RB	Use with controls: M*, MH, K* and KH		A	side port	●	●	●	●	●	●
	Use with controls: M*, MH, K* and KH		M		●	●	●	-	-	-
RK	Use with controls: M*, MH, K* and KH to be used with bolt-on Counterbalance valve (CBV)		M	axial port	-	-	-	●	-	-
TA	Use with controls: E*, F*, H*, T*, P*, TH, HE and HF	Endcap for 2-position and PCOR controls	A	axial port	●	●	●	●	●	●
	Use with controls: E*, F*, H*, T*, P*, TH, HE and HF		M		-	-	●	●	-	●
TB	Use with controls: E*, F*, H*, T*, P*, TH, HE and HF		A	side port	●	●	●	●	●	●
	Use with controls: E*, F*, H*, T*, P*, TH, HE and HF		M		●	-	●	-	-	-
TC	Use with controls: E*, F*, H*, T*, P*, TH, HE and HF for use with bolt-on Counterbalance valve (CBV)		M	axial port	-	●	●	●	●	●

G – Flange and housing

Code	Port Config (Z)	Description	060	080	110	160	210	250
VN	A	SAE flange motor housing (ISO 3019/1), no speed sensor port	●	●	●	●	●	●
	M		●	–	–	–	–	●
DN	A	DIN flange motor housing (ISO 3019/2), no speed sensor port	●	●	●	●	●	●
	M		–	●	●	–	–	●
CN	A	Cartridge flange motor housing, no speed sensor port	●	●	●	●	–	–
	M		–	–	●	●	–	–
VS	A	SAE flange motor housing (ISO 3019/1), with speed sensor port	●	●	●	●	●	●
	M		–	●	●	●	●	●
DS	A	DIN flange motor housing (ISO 3019/2), with speed sensor port	●	●	●	●	●	●
	M		●	●	●	●	●	●

Master Model Code

G – Flange and housing (continued)

Code	Port Config (Z)	Description	060	080	110	160	210	250
CS	A	Cartridge flange motor housing, with speed sensor port	●	●	●	●	–	–
	M		●	●	●	●	–	–

Master Model Code

H1B shaft, sensor, loop flushing shuttle system options

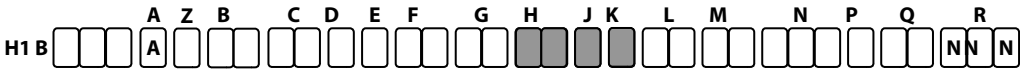

H – Shaft options according to speed ring

Code	Speed ring	Description	060	080	110	160	210	250
AN	No	14 teeth 12/24 pitch ANSI 92.1 1970 class 5	●	●	–	–	–	–
AS	Yes							
BN	No	21 teeth 16/32 pitch ANSI 92.1 1970 class 5	●	●	–	–	–	–
BS	Yes							
CN	No	23 teeth 16/32 pitch ANSI 92.1 1970 class 5	–	●	–	–	–	–
CS	Yes							
DN	No	27 teeth 16/32 pitch ANSI 92.1 1970 class 5	–	–	●	●	●	●
DS	Yes							
EN	No	13 teeth 8/16 pitch ANSI 92.1 1970 class 5	–	–	●	●	–	–
ES	Yes							
FN	No	15 teeth 8/16 pitch ANSI 92.1 1970 class 5	–	–	–	●	●	●
FS	Yes							
GN	No	W30x2x30x14x9g DIN 5480	●	–	–	–	–	–
GS	Yes							
HN	No	W35x2x30x16x9g DIN 5480	●	●	–	–	–	–
HS	Yes							
JN	No	W40x2x30x18x9g DIN 5480	–	●	●	–	–	–
JS	Yes							
KN	No	W45x2x30x21x9g DIN 5480	–	–	●	●	–	–
KS	Yes							
LN	No	W50x2x30x24x9g DIN 5480	–	–	–	●	●	●
LS	Yes							

J – Sensor

N	No speed sensor
B	Speed sensor, 7 V to 32 V, DEUTSCH DTM04-6P connector
S	Speed sensor, 4.5 V to 8 V,DEUTSCH DTM 04-6P connector
P	Speed sensor ready (plugged)

K – Loop flushing shuttle system

Code	Description	060	080	110	160	210	250
A	Standard 6.5 bar [94 psi] shift pressure	●	●	●	●	●	●
B	12.5 bar [181 psi] shift pressure	–	–	●	●	●	●
N	No loop flushing function	●	●	●	●	●	●
W*	No loop flushing function, w/o parts	●	●	●	●	●	●

* Only in conjunction with Endcap **PE** or **TC**

Master Model Code

H1B loop flushing, special hardware options



L – Loop flushing relief valve (non-adjustable)

Code	Flow	060	080	110	160	210	250
05	5 l/min [1.321 US gal/min], 16 bar [232 psi] cracking pressure	●	●	–	–	–	–
10	10 l/min [2.642 US gal/min], 16 bar [232 psi] cracking pressure	●	●	●	–	–	–
15	15 l/min [3.963 US gal/min], 16 bar [232 psi] cracking pressure	–	–	●	–	–	–
20	20 l/min [5.283 US gal/min], 16 bar [232 psi] cracking pressure	–	–	–	●	●	●
30	30 l/min [7.925 US gal/min], 16 bar [232 psi] cracking pressure	–	–	–	●	●	●
40*	40 l/min [10.567 US gal/min], 16 bar [232 psi] cracking pressure	–	–	–	●	●	●
50*	50 l/min [13.209 US gal/min], 16 bar [232 psi] cracking pressure	–	–	–	●	●	●
NN	No loop flushing function	●	●	●	●	●	●
WN**	No loop flushing function, w/o parts	●	●	●	●	●	●

* Only in conjunction with loop flushing shuttle system **B**

** Only in conjunction with loop flushing system **W**

M – Special hardware feature

AN	Special hardware for 2-pos. controls **
AP	Special hardware for proportional controls **
NN	Standard hardware for 2-pos. controls
NP	Standard hardware for proportional controls*

** For information on when to use this option , See *H1B speed range diagrams for open and closed circuit* on page 13

* Motors build before March 2018 will have the NN in the Model code and will be updated automatically

Master Model Code

H1B minimum and maximum displacement options



N – Minimum displacement

Code	Description	Compatible frame size
XXX	000 or 012 to 040 cm^3/rev minimum displacement setting	60cc
	000 or 016 to 054 cm^3/rev minimum displacement setting	80cc
	000 or 022 to 074 cm^3/rev minimum displacement setting	110cc
	000 or 032 to 108 cm^3/rev minimum displacement setting	160cc
	000 or 042 to 142 cm^3/rev minimum displacement setting	210cc
	000 or 050 to 169 cm^3/rev minimum displacement setting	250cc
MB0	Plug (replaces minimum displacement limiter screw for 0° motors)	All
00A	000 cm3/rev with adjustment screw for minimum displacement setting	All

P – Maximum displacement (non adjustable)

Code	Displacement	Use with controls:	060	080	110	160	210	250
N	100 % max.	L*, M*, K* and D*	●	●	●	●	●	●
A	95 % max.	L* and D*	●	●	–	–	●	–
B	90 % max.		–	–	●	●	–	●
C	85 % max.		–	●	●	–	–	●
D	80% max.		–	–	–	–	●	–
E	75 % max.		●	–	●	–	–	●
Z	100 % max.	E*, F*, H*, T* and P*	●	●	●	●	●	●
Q	95 % max. displacement		●	●	●	●	●	●
R	90 % max.	E*, F*, H*, T* and P*	●	●	●	●	●	●
S	85 % max.		●	●	●	●	●	●
T	80 % max.	E*, F*, H*, T* and P*	●	●	●	●	●	●
U	75 % max.		●	●	●	●	●	–
V	65 % max.	E*, F*, H*, T* and P*	●	–	–	–	–	–

Master Model Code

H1B PCOR pressure, paint and nametag options



Q – PCOR pressure setting

Code	Pressure setting	Code	Pressure setting
00	For all controls without PCOR function	23	230 bar [3336 psi]
16	160 bar [2321 psi]	24*	240 bar [3481 psi] – Standard setting
17	170 bar [2466 psi]	25	250 bar [3626 psi]
18	180 bar [2611 psi]	26	260 bar [3771 psi]
19	190 bar [2756 psi]	27	270 bar [3916 psi]
20	200 bar [2901 psi]	28	280 bar [4061 psi]
21	210 bar [3046 psi]	29	290 bar [4206 psi]
22	220 bar [3191 psi]	30	300 bar [4351 psi]

* Standard setting at production test for **P*** controls:
- 800 mA for **P1**
- 400 mA for **P2**

R – Paint and nametag

NNN	Black paint and nametag

Control operation and description

Electric controls

Motor displacement can be changed electro hydraulically under load in response to an electrical signal from maximum displacement to minimum displacement and vice versa. Under some circumstances, such as contamination, the control spool could stick and cause the motor to stay at some displacement.

Electric proportional controls

The electric proportional control consists of a proportional solenoid which acts directly on a two-position, three-way porting spool. When activated, the solenoid pushes on the spool which then ports high pressure to the larger diameter of the servo piston. The servo piston and rotating group move to change the displacement to the point where the pressures on the servo are in balance with the force from the feedback spring.

De-energized = maximum displacement

With a de-energized to maximum displacement control, the de-energized proportional valve keeps the motor at maximum displacement. When energized, the solenoid pushes on the porting spool which moves to port high system pressure to the larger diameter end of the servo piston. Depending on the current supplied to the proportional valve, the motor will stroke between maximum displacement at zero current and minimum displacement at maximum current.

De-energized = minimum displacement

With a de-energized to minimum displacement control, the de-energized proportional valve keeps the motor at minimum displacement. When energized, the solenoid pushes on the porting spool which moves to port high system pressure to the larger diameter end of the servo piston. Depending on the current supplied to the proportional valve, the motor will stroke between minimum displacement at zero current and maximum displacement at maximum current.

Electric two-position controls

The electric two-position control consists of an off/on-solenoid which acts on a two position, three-way porting spool. Servo pressure is internally supplied to the two-position porting spool by an integral system pressure shuttle.

De-energized = maximum displacement

When the solenoid is de-energized, the motor runs at maximum displacement. When energized, the solenoid applies a force on the spool which ports high pressure to the larger diameter of the servo piston and strokes the motor to minimum displacement. When the solenoid is de-energized, the motor strokes back to maximum displacement.

De-energized = minimum displacement

When the solenoid is de-energized, the motor runs at minimum displacement. When energized, the solenoid applies a force on the spool which ports the larger diameter of the servo piston to tank, and strokes the motor to maximum displacement. When the solenoid is de-energized, the motor strokes back to minimum displacement.

Servo supply

The system shuttle check valve supplies the control system with high system pressure. A minimum servo supply pressure (high system pressure) of 20 bar above case pressure is required to shift the motor displacement.

Control operation and description

Control options

To enhance the performance of our motors, several options are available to augment the performance of the control system. These control enhancements include:

- Pressure Compensator Over Ride, **PCOR**
- Proportional Pressure Compensator Over Ride, **PPCOR** and
- Brake Pressure Defeat, **BPD**

PCOR

The de-energized electric control keeps the motor at minimum displacement.

The electric control can be overridden by the PCOR using high loop system pressure. When the system pressure rises above the PCOR setting, the PCOR override will be activated. The motor then increases to maximum displacement.

The motor displacement is regulated automatically between minimum and maximum in response to the high loop pressure. This ensures optimal power throughout the entire displacement range of the motor.

The pressure compensator control can also be overridden with an electric off/on-solenoid option. When the solenoid is energized, the motor strokes to maximum displacement and stays at that position until the solenoid is de-energized.

Electric proportional with PCOR

In the de-energized state, the electric proportional control keeps the motor at minimum displacement until system pressure rises above the PCOR setting. When the PCOR activates, it ports high system pressure to the larger end of the servo piston, increasing the motor displacement to maximum.

Electric two-position with PCOR

In the de-energized state, the electric two-position control supplies both sides of the servo piston and keeps the motor at minimum displacement as long as the high loop pressure remains below the pressure compensator setting. If the high loop pressure rises above the pressure compensator setting, the porting spool ports the larger diameter of the servo piston to tank. The motor strokes in the direction of maximum displacement.

Electric two-position with proportional PCOR

The PPCOR valve consists of an electric proportional solenoid and a two-position, three-way porting spool with an adjustable spring force on the opposite end of the spool. Maximum signal current to the proportional solenoid overrides the pressure compensator and strokes the motor to maximum displacement. The proportional solenoid changes the pressure compensator setting to allow different, on the go, settings.

The solenoid and the high system pressure work against the spring on the end of the two-position, three-way porting spool. With decreased signal current on the proportional solenoid, the reduction of the forces from the proportional solenoid cause an increased pressure compensator setting for the high system pressure and consequently provides a proportional pressure compensator.

During production test, the PPCOR setting is adjusted to 240 bar with the adjusting screw on the control housing in reference to input current of:

- 800 mA for P1 (12 V)
- 400 mA for P2 (24 V)

Control operation and description

Hydraulic controls

Motor displacement can be changed hydraulically, under load, from maximum to minimum displacement and vice versa in response to an external hydraulic signal.

Hydraulic proportional control

The hydraulic proportional control consists of a proportional hydraulic actuator which acts directly on a two-position, three-way porting spool. It uses an external source for control pressure supply. When pressurizing, the hydraulic actuator pushes the spool which then ports high pressure to the larger diameter of the servo piston. The servo piston and rotating group move to change the displacement to the point where the pressures on the servo are in balance with the force from the feedback spring.

De-energized = maximum displacement

With a de-energized (not pressurized) to maximum displacement control, the de-energized proportional valve keeps the motor at maximum displacement.

When energized, the hydraulic actuator pushes on the porting spool which moves to port high system pressure to the larger diameter end of the servo piston.

Depending on the pressure level supplied to the proportional actuator, the motor will stroke between maximum displacement at start pressure setting and minimum displacement at maximum pressure setting.

De-energized = minimum displacement

With a de-energized (not pressurized) to minimum displacement control, the de-energized proportional valve keeps the motor at minimum displacement.

When energized, the hydraulic actuator pushes on the porting spool which moves to port high system pressure to the larger diameter end of the servo piston.

Depending on the pressure level supplied to the proportional valve, the motor will stroke between minimum displacement at start pressure setting and maximum displacement at maximum spressure setting.

Hydraulic two-position control

The hydraulic two-position control uses an external source for control pressure supply (e. g. charge pressure). This control pressure acts on a two position, three-way porting spool. Servo pressure is internally supplied to the two-position porting spool by an integral system shuttle check valve.

Default (without control pressure) = maximum displacement

With no control pressure applied, the motor operates at maximum displacement.

When control pressure is applied, the spool shifts, porting high system pressure to the large diameter end of the servo piston, shifting the motor to minimum displacement.

When the control pressure is removed, spring forces move the spool, allowing the large diameter end of the servo piston to drain to tank, shifting the motor to maximum displacement.

Default (without control pressure) = minimum displacement

With no control pressure applied, the motor operates at minimum displacement.

When control pressure is applied, the spool shifts, porting the large diameter end of the servo piston to tank, shifting the motor to maximum displacement.

When the control pressure is removed, spring forces move the spool, porting high pressure to the large diameter end of the servo piston, shifting the motor to minimum displacement.

Control operation and description

Hydraulic proportional with PCOR

In the energized (pressurized) state, the hydraulic proportional control keeps the motor at minimum displacement until system pressure rises above the PCOR setting.

When the PCOR activates, it ports high system pressure to the larger end of the servo piston, increasing the motor displacement to maximum.

Hydraulic two-position with PCOR

In the non-pressurized state, the hydraulic two-position control supplies both sides of the servo piston and keeps the motor at minimum displacement as long as the high loop pressure remains below the pressure compensator setting.

If the high loop pressure rises above the pressure compensator setting, the porting spool ports the larger diameter of the servo piston to tank.

The motor strokes in the direction of maximum displacement.

Brake Pressure Defeat (BPD)

For propel applications, use the electric or hydraulic BPD option in conjunction with the PCOR option.

Electric BPD

For propel applications, use the electric BPD option in conjunction with the PCOR option. The BPD shuttle valve is located ahead of the pressure compensator control valve.

The BPD consists of an electric off/on solenoid and a two-position, three-way porting spool. The applied logic allows the pressure compensator control to operate normally with high loop system pressure during acceleration and cuts off the supply pressure during deceleration if the motor is running in a pump mode (includes deceleration or overrun). This prevents rapid or uncontrolled deceleration while the machine is slowing down. With the BPD solenoid de-energized, the porting spool is centered by spring force.

The BPD solenoid must be controlled by a direction lever switch or an output signal from a micro-controller.

Electric solenoid connector

DEUTSCH connector, 2-pin

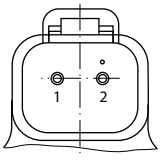

P003 480

Connector ordering data

Description	Quantity	Ordering data
Mating connector	1	DEUTSCH DT06-2S
Wedge lock	1	DEUTSCH W2S
Socket contact (16 and 18 AWG)	2	DEUTSCH 0462-201-16141
Danfoss mating connector kit	1	K29657

Control operation and description

Hydraulic BPD

The BPD shuttle valve is located ahead of the pressure compensator control valve. The BPD function consists of an external pressure supply which acts on a two-position, three-way porting spool. The applied logic allows the pressure compensator control to operate normally with high loop system pressure during acceleration and cuts off the supply pressure during deceleration if the motor is running in pump mode. This prevents rapid or uncontrolled deceleration while the machine is slowing down. When pilot pressure difference on the control pressure ports of the BPD is too low the position of the porting spool is not defined.

H1B control response

H1 controls are available with orifices to assist in matching the rate of stroking time from maximum displacement (100 %) to minimum displacement (20 %) and vice versa to application requirements.

Stroking times for other pressure levels could be calculated at simulation model of request.

Typical response times shown below at the following conditions:

System and charge pressure = 210 bar [3046 psi] and 20 bar [290 psi]
Viscosity and temperature = 20 mm^2/s [97 SUS] and 60°C [140°F]
Speed = 1500 min^{-1} (rpm)

H1B typical response times

Orifice	Stroking direction	Size					
		060	080	110	160	210	250
Ø0.6 mm [Dia 0.02 in]	Max. to min.	0.70 s	1.04 s	1.31 s	1.97 s	2.15 s	2.21 s
	Min. to max.	0.75 s	1.04 s	1.41 s	2.03 s	2.23 s	2.30 s
Ø0.8 mm [Dia 0.03 in]	Max. to min.	0.41 s	0.61 s	0.76 s	1.14 s	1.25 s	1.28 s
	Min. to max.	0.44 s	0.60 s	0.81 s	1.16 s	1.27 s	1.31 s
Ø1.2 mm [Dia 0.05 in]	Max. to min.	0.22 s	0.32 s	0.40 s	0.59 s	0.65 s	0.67 s
	Min. to max.	0.24 s	0.32 s	0.43 s	0.60 s	0.66 s	0.69 s

Control operation and description

Applications related to controls

The following table is provided to assist in selecting controls for various applications. The recommendation is based on experience with a wide range of applications.

Selecting controls for various applications

Application	Control / PCOR, BPD options																		
	L* BA	D* MA	D* M*	M* CA	K* K*	K* KA	E* AA	F* EA	TA DA	TA D*	T* D*	P* D*	T* DA	P* DA	HE HE	HF HF	LH BA	DH MA	DH MH
Wheel loader[1]			●		●						●	●			●				●
Roller compactor[1]							●	●							●				
Paver-wheeled[1]							●	●											●
Paver-tracked[1]							●	●											
Crawler[1]	●																	●	
Sweeper[1]					●						●	●							●
Trencher[1]	●																●		●
Fork lift truck[1]			●		●					●		●							
Agricultural[1]	●				●				●							●			●
Wheel assist[1]			●	●						●						●			
Forestry[1]					●														●
Tele-handler[1]					●							●							
Railroad[1]			●				●	●		●	●								●
Snow groomer[1]	●																●		
Snow blower[2]						●							●	●					
Crane[3]	●						●												
Crusher/Shredder[4]		●				●			●				●	●					

[1] Propel function

[2] Blow drive function

[3] Winch function

[4] Roll function

***** means option **1** = 12 V_{DC} or **2** = 24 V_{DC}

Electric proportional and two-position controls

L1BA and L2BA options

L1 – electric proportional 12 V / **de-energized = max. displacement**
BA – without Pressure Compensator Over Ride / without Brake Pressure Defeat

L2 – electric proportional 24 V / **de-energized = max. displacement**
BA – without Pressure Compensator Over Ride / without Brake Pressure Defeat

Hydraulic schematic

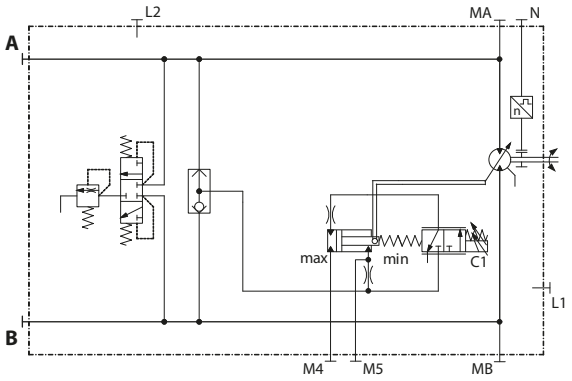

Options L1BA, L2BA



Solenoid C1
De-energized = max. displacement
Full-energized = min. displacement

A, B	Main pressure lines
L1, L2	Drain lines
M4, M5	Gauge port servo pressure
MA, MB	Gauge port system pressure
N	Speed sensor (optional)

Displacement (%) versus Input Command (mA)

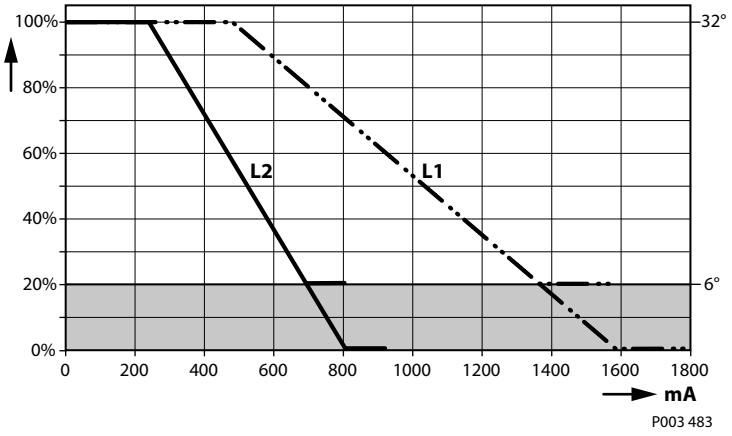

L1, L2 = L1, L2 Control
Grey area = Intended to be used for zero degree capability.

Formulas how to calculate start and end input command (mA) dependent on displacements

Input command (mA)	% displ.	Control *1	Control *2
Start input command	from 100 %	480 ± 10	240 ± 5
	from y % max.	$(1 - V_{gy}/V_{gmax}) \times 1110 + 480$	$(1 - V_{gy}/V_{gmax}) \times 570 + 240$

Electric proportional and two-position controls

Formulas how to calculate start and end input command (mA) dependent on displacements (continued)

Input command (mA)	% displ.	Control *1	Control *2
End input command	at 0 %	1590 ± 130	810 ± 67
	at x % min.	$(1 - V_{gx}/V_{gmax}) \times 1110 + 480$	$(1 - V_{gx}/V_{gmax}) \times 570 + 240$
Maximum allowed current		1800	920

Where:

V_{gmax} Maximum, theoretic possible motor displacement per revolution (cm^3/rev)

V_{gx} Minimum displacement setting of desired unit (cm^3/rev)

V_{gy} Maximum displacement setting of desired unit (cm^3/rev)

x Minimum displacement (%)

y Maximum displacement (%)

Proportional solenoid data C1

Description		12 V	24 V
Maximum current		1800 mA	920 mA
Nominal coil resistance	@ 20 °C [68 °F]	3.7 Ω	14.20 Ω
	@ 80 °C [176 °F]	4.57 Ω	17.52 Ω
Inductance		29 mH	108 mH
PWM signal frequency	Range	70 – 200 Hz	
	Recommended*	150 Hz	
IP Rating	IEC 60 529	IP 67	
	DIN 40 050, part 9	IP 69K with mating connector	
Connector color		Black	

* PWM signal required for optimum control performance.

Warning

Zero degree capability results in a high risk of overspeed and drops in efficiency if the motor operates between 0–20% displacement.

Electric proportional and two-position controls

D1MA and D2MA options with PCOR

D1 – electric proportional 12 V / **de-energized = max. displacement**
MA – with Pressure Compensator Over Ride / without Brake Pressure Defeat

D2 – electric proportional 24 V / **de-energized = max. displacement**
MA – with Pressure Compensator Over Ride / without Brake Pressure Defeat

Caution

This control is not for use in propel applications.

Hydraulic schematic

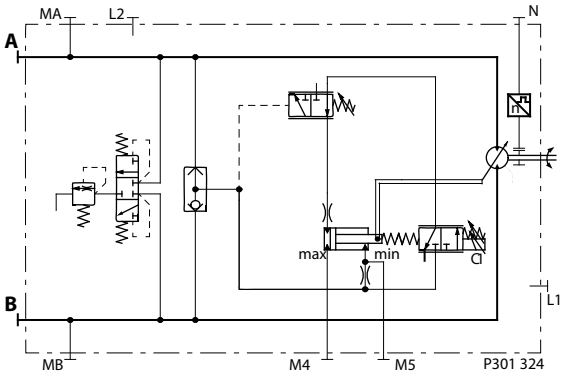

Options D1MA, D2MA



Solenoid C1
De-energized = max. displacement
Full-energized = min. displacement

A, B	Main pressure lines
L1, L2	Drain lines
M4, M5	Gauge port servo pressure
MA, MB	Gauge port system pressure
N	Speed sensor (optional)

Displacement (%) versus Input Command (mA)

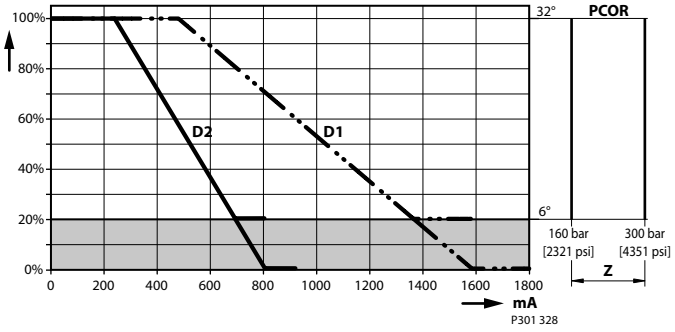

D1, D2 = D1, D2 Control
Z = Start setting range
Grey area = Intended to be used for zero degree capability.

Electric proportional and two-position controls

Formulas how to calculate start and end input command (mA) dependent on displacements

Input command (mA)	% displ.	Control *1	Control *2
Start input command	from 100 %	480 ± 10	240 ± 5
	from y % max.	$(1 - V_{gy}/V_{gmax}) \times 1110 + 480$	$(1 - V_{gy}/V_{gmax}) \times 570 + 240$
End input command	at 0 %	1590 ± 130	810 ± 67
	at x % min.	$(1 - V_{gx}/V_{gmax}) \times 1110 + 480$	$(1 - V_{gx}/V_{gmax}) \times 570 + 240$
Maximum allowed current		1800	920

Where:

V_{gmax} Maximum, theoretic possible motor displacement per revolution (cm^3/rev)

V_{gx} Minimum displacement setting of desired unit (cm^3/rev)

V_{gy} Maximum displacement setting of desired unit (cm^3/rev)

x Minimum displacement (%)

y Maximum displacement (%)

Proportional solenoid data C1

Description		12 V	24 V
Maximum current		1800 mA	920 mA
Nominal coil resistance	@ 20 °C [68 °F]	3.7 Ω	14.20 Ω
	@ 80 °C [176 °F]	4.57 Ω	17.52 Ω
Inductance		29 mH	108 mH
PWM signal frequency	Range	70 – 200 Hz	
	Recommended*	150 Hz	
IP Rating	IEC 60 529	IP 67	
	DIN 40 050, part 9	IP 69K with mating connector	
Connector color		Black	

* PWM signal required for optimum control performance.

Warning

Zero degree capability results in a high risk of overspeed and drops in efficiency if the motor operates between 0–20% displacement.

Electric proportional and two-position controls

D1M1 and D2M2 options with PCOR and electric BPD

D1 – electric proportional 12 V / **de-energized = max. displacement**
M1 – with PCOR / with electric BPD 12 V / de-energized BPD = PCOR active at port B

D2 – electric proportional 24 V / **de-energized = max. displacement**
M2– with PCOR / with electric BPD 24 V / de-energized BPD = PCOR active at port B

Hydraulic schematic

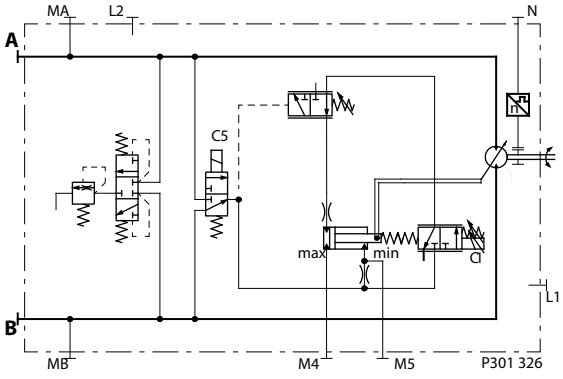

D1M1, D2M2 option



Solenoid C1
De-energized = max. displacement
Full-energized = min. displacement

A, B	Main pressure lines
L1, L2	Drain lines
M4, M5	Gauge port servo pressure
MA, MB	Gauge port system pressure
N	Speed sensor (optional)

Displacement (%) versus Input Command (mA)

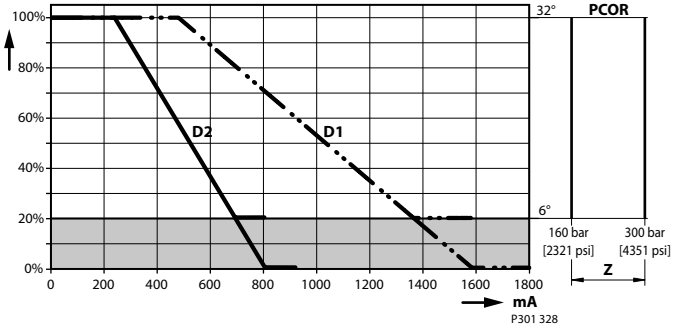

D1, D2 = D1, D2 Control
Z = Start setting range
Grey area = Intended to be used for zero degree capability.

For the formulas to calculate an input command dependent on displacement, please see *D1MA and D2MA options with PCOR* on page 50.

Electric proportional and two-position controls

Proportional control solenoid data C1

Description		12 V	24 V
Maximum current		1800 mA	920 mA
Nominal coil resistance	@ 20 °C [68 °F]	3.7 Ω	14.20 Ω
	@ 80 °C [176 °F]	4.57 Ω	17.52 Ω
Inductance		29 mH	108 mH
PWM signal frequency	Range	70 – 200 Hz	
	Recommended*	150 Hz	
IP Rating	IEC 60 529	IP 67	
	DIN 40 050, part 9	IP 69K with mating connector	
Connector color		Black	

* PWM signal required for optimum control performance.

Two-position solenoid data C5 (Brake pressure defeat)

Description		12 V	24 V
Supply voltage	Minimum	9.5 V_{DC}	19 V_{DC}
	Max. (continuous)	14.6 V_{DC}	29 V_{DC}
Nominal coil resistance @ 20 °C [68 °F]		8.7 Ω	34.5 Ω
Input current	Recommended	1050 mA	500 mA
IP Rating	IEC 60 529	IP 67	
	DIN 40 050, part 9	IP 69K with mating connector	
Bi-directional diode		yes	
Connector color		Blue	

Warning

Zero degree capability results in a high risk of overspeed and drops in efficiency if the motor operates between 0–20% displacement.

Electric proportional and two-position controls

M1CA and M2CA options

M1 – electric proportional 12 V / **de-energized = minimum displacement**
CA – without Pressure Compensator Over Ride / without Brake Pressure Defeat

M2 – electric proportional 24 V / **de-energized = minimum displacement**
CA – without Pressure Compensator Over Ride / without Brake Pressure Defeat

Hydraulic schematic

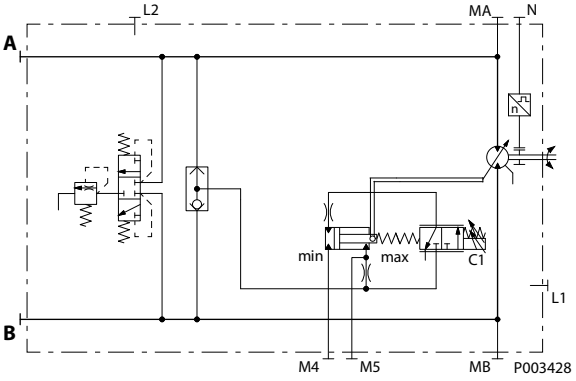

Options: M1CA, M2CA



Solenoid C1
De-energized = min. displacement
Full-energized = max. displacement

A, B	Main pressure lines
L1, L2	Drain lines
M4, M5	Gauge port servo pressure
MA, MB	Gauge port system pressure
N	Speed sensor (optional)

Displacement (%) versus Input Command (mA)

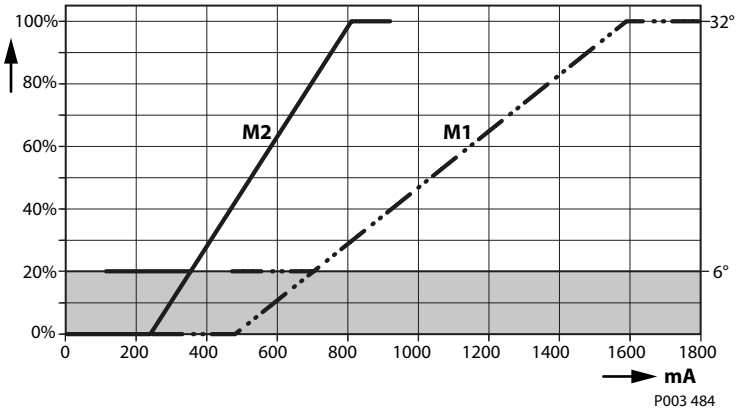

M1, M2 = M1, M2 Control
Grey area = Intended to be used for zero degree capability.

Formulas how to calculate start and end input command (mA) dependent on displacements

Input command (mA)	% displ.	Control *1	Control *2
Start input command	from 0 %	480 ± 10	240 ± 5
	from x % min.	(V_{gx}/V_{gmax}) x 1110 + 480	(V_{gx}/V_{gmax}) x 570 + 240

Electric proportional and two-position controls

Formulas how to calculate start and end input command (mA) dependent on displacements (continued)

Input command (mA)	% displ.	Control *1	Control *2
End input command	at 100 %	1590 ± 130	810 ± 67
	at y % max.	(V_{gy}/V_{gmax}) x 1110 + 480	(V_{gy}/V_{gmax}) x 570 + 240
Maximum allowed current		1800	920

Where:

V_{gmax} Maximum, theoretic possible motor displacement per revolution (cm^3/rev)

V_{gx} Minimum displacement setting of desired unit (cm^3/rev)

V_{gy} Maximum displacement setting of desired unit (cm^3/rev)

x Minimum displacement (%)

y Maximum displacement (%)

Proportional solenoid data C1

Description		12 V	24 V
Maximum current		1800 mA	920 mA
Nominal coil resistance	@ 20 °C [68 °F]	3.7 Ω	14.20 Ω
	@ 80 °C [176 °F]	4.57 Ω	17.52 Ω
Inductance		29 mH	108 mH
PWM signal frequency	Range	70 – 200 Hz	
	Recommended*	150 Hz	
IP Rating	IEC 60 529	IP 67	
	DIN 40 050, part 9	IP 69K with mating connector	
Connector color		Black	

* PWM signal required for optimum control performance.

Warning

Zero degree capability results in a high risk of overspeed and drops in efficiency if the motor operates between 0–20% displacement.

Electric proportional and two-position controls

K1KA and K2KA options with PCOR

K1 – electric proportional 12 V / **de-energized = min. displacement** / with PCOR
KA – with Pressure Compensator Over Ride / without Brake Pressure Defeat

K2 – electric proportional 24 V / **de-energized = min. displacement** / with PCOR
KA – with Pressure Compensator Over Ride / without Brake Pressure Defeat

Warning

This control is not for use in propel applications.

Hydraulic schematic

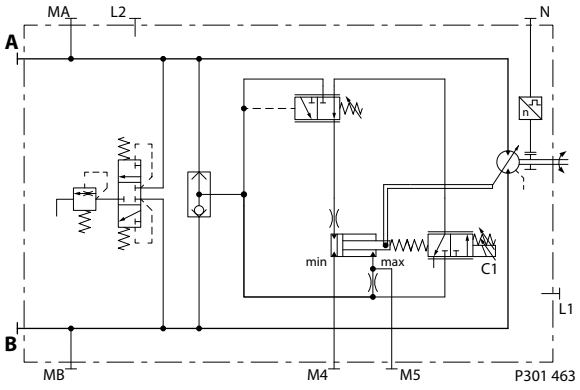

Options K1KA, K2KA



Solenoid C1
De-energized = min. displacement
Full-energized = max. displacement

A, B	Main pressure lines
L1, L2	Drain lines
M4, M5	Gauge port servo pressure
MA, MB	Gauge port system pressure
N	Speed sensor (optional)

Displacement (%) versus Input Command (mA)

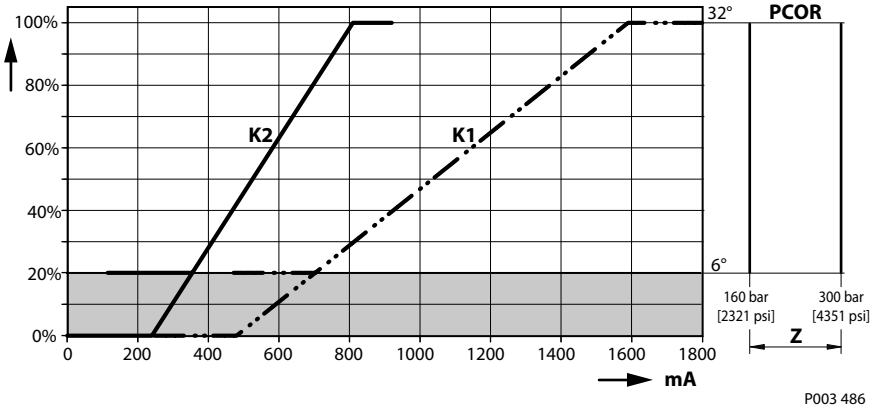

K1, K2 = K1, K2 Control
Z = Start setting range
Grey area = Intended to be used for zero degree capability.

Electric proportional and two-position controls

Formulas how to calculate start and end input command (mA) dependent on displacements

Input command (mA)	% displ.	Control *1	Control *2
Start input command	from 0 %	480 ± 10	240 ± 5
	from x % min.	(V_{gx}/V_{gmax}) x 1110 + 480	(V_{gx}/V_{gmax}) x 570 + 240
End input command	at 100 %	1590 ± 130	810 ± 67
	at y % max.	(V_{gy}/V_{gmax}) x 1110 + 480	(V_{gy}/V_{gmax}) x 570 + 240
Maximum allowed current		1800	920

Where:

V_{gmax} Maximum, theoretic possible motor displacement per revolution (cm^3/rev)

V_{gx} Minimum displacement setting of desired unit (cm^3/rev)

V_{gy} Maximum displacement setting of desired unit (cm^3/rev)

x Minimum displacement (%)

y Maximum displacement (%)

Proportional solenoid data C1

Description		12 V	24 V
Maximum current		1800 mA	920 mA
Nominal coil resistance	@ 20 °C [68 °F]	3.7 Ω	14.20 Ω
	@ 80 °C [176 °F]	4.57 Ω	17.52 Ω
Inductance		29 mH	108 mH
PWM signal frequency	Range	70 – 200 Hz	
	Recommended*	150 Hz	
IP Rating	IEC 60 529	IP 67	
	DIN 40 050, part 9	IP 69K with mating connector	
Connector color		Black	

* PWM signal required for optimum control performance.

Warning

Zero degree capability results in a high risk of overspeed and drops in efficiency if the motor operates between 0–20% displacement.

Electric proportional and two-position controls

K1K1 and K2K2 options with PCOR and electric BPD

K1 – electric proportional 12 V / **de-energized = min. displacement** / with PCOR
K1 – with PCOR / with electric BPD 12 V / de-energized BPD = PCOR active at port A

K2 – electric proportional 24 V / **de-energized = min. displacement** / with PCOR
K2 – with PCOR / with electric BPD 24 V / de-energized BPD = PCOR active at port A

Hydraulic schematic

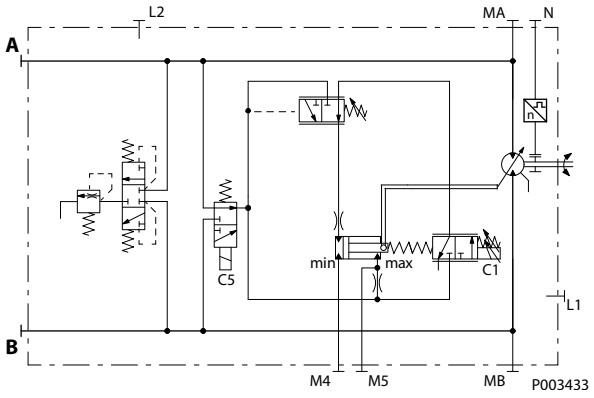

Options K1K1, K2K2



Solenoid C1
De-energized = min. displacement
Full-energized = max. displacement

A, B	Main pressure lines
L1, L2	Drain lines
M4, M5	Gauge port servo pressure
MA, MB	Gauge port system pressure
N	Speed sensor (optional)

Displacement (%) versus Input Command (mA)

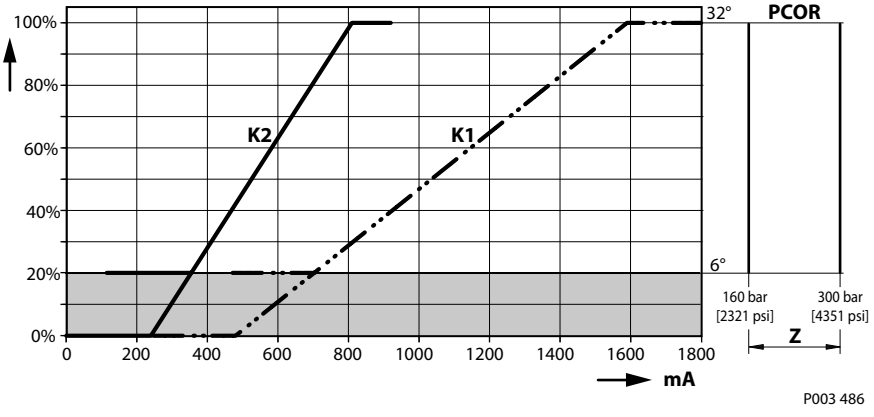

K1, K2 = K1, K2 Control
Z = Start setting range
Grey area = Intended to be used for zero degree capability.

For the formulas to calculate start and end input command dependent on displacements please see *K1KA and K2KA options with PCOR* on page 56.

Electric proportional and two-position controls

Proportional control solenoid data C1

Description		12 V	24 V
Maximum current		1800 mA	920 mA
Nominal coil resistance	@ 20 °C [68 °F]	3.7 Ω	14.20 Ω
	@ 80 °C [176 °F]	4.57 Ω	17.52 Ω
Inductance		29 mH	108 mH
PWM signal frequency	Range	70 – 200 Hz	
	Recommended*	150 Hz	
IP Rating	IEC 60 529	IP 67	
	DIN 40 050, part 9	IP 69K with mating connector	
Connector color		Black	

* PWM signal required for optimum control performance.

Two-position solenoid data C5 (Brake pressure defeat)

Description		12 V	24 V
Supply voltage	Minimum	9.5 V_{DC}	19 V_{DC}
	Max. (continuous)	14.6 V_{DC}	29 V_{DC}
Nominal coil resistance @ 20 °C [68 °F]		8.7 Ω	34.5 Ω
Input current	Recommended	1050 mA	500 mA
IP Rating	IEC 60 529	IP 67	
	DIN 40 050, part 9	IP 69K with mating connector	
Bi-directional diode		yes	
Connector color		Blue	

Warning

Zero degree capability results in a high risk of overspeed and drops in efficiency if the motor operates between 0–20% displacement.

Electric proportional and two-position controls

E1AA and E2AA options

E1 – electric two-position 12 V / **de-energized = max. displacement**
E2 – electric two-position 24 V / **de-energized = max. displacement**
AA– without Pressure Compensator Over Ride / without Brake Pressure Defeat

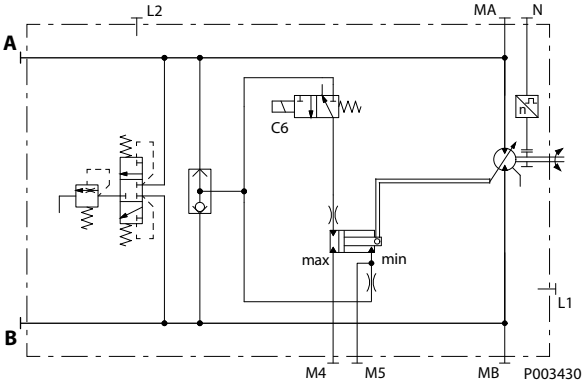

Options E1AA, E2AA



Solenoid C6
De-energized = max. displacement
Energized = min. displacement

A, B	Main pressure lines
L1, L2	Drain lines
M4, M5	Gauge port servo pressure
MA, MB	Gauge port system pressure
N	Speed sensor (optional)

Displacement versus control signal

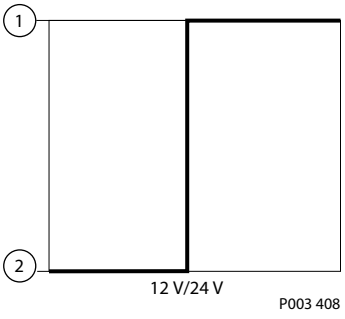

Where:

1 Minimum displacement
2 Maximum displacement

Two-position control solenoid C6 technical data

Description		**12 V**	**24 V**
Supply voltage	Minimum	9.5 V_{DC}	19 V_{DC}
	Max. (continuous)	14.6 V_{DC}	29 V_{DC}
Nominal coil resistance @ 20 °C [68 °F]		8.7 Ω	34.5 Ω
Input current	Recommended	1050 mA	500 mA
IP Rating	IEC 60 529	IP 67	
	DIN 40 050, part 9	IP 69K with mating connector	
Bi-directional diode		yes	
Connector color		Blue	

Electric proportional and two-position controls

F1EA and F2EA options

F1 – electric two-position 12 V / **de-energized = min. displacement**
F2 – electric two-position 24 V / **de-energized = min. displacement**
EA– without Pressure Compensator Over Ride / without Brake Pressure Defeat

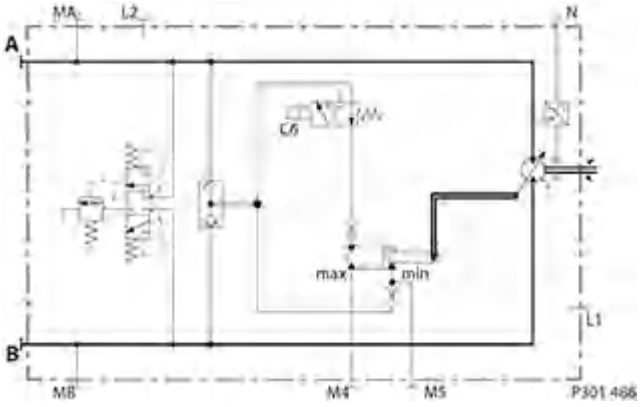

Options F1EA, F2EA



Solenoid C6
De-energized = min. displacement
Energized = max. displacement

A, B	Main pressure lines
L1, L2	Drain lines
M4, M5	Gauge port servo pressure
MA, MB	Gauge port system pressure
N	Speed sensor (optional)

Displacement versus control signal

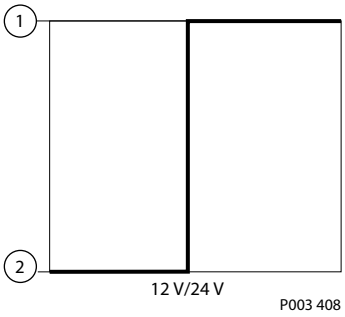

Where:

1	Maximum displacement
2	Minimum displacement

Two-position control solenoid C6 technical data

Description		**12 V**	**24 V**
Supply voltage	Minimum	9.5 V_{DC}	19 V_{DC}
	Max. (continuous)	14.6 V_{DC}	29 V_{DC}
Nominal coil resistance @ 20 °C [68 °F]		8.7 Ω	34.5 Ω
Input current	Recommended	1050 mA	500 mA
IP Rating	IEC 60 529	IP 67	
	DIN 40 050, part 9	IP 69K with mating connector	
Bi-directional diode		yes	
Connector color		Blue	

Electric proportional and two-position controls

T1DA and T2DA options with PCOR

T1 – electric two-position 12 V / **de-energized = minimum displacement**
T2 – electric two-position 24 V / **de-energized = minimum displacement**
DA – with PCOR / without Brake Pressure Defeat

Warning

This control is not for use in propel applications.

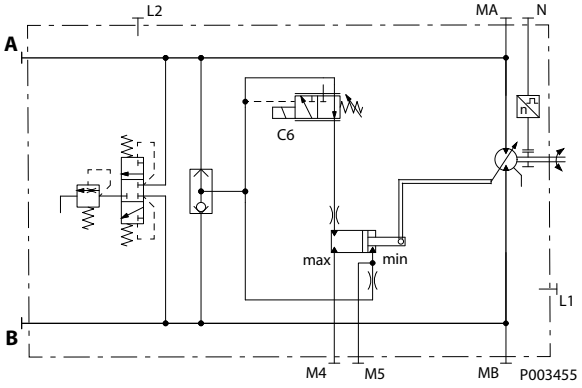

Options T1DA, T2DA



Solenoid C6
De-energized = min. displacement
Full-energized = max. displacement

A, B	Main pressure lines
L1, L2	Drain lines
M4, M5	Gauge port servo pressure
MA, MB	Gauge port system pressure
N	Speed sensor (optional)

Displacement versus PCOR pressure

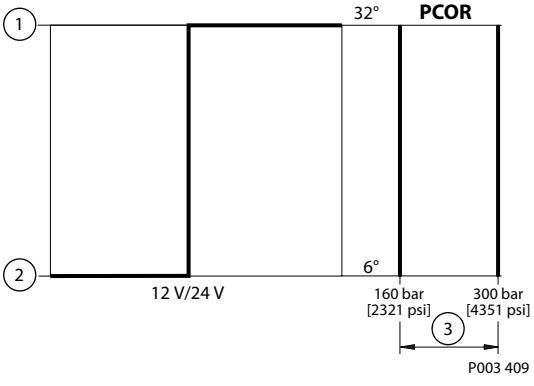

Where:

1 Maximum displacement
2 Minimum displacement
3 Start setting range

Two-position solenoid data C6

Description		12 V	24 V
Supply voltage	Minimum	9.5 V_{DC}	19 V_{DC}
	Max. (continuous)	14.6 V_{DC}	29 V_{DC}
Nominal coil resistance @ 20 °C [68 °F]		8.7 Ω	34.5 Ω
Input current	Recommended	1050 mA	500 mA
IP Rating	IEC 60 529	IP 67	
	DIN 40 050, part 9	IP 69K with mating connector	

Electric proportional and two-position controls

Description	12 V	24 V
Bi-directional diode	yes	
Connector color	Blue	

Electric proportional and two-position controls

T1D1 and T2D2 options with PCOR and electric BPD

T1 – electric two-position 12 V / **de-energized = min. displacement**
D1 – with PCOR / with electric 12 V BPD, de-energized BPD = PCOR active at port A

T2 – electric two-position 24 V / **de-energized = min. displacement**
D2 – with PCOR / with electric 24 V BPD, de-energized BPD = PCOR active at port A

Hydraulic schematic

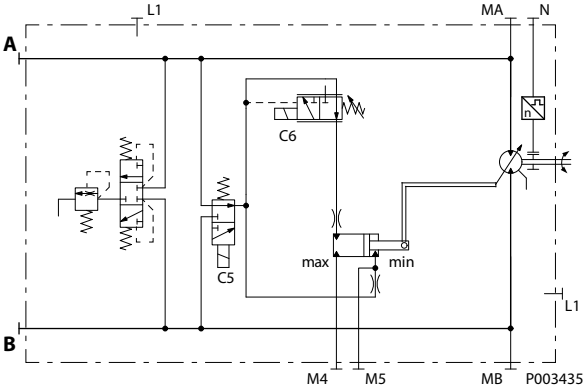

Options T1D1, T2D2



Solenoid C6
De-energized = min. displacement
Full-energized = max. displacement

A, B	Main pressure lines
L1, L2	Drain lines
M4, M5	Gauge port servo pressure
MA, MB	Gauge port system pressure
N	Speed sensor (optional)

Displacement versus PCOR pressure

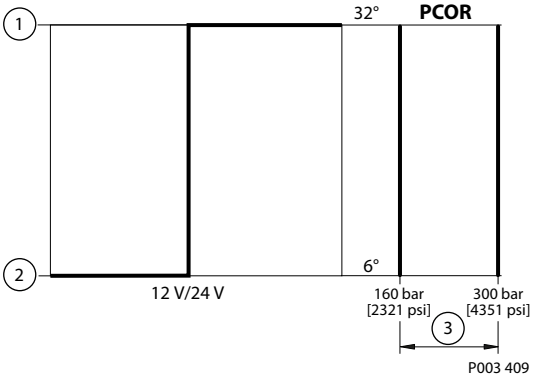

Where:
1 Maximum displacement
2 Minimum displacement
3 Start setting range

Two-position solenoids C5 (Brake pressure defeat) and C6 technical data

Description		12 V	24 V
Supply voltage	Minimum	9.5 V_{DC}	19 V_{DC}
	Max. (continuous)	14.6 V_{DC}	29 V_{DC}
Nominal coil resistance @ 20 °C [68 °F]		8.7 Ω	34.5 Ω
Input current	Recommended	1050 mA	500 mA
IP Rating	IEC 60 529	IP 67	
	DIN 40 050, part 9	IP 69K with mating connector	

Electric proportional and two-position controls

Description	12 V	24 V
Bi-directional diode	yes	
Connector color	Blue	

Electric proportional and two-position controls

T1G1 and T2G2 options with PCOR and electric BPD

T1 – electric two-position 12 V / **de-energized = min. displacement**
G1 – with PCOR / with electric 12 V BPD, **de-energized BPD = PCOR active at port B**
T2 – electric two-position 24 V / **de-energized = min. displacement**
G2 – with PCOR / with electric 24 V BPD, **de-energized BPD = PCOR active at port B**

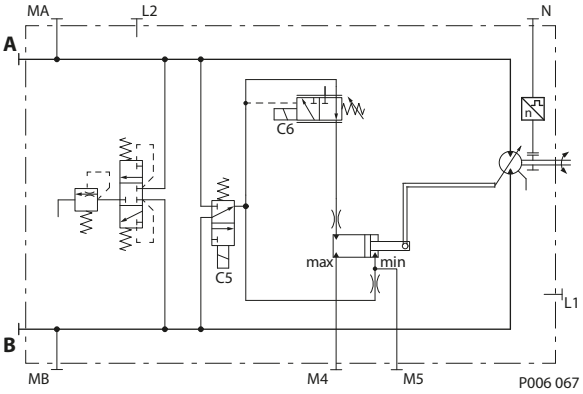

Options T1G1, T2G2



Solenoid C6
De-energized = min. displacement
Full-energized = max. displacement

A, B	Main pressure lines
L1, L2	Drain lines
M4, M5	Gauge port servo pressure
MA, MB	Gauge port system pressure
N	Speed sensor (optional)

Displacement versus PCOR pressure

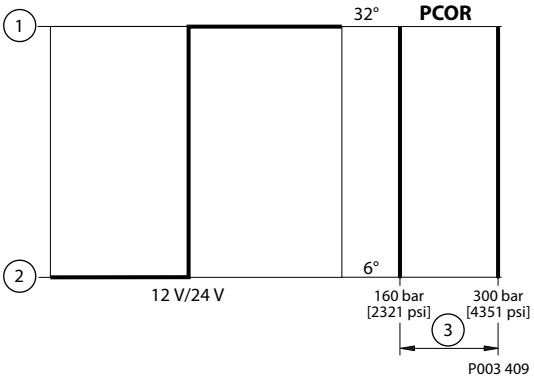

Where:
1 Maximum displacement
2 Minimum displacement
3 Start setting range

Two-position solenoids C5 (Brake pressure defeat) and C6 technical data

Description		12 V	24 V
Supply voltage	Minimum	9.5 V_{DC}	19 V_{DC}
	Max. (continuous)	14.6 V_{DC}	29 V_{DC}
Nominal coil resistance @ 20 °C [68 °F]		8.7 Ω	34.5 Ω
Input current	Recommended	1050 mA	500 mA
IP Rating	IEC 60 529	IP 67	
	DIN 40 050, part 9	IP 69K with mating connector	

Electric proportional and two-position controls

Description	12 V	24 V
Bi-directional diode	yes	
Connector color	Blue	

Electric proportional and two-position controls

P1DA and P2DA options with PCOR

P1 – electric two-position control 12 V, **de-energized = minimum displacement** with electric proportional PCOR 12 V

P2 – electric two-position control 24 V, **de-energized = minimum displacement** with electric proportional PCOR 24 V

DA – with electric proportional PCOR, without Brake Pressure Defeat

Warning

This control is not for use in propel applications.

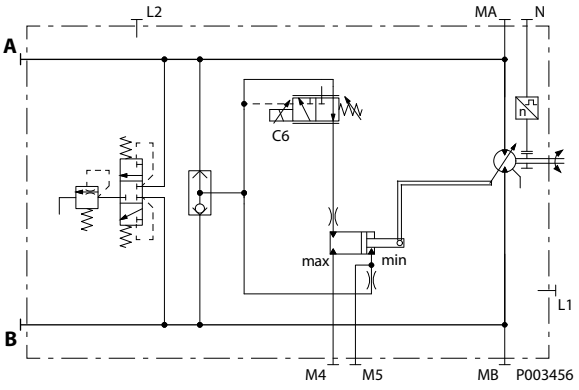

Options P1DA, P2DA



Solenoid C6
De-energized = min. displacement
Full-energized = max. displacement

A, B	Main pressure lines
L1, L2	Drain lines
M4, M5	Gauge port servo pressure
MA, MB	Gauge port system pressure
N	Speed sensor (optional)

PCOR pressure (bar) versus Input command (mA)

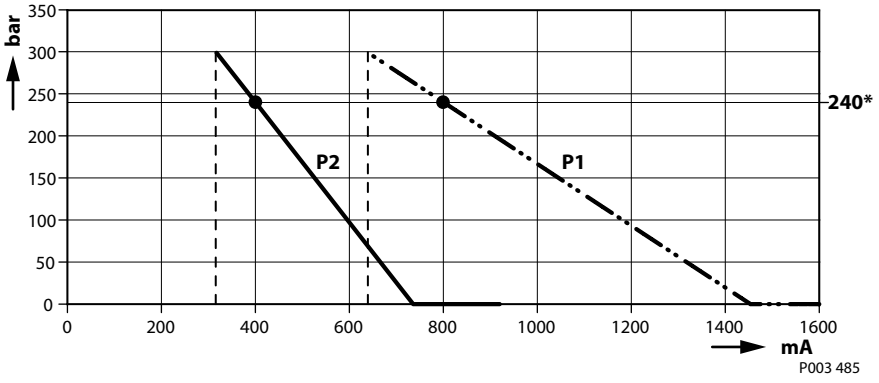

Maximum PCOR setting = 300 bar [4351 psi], * Production test setting = 240 bar

Caution

If the signal to the PPCOR is lost or drops below the range shown in the chart, the PCOR setting will potentially increase to pressure levels above the recommended application limits or the regulated pressure control of the pump, and in effect, disable the PCOR function.

The PCOR pressure level can be proportionally changed with the input current to the solenoid.

Electric proportional and two-position controls

Formulas to calculate pressure level dependent on input current

Voltage	All sizes (mA)	Variables:
12 V	$I_{PCOR} = -2.724 \times P_{PCOR} + 1453.8$	P_{PCOR} = PCOR pressure level (bar) I_{PCOR} = Current input to proportional PCOR solenoid (mA)
24 V	$I_{PCOR} = -1.399 \times P_{PCOR} + 735.7$	

Proportional control solenoid data C6

Description		12 V	24 V
Maximum current		1800 mA	920 mA
Nominal coil resistance	@ 20 °C [68 °F]	3.7 Ω	14.20 Ω
	@ 80 °C [176 °F]	4.57 Ω	17.52 Ω
Inductance		29 mH	108 mH
PWM signal frequency	Range	70 – 200 Hz	
	Recommended*	150 Hz	
IP Rating	IEC 60 529	IP 67	
	DIN 40 050, part 9	IP 69K with mating connector	
Connector color		Blue	

* PWM signal required for optimum control performance.

Electric proportional and two-position controls

P1D1 and P2D2 options with PCOR and electric BPD

P1 – electric two-position 12 V, **de-energized = min. displacement** with electric prop. PCOR 12 V
D1 – with electric prop. PCOR, with electric BPD 12 V, **de-energized BPD = PCOR active at port A**

P2 – electric two-position 24 V, **de-energized = min. displacement** with electric prop. PCOR 24V
D2 – with electric prop. PCOR, with electric BPD 24 V, **de-energized BPD = PCOR active at port A**

Hydraulic schematic

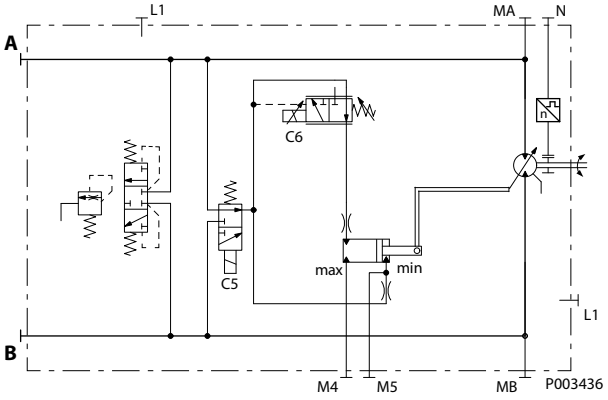

Options P1D1, P2D2



Solenoid C6
De-energized = min. displacement
Full-energized = max. displacement

A, B	Main pressure lines
L1, L2	Drain lines
M4, M5	Gauge port servo pressure
MA, MB	Gauge port system pressure
N	Speed sensor (optional)

PCOR pressure (bar) versus Input command (mA)

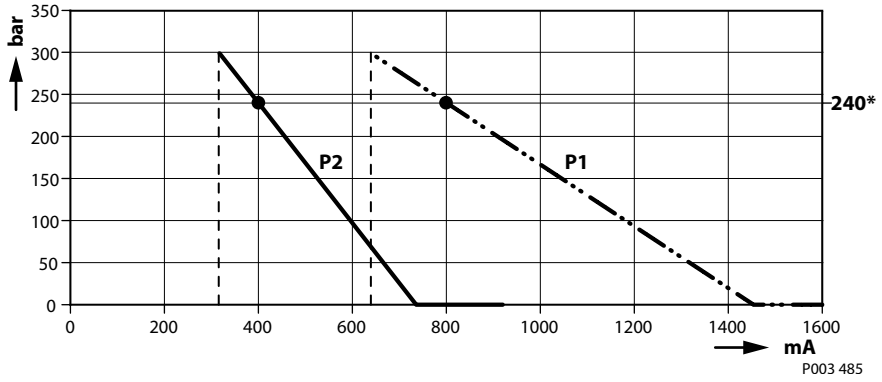

Maximum PCOR setting = 300 bar [4351 psi], * Production test setting = 240 bar

Caution

If the signal to the PPCOR is lost or drops below the range shown in the chart, the PCOR setting will potentially increase to pressure levels above the recommended application limits or the regulated pressure control of the pump, and in effect, disable the PCOR function.

The PCOR pressure level can be proportionally changed with the input current to the solenoid.

For formulas to calculate pressure level dependent on input current please see *P1DA and P2DA options with PCOR* on page 68.

Electric proportional and two-position controls

Two-position solenoid data C5 (Brake pressure defeat)

Description		12 V	24 V
Supply voltage	Minimum	9.5 V_{DC}	19 V_{DC}
	Max. (continuous)	14.6 V_{DC}	29 V_{DC}
Nominal coil resistance @ 20 °C [68 °F]		8.7 Ω	34.5 Ω
Input current	Recommended	1050 mA	500 mA
IP Rating	IEC 60 529	IP 67	
	DIN 40 050, part 9	IP 69K with mating connector	
Bi-directional diode		yes	
Connector color		Blue	

Proportional control solenoid data C6

Description		12 V	24 V
Maximum current		1800 mA	920 mA
Nominal coil resistance	@ 20 °C [68 °F]	3.7 Ω	14.20 Ω
	@ 80 °C [176 °F]	4.57 Ω	17.52 Ω
Inductance		29 mH	108 mH
PWM signal frequency	Range	70 – 200 Hz	
	Recommended*	150 Hz	
IP Rating	IEC 60 529	IP 67	
	DIN 40 050, part 9	IP 69K with mating connector	
Connector color		Black	

* PWM signal required for optimum control performance.

Electric proportional and two-position controls

P1G1 and P2G2 options with PCOR and electric BPD

P1 – electric prop. 12V / **de-energized = min. displacement** with electric prop. PCOR 12V
G1 – with electric propor. PCOR / with electric BPD 12V, **de-energized BPD = PCOR active at port B**

P2 – electric prop. 24V / **de-energized = min. displacement** with electric prop. PCOR 24V
G2 – with electric propor. PCOR / with electric BPD 24V, **de-energized BPD = PCOR active at port B**

Hydraulic schematic

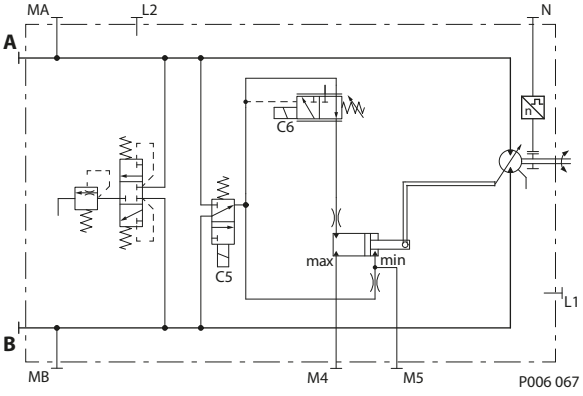

Options P1G1, P2G2



Solenoid C6
De-energized = min. displacement
Full-energized = max. displacement

A, B	Main pressure lines
L1, L2	Drain lines
M4, M5	Gauge port servo pressure
MA, MB	Gauge port system pressure
N	Speed sensor (optional)

PCOR pressure (bar) versus Input command (mA)

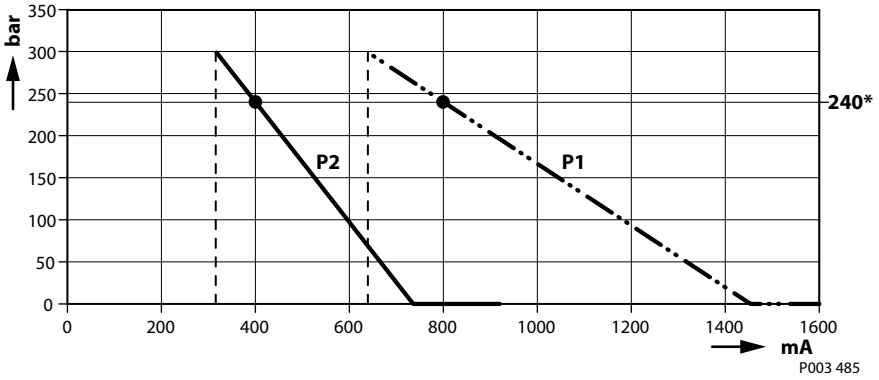

Maximum PCOR setting = 300 bar [4351 psi], * Production test setting = 240 bar

Caution

If the signal to the PPCOR is lost or drops below the range shown in the chart, the PCOR setting will potentially increase to pressure levels above the recommended application limits or the regulated pressure control of the pump, and in effect, disable the PCOR function.

The PCOR pressure level can be proportionally changed with the input current to the solenoid.

For formulas to calculate pressure level dependent on input current please see *P1DA and P2DA options with PCOR* on page 68.

Electric proportional and two-position controls

Two-position solenoid data C5 (Brake pressure defeat)

Description		12 V	24 V
Supply voltage	Minimum	9.5 V_{DC}	19 V_{DC}
	Max. (continuous)	14.6 V_{DC}	29 V_{DC}
Nominal coil resistance @ 20 °C [68 °F]		8.7 Ω	34.5 Ω
Input current	Recommended	1050 mA	500 mA
IP Rating	IEC 60 529	IP 67	
	DIN 40 050, part 9	IP 69K with mating connector	
Bi-directional diode		yes	
Connector color		Blue	

Proportional control solenoid data C6

Description		12 V	24 V
Maximum current		1800 mA	920 mA
Nominal coil resistance	@ 20 °C [68 °F]	3.7 Ω	14.20 Ω
	@ 80 °C [176 °F]	4.57 Ω	17.52 Ω
Inductance		29 mH	108 mH
PWM signal frequency	Range	70 – 200 Hz	
	Recommended*	150 Hz	
IP Rating	IEC 60 529	IP 67	
	DIN 40 050, part 9	IP 69K with mating connector	
Connector color		Black	

* PWM signal required for optimum control performance.

Hydraulic proportional and two-position controls

LHBA option

LH – hydraulic proportional **non-pressurized = max. displacement**
BA – without Pressure Compensator Over Ride / without Brake Pressure Defeat

Hydraulic schematic

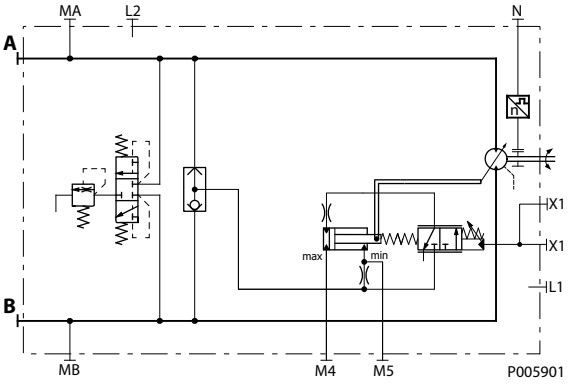

Option LHBA



Hydraulic actuator X1
Non-pressurized = max. displacement.
Full-pressurized = min. displacement.

A, B	Main pressure lines
L1, L2	Drain lines
M4, M5	Gauge port servo pressure
MA, MB	Gauge port system pressure
X1	Control pressure port
N	Speed sensor (optional)

Displacement (%) versus Input command (bar)

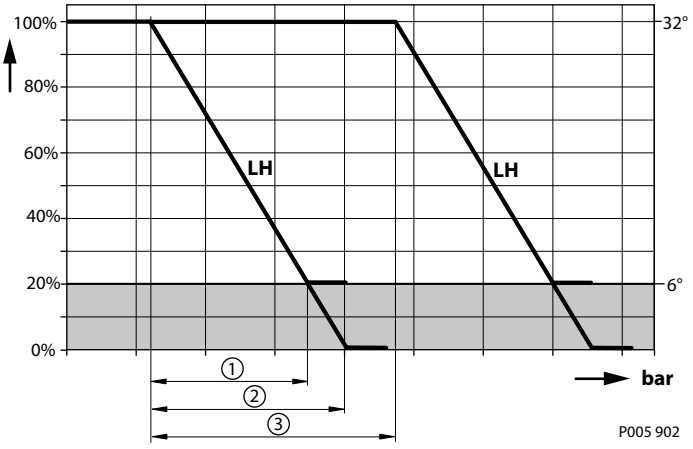

1 = Control ramp, 100% - 20% (14 bar [203 psi])
2 = Control ramp, 100% - 0% (17.5 bar [254 psi])
3 = Control start setting range
*Grey area*If the signal to = Intended to be used for zero degree capability.

Control start setting range (pressure above case pressure)	
p_{start} (possible settings per MMC.- adjustable)	2 to 30 bar [29 to 435 psi]
$P_{max\ allowable}$	Control start setting + 50 bar [725 psi]

Hydraulic proportional and two-position controls

Control ramp	
From 100% to 20% displacement	14 bar [203 psi]
From 100% to 0% displacement	17.5 bar [254 psi]

Below are formulas to calculate start and end input command dependent on displacement:

Formulas to calculate start and end input command

Control type	Input command (bar)	% displacement	All sizes (bar)
LH	Start input command	from 100%	$p_{start} \pm 0.5$
		from y% max.	$(1 - V_{gy}/V_{gmax}) \times 17.5 + p_{start} \pm 0.5$
	End input command	at 0 %	$p_{start} + 17.5 \pm 2.5$
		at x % min.	$(1 - V_{gx}/V_{gmax}) \times 17.5 + p_{start} \pm 2.5$

Where:

V_{gmax} Maximum, theoretic possible motor displacement per revolution (cm^3/rev)

V_{gx} Minimum displacement setting of desired unit (cm^3/rev)

V_{gy} Maximum displacement setting of desired unit (cm^3/rev)

x Minimum displacement (%)

y Maximum displacement (%)

Warning

Zero degree capability results in a high risk of overspeed and drops in efficiency if the motor operates between 0–20% displacement.

Hydraulic proportional and two-position controls

MHCA option

MH – hydraulic proportional **non-pressurized = min. displacement**
CA – without Pressure Compensator Over Ride / without Brake Pressure Defeat

Hydraulic schematic

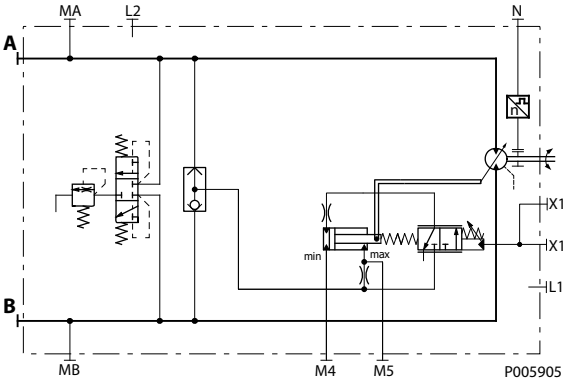

Option MHCA



Hydraulic actuator X1
Non-pressurized = min. displacement.
Full-pressurized = max. displacement.

A, B	Main pressure lines
L1, L2	Drain lines
M4, M5	Gauge port servo pressure
MA, MB	Gauge port system pressure
X1	Control pressure port
N	Speed sensor (optional)

Displacement (%) versus Input Command (bar)

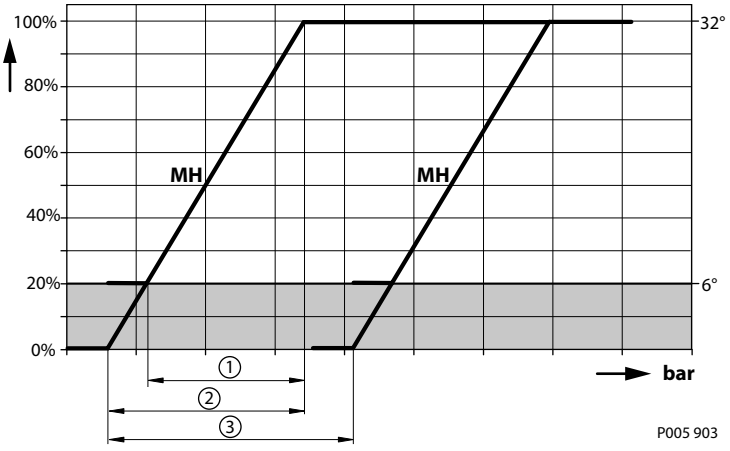

1 = Control ramp, 100% - 20% (14 bar [203 psi])
2 = Control ramp, 100% - 0% (17.5 bar [254 psi])
3 = Control start setting range
*Grey area*If the signal to = Intended to be used for zero degree capability.

Control start setting range (pressure above case pressure)	
p_{start} (possible settings per MMC.- adjustable)	2 to 30 bar [29 to 435 psi]
$P_{max\ allowable}$	Control start setting + 50 bar [725 psi]

Hydraulic proportional and two-position controls

Control ramp	
From 100% to 20% displacement	14 bar [203 psi]
From 100% to 0% displacement	17.5 bar [254 psi]

Formulas to calculate start and end input command

Control type	Input command (bar)	% displacement	All sizes (bar)
MH	Start input command	from 0%	$p_{start} \pm 0.5$
		from x% max.	$(V_{gx}/V_{gmax}) \times 17.5 + p_{start} \pm 0.5$
	End input command	at 100%	$p_{start} + 17.5 \pm 2.5$
		at y% min.	$(V_{gy}/V_{gmax}) \times 17.5 + p_{start} \pm 2.5$

Where:

V_{gmax} Maximum, theoretic possible motor displacement per revolution (cm^3/rev)

V_{gx} Minimum displacement setting of desired unit (cm^3/rev)

V_{gy} Maximum displacement setting of desired unit (cm^3/rev)

x Minimum displacement (%)

y Maximum displacement (%)

Warning

Zero degree capability results in a high risk of overspeed and drops in efficiency if the motor operates between 0–20% displacement.

Hydraulic proportional and two-position controls

DHMA option with PCOR

DH – hydraulic proportional / **non-pressurized = max. displacement**
MA – with Pressure Compensator Over Ride / without Brake Pressure Defeat

Hydraulic schematic

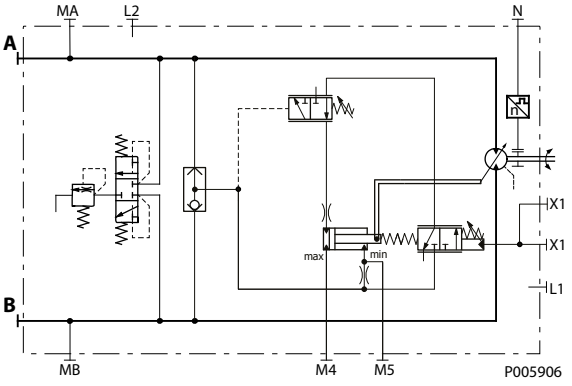

Option DHMA



Hydraulic actuator X1
Non-pressurized = max. displacement.
Full-pressurized = min. displacement.

Where:

A, B	Main pressure lines
L1, L2	Drain lines
M4, M5	Gauge port servo pressure
MA, MB	Gauge port system pressure
X1	Control pressure port
N	Speed sensor (optional)

Displacement (%) versus Input Command (bar)

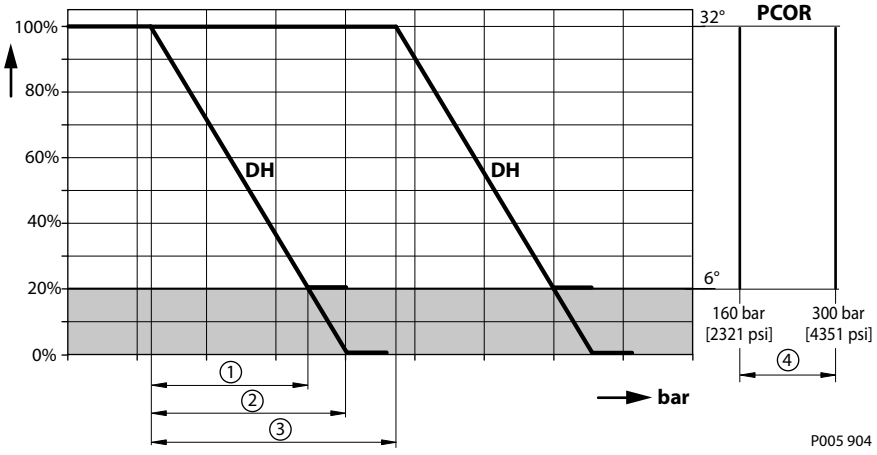

1 = Control ramp, 100% - 20% (14 bar [203 psi])
2 = Control ramp, 100% - 0% (17.5 bar [254 psi])
3 = Control start setting range
4 = PCOR start setting range
Grey area = Intended to be used for zero degree capability.

Hydraulic proportional and two-position controls

Control start setting range (pressure above case pressure)	
p_{start} (possible settings per MMC.- adjustable)	2 to 30 bar [29 to 435 psi]
$P_{max\ allowable}$	Control start setting + 50 bar [725 psi]

Control ramp	
From 100% to 20% displacement	14 bar [203 psi]
From 100% to 0% displacement	17.5 bar [254 psi]

Formulas to calculate start and end input command

Control type	Input command (bar)	% displacement	All sizes (bar)
DH	Start input command	from 100%	$p_{start} \pm 0.5$
		from y% max.	$(1 - V_{gy}/V_{gmax}) \times 17.5 + p_{start} \pm 0.5$
	End input command	at 0 %	$p_{start} + 17.5 \pm 2.5$
		at x % min.	$(1 - V_{gx}/V_{gmax}) \times 17.5 + p_{start} \pm 2.5$

Where:

V_{gmax} Maximum, theoretic possible motor displacement per revolution (cm^3/rev)

V_{gx} Minimum displacement setting of desired unit (cm^3/rev)

V_{gy} Maximum displacement setting of desired unit (cm^3/rev)

x Minimum displacement (%)

y Maximum displacement (%)

Warning

Zero degree capability results in a high risk of overspeed and drops in efficiency if the motor operates between 0–20% displacement.

Hydraulic proportional and two-position controls

DHMH option with PCOR and BPD

DH – hydraulic proportional / **non-pressurized = max. displacement**
MH – with Pressure Compensator Over Ride / with Brake Pressure Defeat (non-pressurized BPD = PCOR active port not defined without pilot pressure difference on XA or XB)

Hydraulic schematic

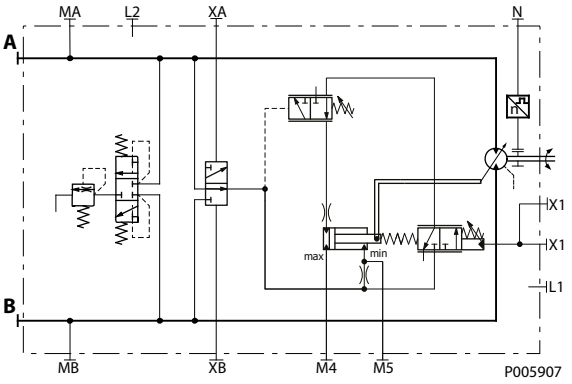

Option DHMH



Hydraulic actuator X1
Non-pressurized = max. displacement.
Full-pressurized = min. displacement.

A, B	Main pressure lines
L1, L2	Drain lines
M4, M5	Gauge port servo pressure
MA, MB	Gauge port system pressure
XA, XB	Control pressure ports brake pressure defeat
X1	Control pressure port
N	Speed sensor (optional)

Displacement (%) versus Input Command (bar)

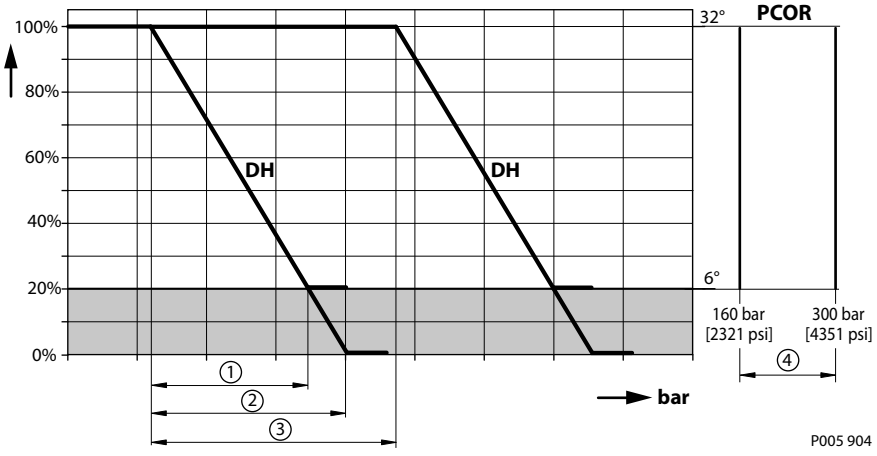

1 = Control ramp, 100% - 20% (14 bar [203 psi])
2 = Control ramp, 100% - 0% (17.5 bar [254 psi])
3 = Control start setting range
4 = PCOR start setting range
Grey area = Intended to be used for zero degree capability.

Hydraulic proportional and two-position controls

Control start setting range (pressure above case pressure)	
p_{start} (possible settings per MMC.- adjustable)	2 to 30 bar [29 to 435 psi]
$P_{max\ allowable}$	Control start setting + 50 bar [725 psi]

Control ramp	
From 100% to 20% displacement	14 bar [203 psi]
From 100% to 0% displacement	17.5 bar [254 psi]

Formulas to calculate start and end input command

Control type	Input command (bar)	% displacement	All sizes (bar)
DH	Start input command	from 100%	$p_{start} \pm 0.5$
		from y% max.	$(1 - V_{gy}/V_{gmax}) \times 17.5 + p_{start} \pm 0.5$
	End input command	at 0%	$p_{start} + 17.5 \pm 2.5$
		at x% min.	$(1 - V_{gx}/V_{gmax}) \times 17.5 + p_{start} \pm 2.5$

Where:

V_{gmax} Maximum, theoretic possible motor displacement per revolution (cm^3/rev)

V_{gx} Minimum displacement setting of desired unit (cm^3/rev)

V_{gy} Maximum displacement setting of desired unit (cm^3/rev)

x Minimum displacement (%)

y Maximum displacement (%)

Pressure Compensator OverRide (PCOR) with Brake Pressure Defeat (BPD) configuration

A brake pressure defeat (BPD) shuttle valve ahead of the pressure compensator prevents operation in the deceleration direction (when motor is running in pump mode). This is designed to prevent rapid or uncontrolled deceleration while the vehicle/machine is slowing down.

Pressure compensator override with brake pressure defeat is mainly used in systems with pumps having electric or hydraulic proportional controls or automotive controls.

The brake pressure defeat must be controlled by a 2-line external signal based on direction of motor rotation, see the following table:

Pressure Compensator OverRide (PCOR) operation

Motor rotation	High pressure port	Control pressure on port[1)]	PCOR function
CW	A	XA	no
CW	A	XB	yes
CCW	B	XA	yes
CCW	B	XB	no

[1)] Differential control pressure between ports XA and XB: p_{min} = 2.5 bar [36 psi] and p_{max} = 50 bar [725 psi]

Warning

Zero degree capability results in a high risk of overspeed and drops in efficiency if the motor operates between 0–20% displacement.

Hydraulic proportional and two-position controls

KHKA option with PCOR

KH – hydraulic proportional / **non-pressurized = min. displacement**
KA – with Pressure Compensator Over Ride / without Brake Pressure Defeat

Hydraulic schematic

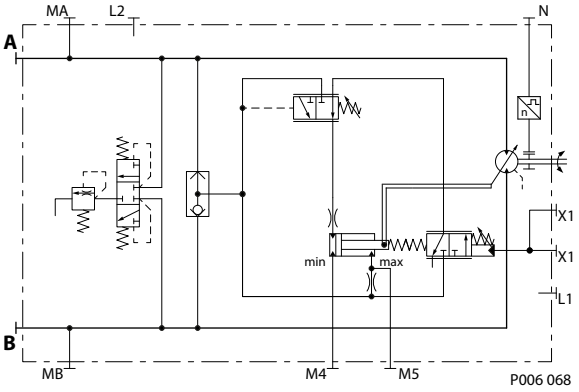

Option KHKA



Hydraulic actuator X1
Non-pressurized = min. displacement.
Full-pressurized = max. displacement.

Where:

A, B	Main pressure lines
L1, L2	Drain lines
M4, M5	Gauge port servo pressure
MA, MB	Gauge port system pressure
XA, XB	Control pressure ports brake pressure defeat
X1	Control pressure port
N	Speed sensor (optional)

Displacement (%) versus Input Command (bar)

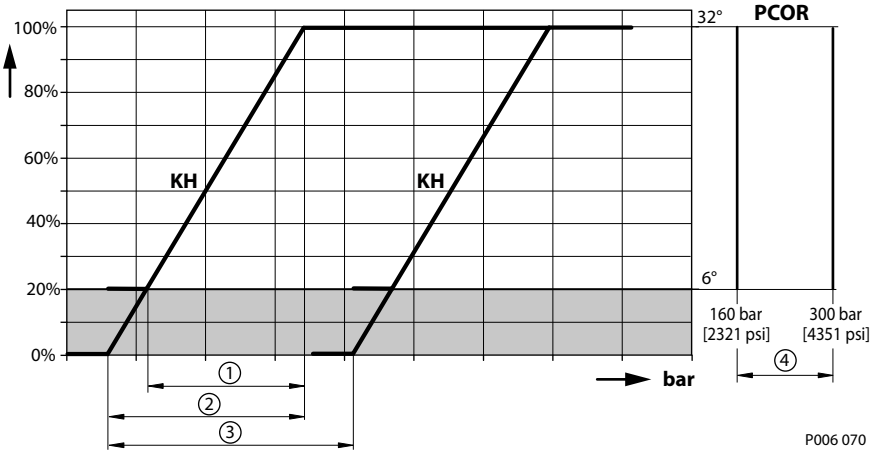

1 = Control ramp, 100% - 20% (14 bar [203 psi])
2 = Control ramp, 100% - 0% (17.5 bar [254 psi])
3 = Control start setting range
4 = PCOR start setting range
Grey area = Intended to be used for zero degree capability.

Hydraulic proportional and two-position controls

Control start setting range (pressure above case pressure)	
p_{start} (possible settings per MMC.- adjustable)	2 to 30 bar [29 to 435 psi]
$P_{max\ allowable}$	Control start setting + 50 bar [725 psi]

Control ramp	
From 100% to 20% displacement	14 bar [203 psi]
From 100% to 0% displacement	17.5 bar [254 psi]

Formulas to calculate start and end input command

Control type	Input command (bar)	% displacement	All sizes (bar)
KH	Start input command	from 100%	$p_{start} \pm 0.5$
		from y% max.	$(1 - V_{gy}/V_{gmax}) \times 17.5 + p_{start} \pm 0.5$
	End input command	at 0%	$p_{start} + 17.5 \pm 2.5$
		at x% min.	$(1 - V_{gx}/V_{gmax}) \times 17.5 + p_{start} \pm 2.5$

Where:

V_{gmax} Maximum, theoretic possible motor displacement per revolution (cm^3/rev)

V_{gx} Minimum displacement setting of desired unit (cm^3/rev)

V_{gy} Maximum displacement setting of desired unit (cm^3/rev)

x Minimum displacement (%)

y Maximum displacement (%)

Warning

Zero degree capability results in a high risk of overspeed and drops in efficiency if the motor operates between 0–20% displacement.

Hydraulic proportional and two-position controls

KHKH option with PCOR and BPD

KH – hydraulic proportional / **non-pressurized = min. displacement**
KH – with Pressure Compensator Over Ride / with Brake Pressure Defeat (non-pressurized BPD = PCOR active port not defined without pilot pressure difference on XA or XB)

Hydraulic schematic

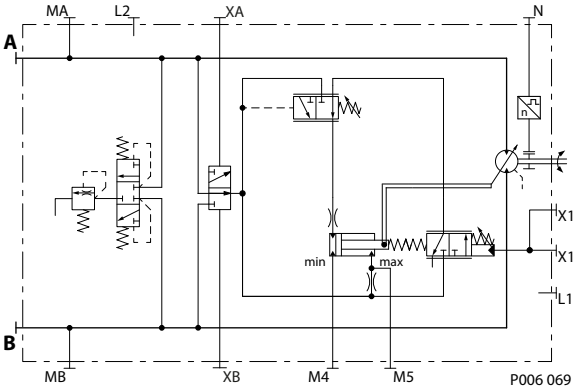

Option KHKH



Hydraulic actuator X1
Non-pressurized = min. displacement.
Full-pressurized = max. displacement.

Where:

A, B	Main pressure lines
L1, L2	Drain lines
M4, M5	Gauge port servo pressure
MA, MB	Gauge port system pressure
XA, XB	Control pressure ports brake pressure defeat
X1	Control pressure port
N	Speed sensor (optional)

Displacement (%) versus Input Command (bar)

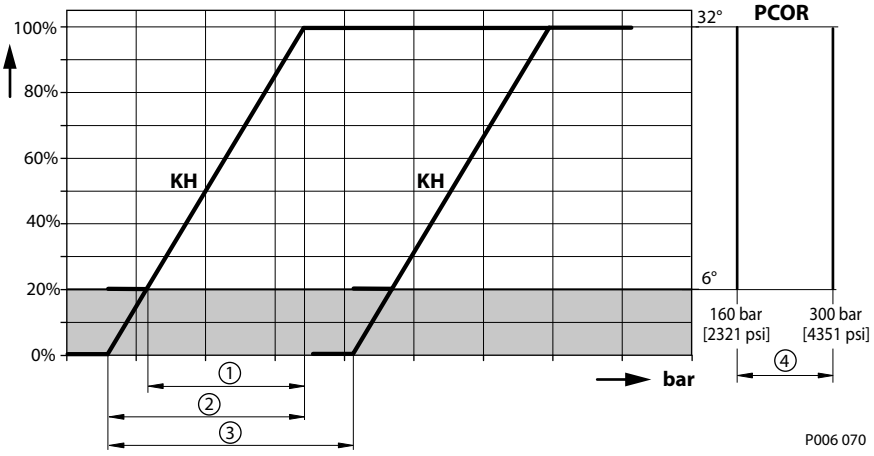

1 = Control ramp, 100% - 20% (14 bar [203 psi])
2 = Control ramp, 100% - 0% (17.5 bar [254 psi])
3 = Control start setting range
4 = PCOR start setting range
Grey area = Intended to be used for zero degree capability.

Hydraulic proportional and two-position controls

Control start setting range (pressure above case pressure)	
p_{start} (possible settings per MMC.- adjustable)	2 to 30 bar [29 to 435 psi]
$P_{max\ allowable}$	Control start setting + 50 bar [725 psi]

Control ramp	
From 100% to 20% displacement	14 bar [203 psi]
From 100% to 0% displacement	17.5 bar [254 psi]

Formulas to calculate start and end input command

Control type	Input command (bar)	% displacement	All sizes (bar)
DH	Start input command	from 100%	$p_{start} \pm 0.5$
		from y% max.	$(1 - V_{gy}/V_{gmax}) \times 17.5 + p_{start} \pm 0.5$
	End input command	at 0%	$p_{start} + 17.5 \pm 2.5$
		at x% min.	$(1 - V_{gx}/V_{gmax}) \times 17.5 + p_{start} \pm 2.5$

Where:

V_{gmax} Maximum, theoretic possible motor displacement per revolution (cm^3/rev)

V_{gx} Minimum displacement setting of desired unit (cm^3/rev)

V_{gy} Maximum displacement setting of desired unit (cm^3/rev)

x Minimum displacement (%)

y Maximum displacement (%)

Pressure Compensator OverRide (PCOR) with Brake Pressure Defeat (BPD) configuration

A brake pressure defeat (BPD) shuttle valve ahead of the pressure compensator prevents operation in the deceleration direction (when motor is running in pump mode). This is designed to prevent rapid or uncontrolled deceleration while the vehicle/machine is slowing down.

Pressure compensator override with brake pressure defeat is mainly used in systems with pumps having electric or hydraulic proportional controls or automotive controls.

The brake pressure defeat must be controlled by a 2-line external signal based on direction of motor rotation, see the following table:

Pressure Compensator OverRide (PCOR) operation

Motor rotation	High pressure port	Control pressure on port[1)]	PCOR function
CW	A	XA	no
CW	A	XB	yes
CCW	B	XA	yes
CCW	B	XB	no

[1)] Differential control pressure between ports XA and XB: p_{min} = 2.5 bar [36 psi] and p_{max} = 50 bar [725 psi]

Warning

Zero degree capability results in a high risk of overspeed and drops in efficiency if the motor operates between 0–20% displacement.

Hydraulic proportional and two-position controls

HEHE option

HE – hydraulic two-position control, default (without control pressure) = max. disp. / external control pressure supply

HE – without PCOR / without BPD, internal servo pressure supply

Hydraulic schematic

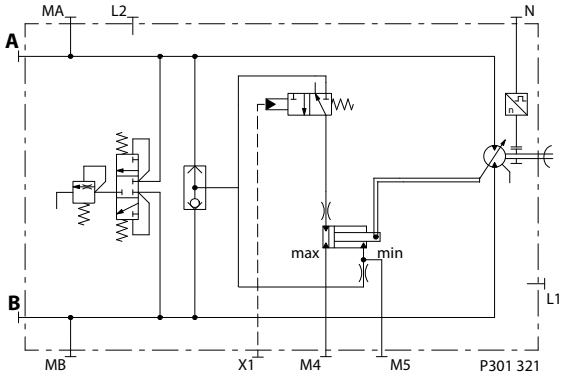

Option HEHE



Where:

A, B	Main pressure lines
L1, L2	Drain lines
M4, M5	Gauge port servo pressure
MA, MB	Gauge port system pressure
X1	Control pressure port
N	Speed sensor (optional)

Control pressure X1

Non-pressurized = max. displacement.
Pressurized = min. displacement.

Control pressure > 12 bar [174 psi] to ensure minimum displacement (above case pressure)
Control pressure < 0.9 bar [13 psi] to ensure maximum displacement (above case pressure)

Maximum control pressure: 100 bar [1450 psi]

Displacement versus control signal

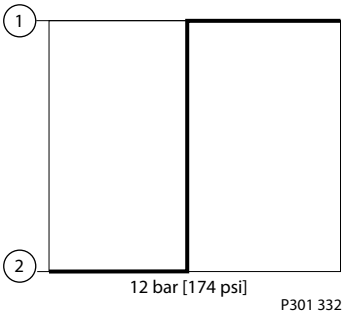

Where:

1	Min. displacement
2	Max. displacement

Hydraulic proportional and two-position controls

HFHF option

HF – hydraulic two-position control, non-pressurized = minimum displacement / external control pressure supply

HF – without PCOR / without BPD, internal servo pressure supply

Hydraulic schematic

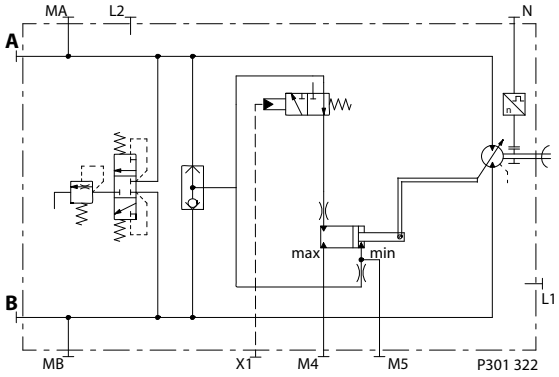

Option HFHF



Where:

A, B	Main pressure lines
L1, L2	Drain lines
M4, M5	Gauge port servo pressure
MA, MB	Gauge port system pressure
X1	Control pressure port
N	Speed sensor (optional)

Control pressure X1

Non-pressurized = Minimum displacement.
Pressurized = Maximum displacement.

Control pressure > 12 bar [174 psi] to ensure maximum displacement (above case pressure)
Control pressure < 0.9 bar [13 psi] to ensure minimum displacement (above case pressure)

Maximum control pressure: 100 bar [1450 psi]

Displacement versus control signal

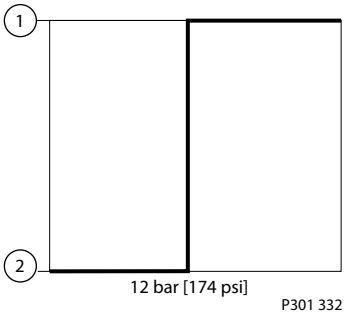

Where:

1	Maximum displacement
2	Minimum displacement

Hydraulic proportional and two-position controls

THHA option with PCOR

TH – hydraulic two-position control, **non-pressurized = min. displacement** / external pressure supply

HA – with Pressure Compensator Over Ride, without BPD

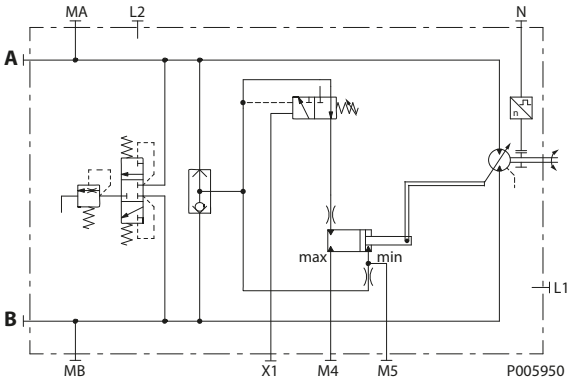

Option THHA



A, B	Main pressure lines
L1, L2	Drain lines
M4, M5	Gauge port servo pressure
MA, MB	Gauge port system pressure
X1	Control pressure port
N	Speed sensor (optional)

Hydraulic actuator X1

Non-pressurized = min. displacement. Full-pressurized = max. displacement.

Min. pressure for activation = 10 bar above case pressure

Max. pressure for activation = 35 bar above motor case pressure

Max. pressure at non-pressurized control port X1 = case pressure

Displacement versus PCOR pressure

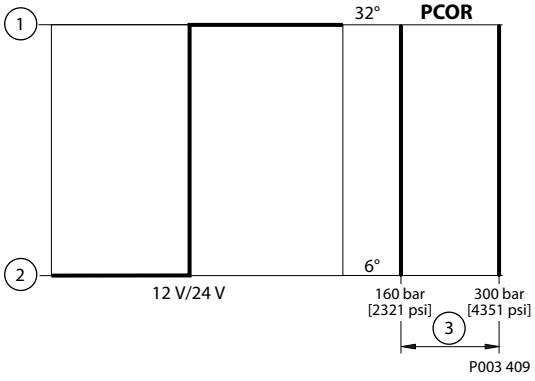

1 Maximum displacement
2 Minimum displacement
3 Start setting range

Hydraulic proportional and two-position controls

Warning

Zero degree capability results in a high risk of overspeed and drops in efficiency if the motor operates between 0–20% displacement.

THHB option with PCOR and hydraulic BPD

TH – hydraulic two-position control, **non-pressurized = min. displacement**/external pressure supply

HB – with Pressure Compensator Over Ride, with hydraulic BPD

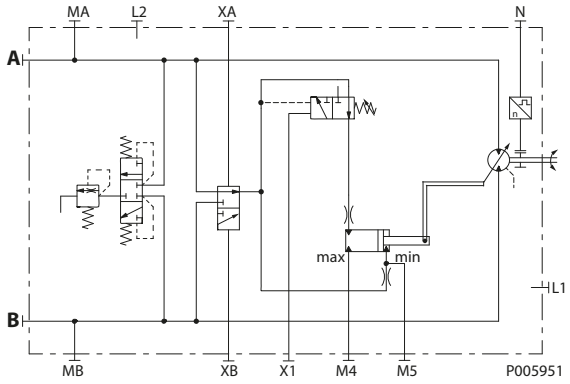

Option THHB



A, B	Main pressure lines
L1, L2	Drain lines
M4, M5	Gauge port servo pressure
MA, MB	Gauge port system pressure
XA, XB	Control pressure ports brake pressure defeat
X1	Control pressure port
N	Speed sensor (optional)

Hydraulic actuator X1

Non-pressurized = min. displacement.

Pressurized = max. displacement.

Min. pressure for activation = 10 bar above case pressure

Max. pressure for activation = 35 bar above motor case pressure

Max. pressure at non-pressurized control port X1 = case pressure

Displacement versus PCOR pressure

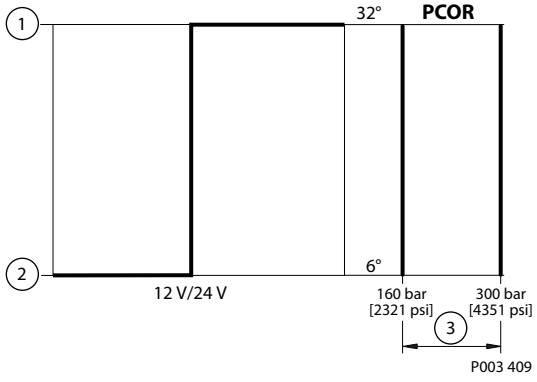

Hydraulic proportional and two-position controls

1 Maximum displacement
2 Minimum displacement
3 Start setting range

Pressure Compensator OverRide with Brake Pressure Defeat configuration

A brake pressure defeat (BPD) shuttle valve ahead of the pressure compensator prevents operation in the deceleration direction (when motor is running in pump mode). This is designed to prevent rapid or uncontrolled deceleration while the vehicle/machine is slowing down.

Pressure compensator override with brake pressure defeat is mainly used in systems with pumps having electric or hydraulic proportional controls or automotive controls.

The brake pressure defeat must be controlled by a 2-line external signal based on direction of motor rotation, see the following table:

Pressure Compensator OverRide (PCOR) operation

Motor rotation	High pressure port	Control pressure on port[1)]	PCOR function
CW	A	XA	yes
CW	A	XB	no
CCW	B	XA	no
CCW	B	XB	yes

[1)] Differential control pressure between ports XA and XB: p_{min} = 2.5 bar [36 psi] and p_{max} = 50 bar [725 psi]

PCOR active port not defined without minimum pressure difference between XA and XB.

Warning

Zero degree capability results in a high risk of overspeed and drops in efficiency if the motor operates between 0–20% displacement.

Pressure compensator over-ride and electric BPD

TADA option

TA – PCOR default; **high pressure below PCOR pressure = min. displacement**
DA – with Pressure Compensator Over Ride / without Brake Pressure Defeat

Warning

This control is not for use in propel applications.

Hydraulic schematic

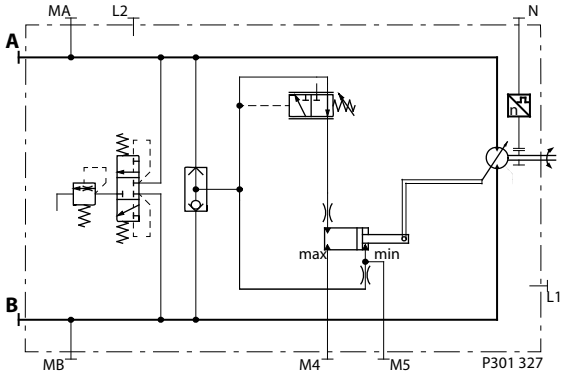

Option TADA



Hydraulic actuator X1
Non-pressurized = min. displacement.
Pressurized = max. displacement.

A, B	Main pressure lines
L1, L2	Drain lines
M4, M5	Gauge port servo pressure
MA, MB	Gauge port system pressure
N	Speed sensor (optional)

Displacement versus PCOR pressure

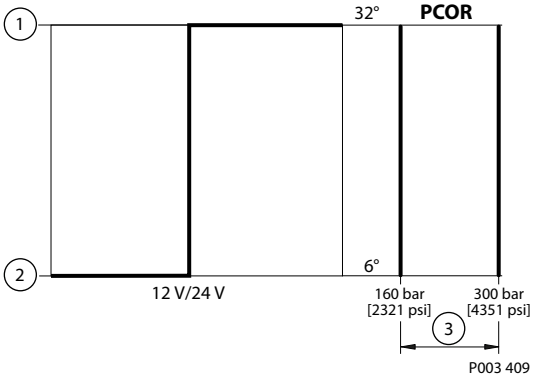

1 Maximum displacement
2 Minimum displacement
3 Start setting range

Pressure compensator over-ride and electric BPD

TAD1 and TAD2 options with electric BPD

TA – PCOR default; **high pressure below PCOR pressure = min. displacement**
D1 – with PCOR / with electric 12V BPD / de-energized BPD = PCOR active at port A
D2 – with PCOR / with electric 24V BPD / de-energized BPD = PCOR active at port A

Hydraulic schematic

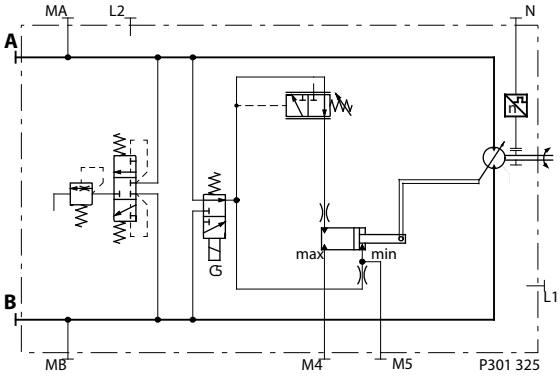

Option TAD1



A, B	Main pressure lines
L1, L2	Drain lines
M4, M5	Gauge port servo pressure
MA, MB	Gauge port system pressure
N	Speed sensor (optional)

Displacement versus PCOR pressure

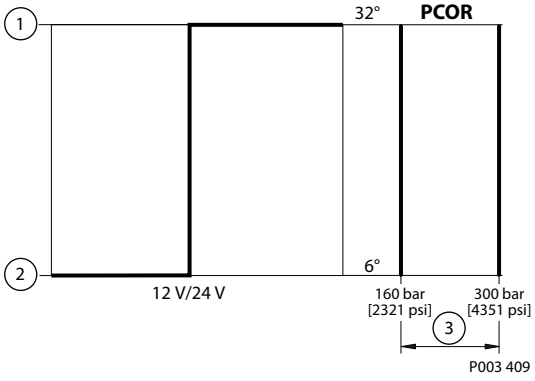

1 Maximum displacement
2 Minimum displacement
3 Start setting range

Two-position control solenoid C5 (BPD) technical data

Description		12 V	24 V
Supply voltage	Minimum	9.5 V_{DC}	19 V_{DC}
	Max. (continuous)	14.6 V_{DC}	29 V_{DC}
Nominal coil resistance @ 20 °C [68 °F]		8.7 Ω	34.5 Ω
Input current	Recommended	1050 mA	500 mA

Pressure compensator over-ride and electric BPD

Description		12 V	24 V
IP Rating	IEC 60 529	IP 67	
	DIN 40 050, part 9	IP 69K with mating connector	
Bi-directional diode		yes	
Connector color		Blue	

Pressure compensator over-ride and electric BPD

TAG1 and TAG2 options

TA – PCOR default; **High pressure below PCOR pressure = min. displacement**
G1 – with PCOR / with electric 12 V BPD / de-energized BPD = PCOR active at port B
G2 – with PCOR / with electric 24 V BPD / de-energized BPD = PCOR active at port B

Hydraulic schematic

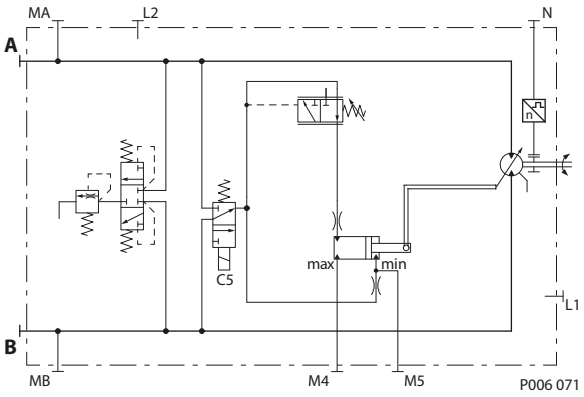

Option TAG1, TAG2



A, B	Main pressure lines
L1, L2	Drain lines
M4, M5	Gauge port servo pressure
MA, MB	Gauge port system pressure
N	Speed sensor (optional)

Displacement versus PCOR pressure

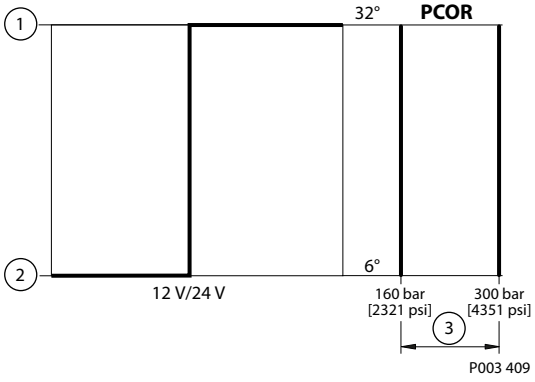

1 Maximum displacement
2 Minimum displacement
3 Start setting range

Default: High pressure below PCOR pressure = min. displacement

Flange and housing dimensions

SAE flange design – option L* (proportional control)

Axial ports

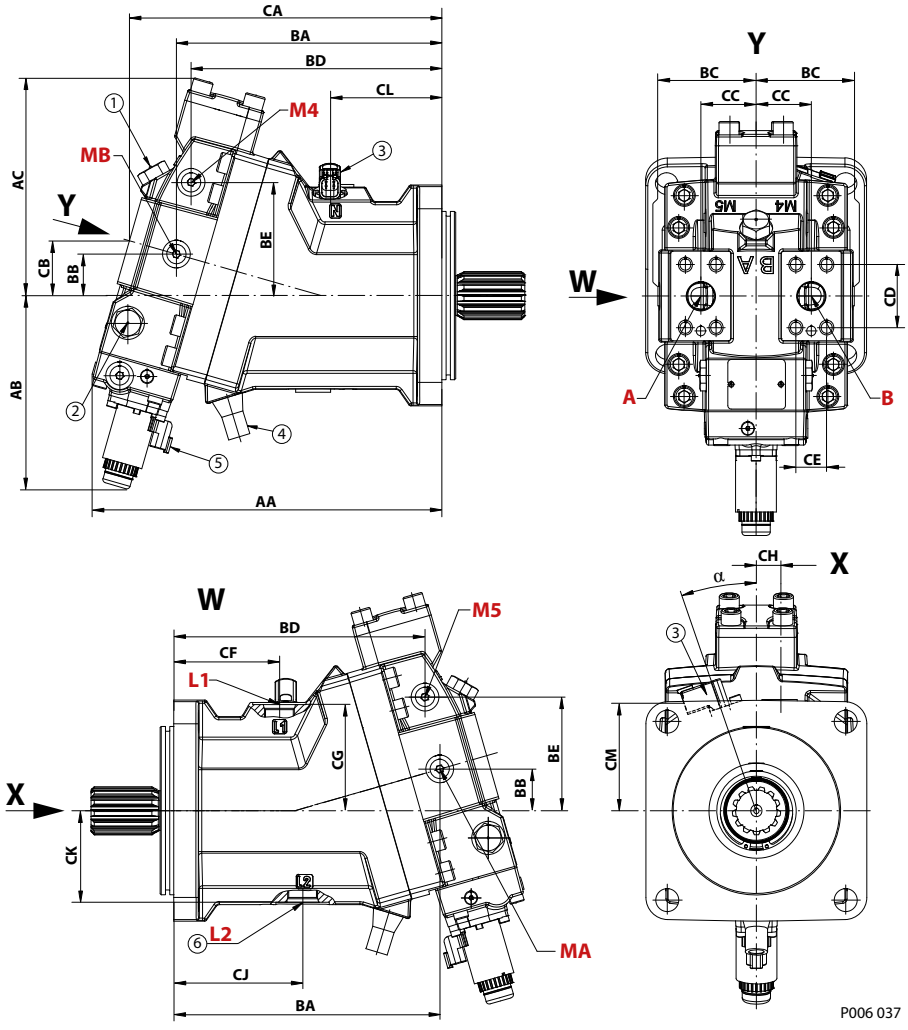

Radial ports

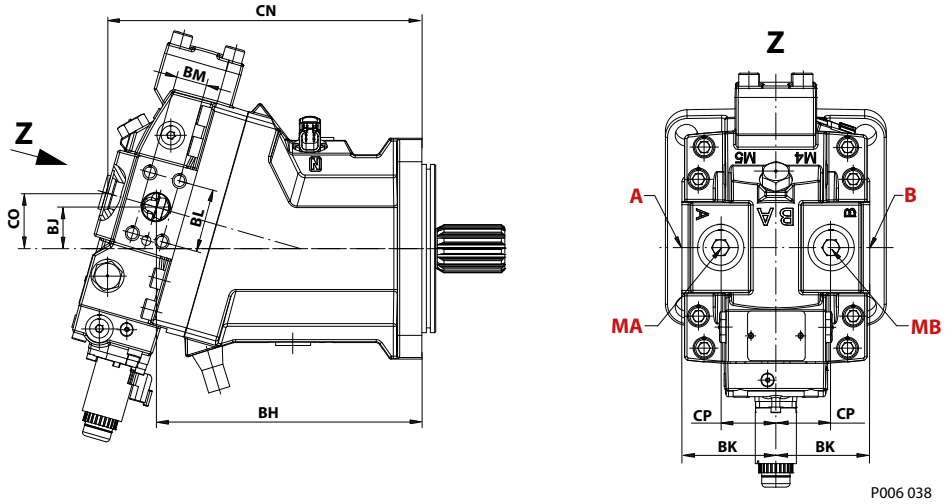

Flange and housing dimensions

Axial and radial ports dimensions, mm [in]

Callout	Size 060	Size 080	Size 110	Size 160	Size 210	Size 250
AA	272.3 [10.72]	289.9 [11.41]	316.4 [12.46]	343.6 [13.53]	368.4 [14.5]	387 [15.24]
AB	164.7 [6.48]	170.6 [6.72]	175.0 [6.89]	183.8 [7.24]	190.9 [7.52]	197 [7.76]
AC	167.5 [6.59]	179.9 [7.08]	196.9 [7.75]	219.7 [8.65]	232.6 [9.16]	239 [9.41]
BA	204.8 [8.06]	218.8 [8.61]	240.3 [9.46]	263.9 [10.39]	288.1 [11.34]	302 [11.89]
BB	32.3 [1.27]	34.7 [1.37]	37.5 [1.49]	42.0 [1.65]	46.4 [1.83]	48 [1.89]
BC	74.4 [2.93]	78.4 [3.09]	88.9 [3.50]	99.9 [3.93]	108.2 [4.26]	108 [4.25]
BD	191.0 [7.52]	203.9 [8.03]	226.9 [8.93]	247.9 [9.76]	268.3 [10.56]	284 [11.18]
BE	84.0 [3.30]	92.4 [3.64]	102.5 [4.04]	115.4 [4.54]	123.5 [4.86]	127 [5.00]
BH	204.8 [8.06]	218.8 [8.61]	240.3 [9.46]	263.9 [10.39]	288.1 [11.34]	302 [11.89]
BJ	32.3 [1.27]	34.7 [1.37]	37.5 [1.48]	42.0 [1.65]	46.4 [1.83]	48 [1.89]
BK	69.5 [2.74]	75.2 [2.96]	85.0 [3.35]	96.0 [3.78]	104.3 [4.11]	108 [4.25]
BL	50.8 [2.00]	57.2 [2.25]	57.2 [2.25]	66.6 [2.62]	66.6 [2.62]	66.6 [2.62]
BM	23.8 [0.94]	27.8 [1.09]	27.8 [1.09]	31.8 [1.25]	31.8 [1.25]	31.8 [1.25]
CA	243.7 [9.59]	258.7 [10.19]	282.6 [11.13]	306.9 [12.08]	327.9 [12.91]	345 [13.58]
CB	43.4 [1.71]	46.2 [1.82]	49.6 [1.95]	54.4 [2.14]	57.8 [2.28]	60 [2.36]
CC	48 [1.89]	50 [1.97]	50 [1.97]	60 [2.36]	65 [2.56]	65 [2.56]
CD	50.8 [2.00]	57.2 [2.25]	57.2 [2.25]	66.6 [2.62]	66.6 [2.62]	66.6 [2.62]
CE	23.8 [0.94]	27.8 [1.09]	27.8 [1.09]	31.8 [1.25]	31.8 [1.25]	31.8 [1.25]
CF	69.5 [2.74]	67.7 [2.67]	95.5 [3.76]	86.4 [3.40]	98.9 [3.89]	107 [4.21]
CG	85.8 [3.38]	90 [3.54]	96 [3.78]	102.2 [4.02]	108.5 [4.27]	112 [4.41]
CH	18 [0.71]	17 [0.67]	21 [0.83]	23 [0.91]	25 [0.98]	25 [0.98]
CJ	92.5 [3.64]	104 [4.09]	119.5 [4.70]	122.8 [4.83]	136.3 [5.37]	141.5 [5.57]
CK	70 [2.76]	75 [2.95]	83 [3.27]	96.5 [3.80]	103.5 [4.07]	107.5 [4.23]
CL	83.4 [3.28]	89.3 [3.52]	101.3 [3.99]	107.7 [4.24]	116.9 [4.6]	124 [4.88]
CM	89.3 [3.52]	93.7 [3.69]	97.2 [3.83]	105.6 [4.16]	111.2 [4.38]	130 [5.12]
CN	244.8 [9.64]	258.7 [10.19]	283.6 [11.17]	307.9 [12.12]	328.9 [12.95]	346 [12.83]
CO	43.7 [1.72]	46.2 [1.82]	49.9 [1.96]	54.6 [2.15]	48.1 [1.89]	61 [2.4]
CP	48 [1.89]	50 [1.97]	50 [1.97]	60 [2.36]	65 [2.56]	65 [2.56]
α	17°	17°	19°	17°	17°	17°

For further detailed information about SAE ports dimensions see the *SAE flange design ports per ISO 11 926-1* on page 101.

Legend:
1 Loop flushing relief valve
2 Loop flushing shuttle spool
3 Speed sensor
4 Minimum angle stop adjustment
5 *Connector:* DEUTSCH DT04-2P
6 Alternate position of case drain port

Flange and housing dimensions

SAE flange design – option M* (proportional control)

Axial ports

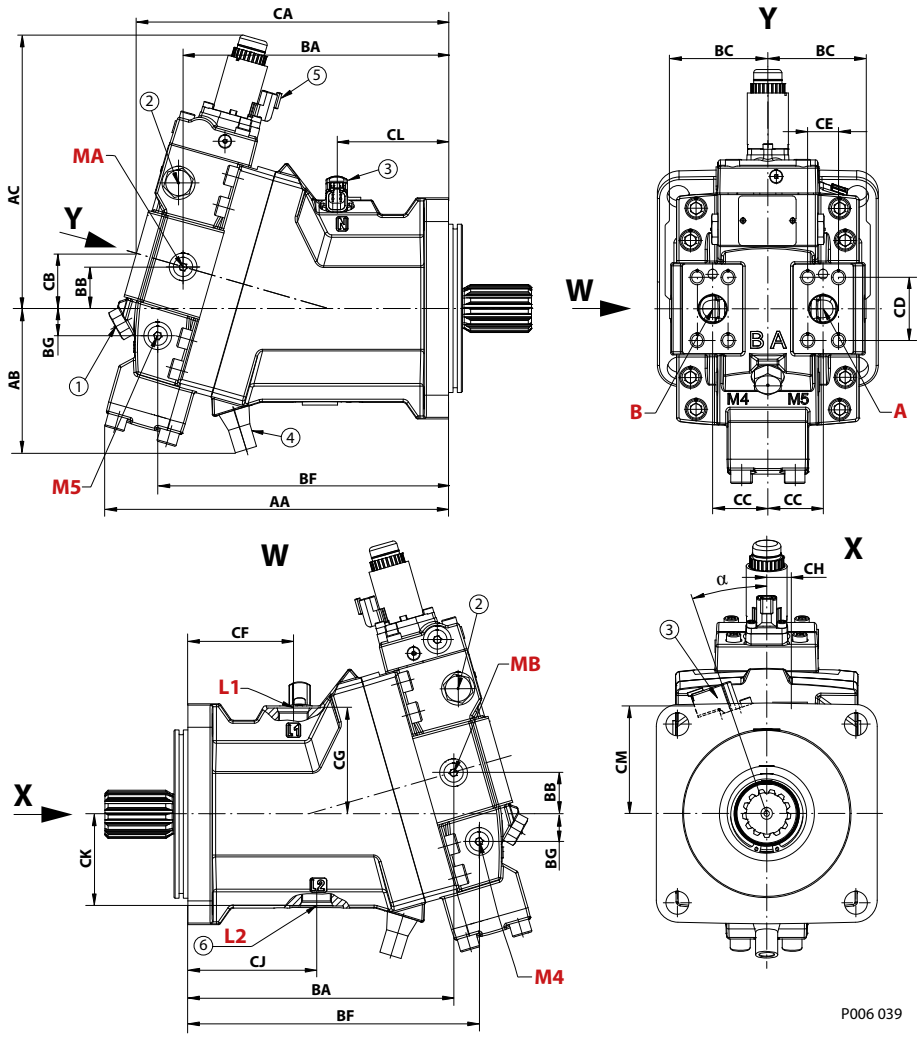

Radial ports

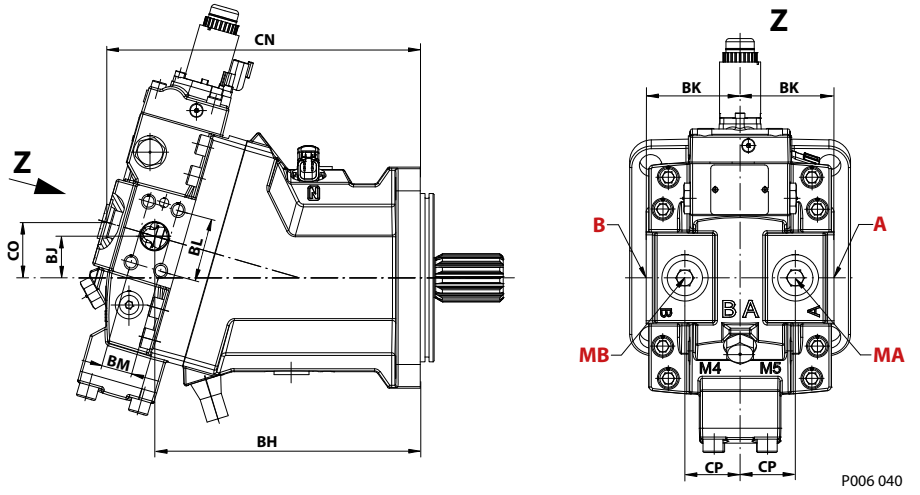

Flange and housing dimensions

Axial and radial ports dimensions, mm [in]

Measure	Size 060	Size 080	Size 110	Size 160	Size 210	Size 250
AA	265.0 [10.43]	283.2 [11.15]	311.0 [12.24]	339.7 [13.37]	363.9 [14.33]	381.0 [15.00]
AB	114.7 [4.52]	119.4 [4.70]	130.8 [5.15]	138.2 [5.44]	145.5 [5.73]	152.0 [5.98]
AC	224.2 [8.83]	235.7 [9.28]	247.2 [9.73]	265.0 [10.43]	279.4 [11]	290.0 [11.42]
BA	204.8 [8.06]	218.8 [8.61]	240.3 [9.46]	263.9 [10.39]	288.1 [11.34]	302.0 [11.89]
BB	32.3 [1.27]	34.7 [1.37]	37.5 [1.48]	42.0 [1.65]	46.4 [1.83]	48.0 [1.89]
BC	74.4 [2.93]	78.4 [3.09]	88.9 [3.50]	99.9 [3.93]	108.2 [4.26]	108.0 [4.25]
BF	220.5 [8.68]	236.7 [9.32]	263.4 [10.37]	289.2 [11.39]	312.1 [12.29]	329.0 [12.95]
BG	18.9 [0.74]	22.0 [0.87]	24.8 [0.98]	28.6 [1.13]	29.5 [1.16]	28.0 [1.1]
BH	204.7 [8.06]	218.8 [8.61]	240.3 [9.46]	263.9 [10.39]	288.1 [11.34]	302.0 [11.89]
BJ	32.3 [1.27]	34.7 [1.37]	37.5 [1.48]	42.0 [1.65]	46.4 [1.83]	48.0 [1.89]
BK	69.5 [2.74]	75.2 [2.96]	85.0 [3.35]	96.0 [3.78]	104.3 [4.11]	108.0 [4.25]
BL	50.8 [2.00]	57.2 [2.25]	57.2 [2.25]	66.6 [2.62]	66.6 [2.62]	66.6 [2.62]
BM	23.8 [0.94]	27.8 [1.09]	27.8 [1.09]	31.8 [1.25]	31.8 [1.25]	31.8 [1.25]
CA	243.7 [9.59]	258.7 [10.19]	282.6 [11.13]	306.9 [12.08]	327.9 [12.91]	345.0 [13.58]
CB	43.4 [1.71]	46.2 [1.82]	49.6 [1.95]	54.4 [2.14]	57.8 [2.28]	60.0 [2.36]
CC	48.0 [1.89]	50.0 [1.97]	50.0 [1.97]	60.0 [2.36]	65 [2.56]	65.0 [2.56]
CD	50.8 [2.00]	57.2 [2.25]	57.2 [2.25]	66.6 [2.62]	66.6 [2.62]	66.6 [2.62]
CE	23.8 [0.94]	27.8 [1.09]	27.8 [1.09]	31.8 [1.25]	31.8 [1.25]	31.8 [1.25]
CF	69.5 [2.74]	67.7 [2.67]	95.5 [3.76]	86.4 [3.40]	98.9 [3.89]	107.0 [4.21]
CG	85.8 [3.38]	90.0 [3.54]	96.0 [3.78]	102.2 [4.02]	108.5 [4.27]	112.0 [4.41]
CH	18.0 [0.71]	17.0 [0.67]	21.0 [0.83]	23.0 [0.91]	25 [0.98]	25.0 [0.98]
CJ	92.5 [3.64]	104.0 [4.09]	119.5 [4.70]	122.8 [4.83]	136.3 [5.37]	141.5 [5.57]
CK	70.0 [2.76]	75.0 [2.95]	83.0 [3.27]	96.5 [3.80]	103.5 [4.07]	107.5 [4.23]
CL	83.4 [3.28]	89.3 [3.52]	101.3 [3.99]	107.7 [4.24]	116.9 [4.6]	124.0 [4.88]
CM	89.3 [3.52]	93.7 [3.69]	97.2 [3.83]	105.6 [4.16]	111.2 [4.38]	130.0 [5.12]
CN	244.8 [9.64]	258.7 [10.19]	283.6 [11.17]	307.9 [12.12]	328.9 [12.95]	346.0 [12.83]
CO	43.7 [1.72]	46.2 [1.82]	49.9 [1.96]	54.6 [2.15]	58.1 [2.29]	61.0 [2.4]
CP	48.0 [1.89]	50.0 [1.97]	50.0 [1.97]	60.0 [2.36]	65 [2.56]	65.0 [2.56]
α	17°	17°	19°	17°	17°	17°

For further detailed information about SAE ports dimensions see the *SAE flange design ports per ISO 11 926-1* on page 101.

Legend:
1 Loop flushing relief valve
2 Loop flushing shuttle spool
3 Speed sensor
4 Minimum angle stop adjustment
5 *Connector:* DEUTSCH DT04-2P
6 Alternate position of case drain port

Flange and housing dimensions

SAE flange design – options T* D* and P* D* (two-position control, PCOR, electric BPD)

Axial ports

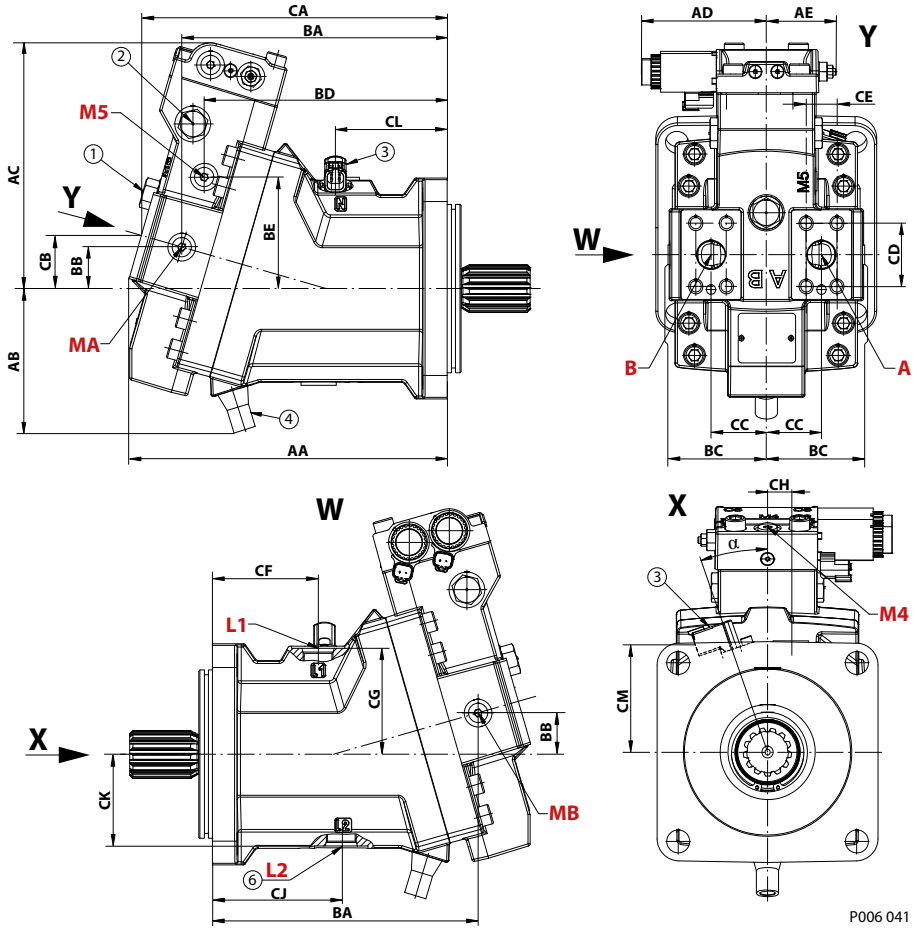

Radial ports

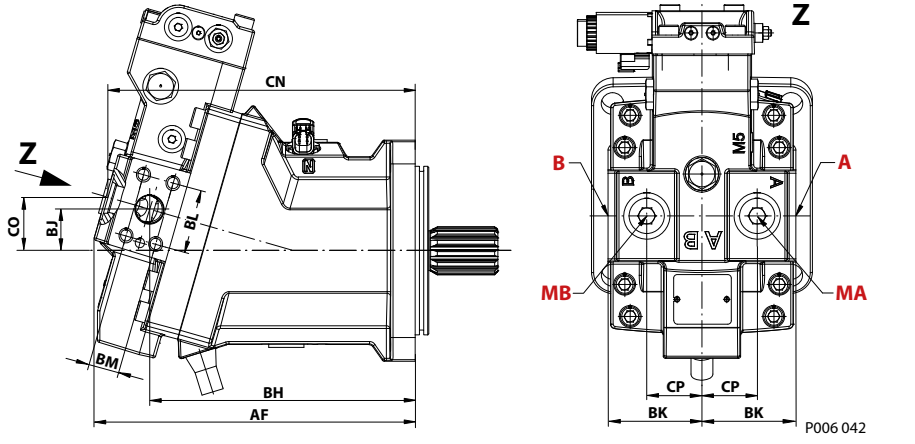

Legend:

1 Loop flushing relief valve
2 Loop flushing shuttle spool
3 Speed sensor
4 Minimum angle stop adjustment
5 *Connector:* DEUTSCH DT04-2P
6 Alternate position of case drain port

Flange and housing dimensions

Axial and radial ports dimensions, mm [in]

Code	Size 060	Size 080	Size 110	Size 160	Size 210	Size 250
AA	243 [9.57]	261.4 [10.29]	288 [11.34]	314.9 [12.4]	341.1 [13.43]	359 [14.13]
AB (without min. adjustment screw)	114.7 [4.52]	119.4 [4.7]	130.8 [5.15]	138.2 [5.44]	145.5 [5.73]	152 [5.98]
AB (MB0)	86.5 [3.41]	92.2 [3.63]	102.6 [4.04]	109.8 [4.32]	130 [5.12]	145.7 [5.74]
AC	193.6 [7.62]	206.6 [8.13]	224.1 [8.82]	242.5 [9.55]	257.7 [10.15]	267 [10.51]
AD	112.7 [4.44]	112.7 [4.44]	112.7 [4.44]	112.7 [4.44]	112.7 [4.44]	112.7 [4.44]
AE	max 67.3 [2.65]	max 67.3 [2.65]	max 67.3 [2.65]	max 67.3 [2.65]	max 67.3 [2.65]	max 67.3 [2.65]
AF	254.3 [9.66]	263.5 [10.37]	290.4 [11.43]	314.9 [12.39]	341.1 [13.43]	359 [14.13]
BA	205.1 [8.07]	219.1 [8.63]	240.3 [9.46]	263.9 [10.39]	288.1 [11.34]	302 [11.89]
BB	32.3 [1.27]	34.7 [1.37]	37.5 [1.49]	42 [1.65]	46.4 [1.83]	48 [1.89]
BC	74.4 [2.93]	78.4 [3.09]	88.9 [3.5]	99.9 [3.93]	108.2 [4.26]	108 [4.25]
BD	189.8 [7.47]	198 [7.8]	220 [8.66]	243.9 [9.6]	268 [10.55]	281 [11.06]
BE	83.8 [3.30]	90.6 [3.57]	100.9 [3.97]	111.7 [4.4]	120.8 [4.76]	125 [4.92]
BH	205.1 [8.07]	218.8 [8.61]	240.3 [9.46]	263.9 [10.39]	288.1 [11.34]	302 [11.89]
BJ	32.3 [1.27]	34.7 [1.37]	37.5 [1.48]	42.0 [1.65]	46.4 [1.83]	48 [1.89]
BK	69.5 [2.74]	75.2 [2.96]	85.0 [3.35]	96.0 [3.78]	104.3 [4.11]	108 [4.25]
BL	50.8 [2.00]	57.2 [2.25]	57.2 [2.25]	66.6 [2.62]	66.6 [2.62]	66.6 [2.62]
BM	23.8 [0.94]	27.8 [1.09]	27.8 [1.09]	31.8 [1.25]	31.8 [1.25]	31.8 [1.25]
CA	233.8 [9.2]	250.2 [9.85]	276.8 [10.9]	298.9 [11.78]	323.1 [12.72]	338 [13.31]
CB	40.6 [1.6]	43.7 [1.72]	48 [1.89]	52.1 [2.05]	56.1 [2.21]	59 [2.32]
CC	48 [1.89]	50 [1.97]	50 [1.97]	60 [2.36]	65 [2.56]	65 [2.56]
CD	50.8 [2.00]	57.2 [2.25]	57.2 [2.25]	66.6 [2.62]	66.6 [2.62]	66.6 [2.62]
CE	23.8 [0.94]	27.8 [1.09]	27.8 [1.09]	31.8 [1.25]	31.8 [1.25]	31.8 [1.25]
CF	69.5 [2.74]	67.7 [2.67]	95.5 [3.76]	86.4 [3.40]	98.9 [3.89]	107 [4.21]
CG	85.8 [3.38]	90 [3.54]	96 [3.78]	102.2 [4.02]	108.5 [4.27]	112 [4.41]
CH	18 [0.71]	17 [0.67]	21 [0.83]	23 [0.91]	25 [0.98]	25 [0.98]
CJ	92.5 [3.64]	104 [4.09]	119.5 [4.70]	122.8 [4.83]	136.3 [5.37]	141.5 [5.57]
CK	70 [2.76]	75 [2.95]	83 [3.27]	96.5 [3.80]	103.5 [4.07]	107.5 [4.23]
CL	83.4 [3.28]	89.3 [3.52]	101.3 [3.99]	107.7 [4.24]	116.9 [4.6]	124 [4.88]
CM	89.3 [3.52]	93.7 [3.69]	97.2 [3.83]	105.6 [4.16]	111.2 [4.38]	130 [5.12]
CN	234.1 [9.22]	250.6 [9.87]	277.8 [10.94]	298.9 [11.78]	323.8 [12.75]	339 [13.35]
CO	40.7 [1.6]	43.8 [1.72]	48.2 [1.9]	52.3 [2.06]	56.6 [2.23]	59 [2.32]
CP	48 [1.89]	50 [1.97]	50 [1.97]	60 [2.36]	65 [2.56]	65 [2.56]
α	17°	17°	19°	17°	17°	17°

For further detailed information about SAE ports dimensions see the *SAE flange design ports per ISO 11 926-1* on page 101.

Flange and housing dimensions

SAE flange design ports per ISO 11 926-1

Ports dimensions per ISO 11 926-1; mm [in]

Ports	Port Config	Size 060	Size 080	Size 110	Size 160	Size 210	Size 250
L1, L2 Case drain	Inch	7/8-14; Ø42 [1.65][1]		1 1/16-12; Ø48.5 [1.91][1]		1 5/16-12; Ø50.1 [1.97][1]	
	Metric	M22x1.5		M27x2.0		M33x2.0	
A, B Split flange boss system	Inch	DN 19 (Ø19 mm) [2] M10x1.5; 18 [0.71]	DN 25 (Ø25 mm) [2] M12x1.75; 23 [0.91]		DN 32 (Ø32 mm) [2] M12x1.75; 23 [0.91]		
	Metric						
MA, MB (axial HP ports) System pressure A, B gauge[3]	Inch	9/16–18; Ø25.0 [0.984] [1]					
	Metric	M14x1.5					
MA, MB (radial HP ports) System pressure A, B gauge[3]	Inch	7/8-14 Ø34.0 [1.34] [1]	1 1/16-12; Ø42.0 [1.65][1]				
	Metric	M22x1.5	M27x2.0				
M4, M5 Servo pressure supply gauge	Inch	9/16–18; Ø25.0 [0.984] [1]					
	Metric	M14x1.5					

[1] Max. clearance DIA for fitting.

[2] Typ 1, 40 MPa series per ISO 6162. Full thread depth.

[3] Countersink may be deeper that specified in the standard.

For further detailed information about SAE dimensions see:

- *SAE flange design – option L* (proportional control)* on page 95
- *SAE flange design – option M* (proportional control)* on page 97
- *SAE flange design – options T* D* and P* D* (two-position control, PCOR, electric BPD)* on page 99

Flange and housing dimensions

SAE mounting flange design per ISO 3019/1

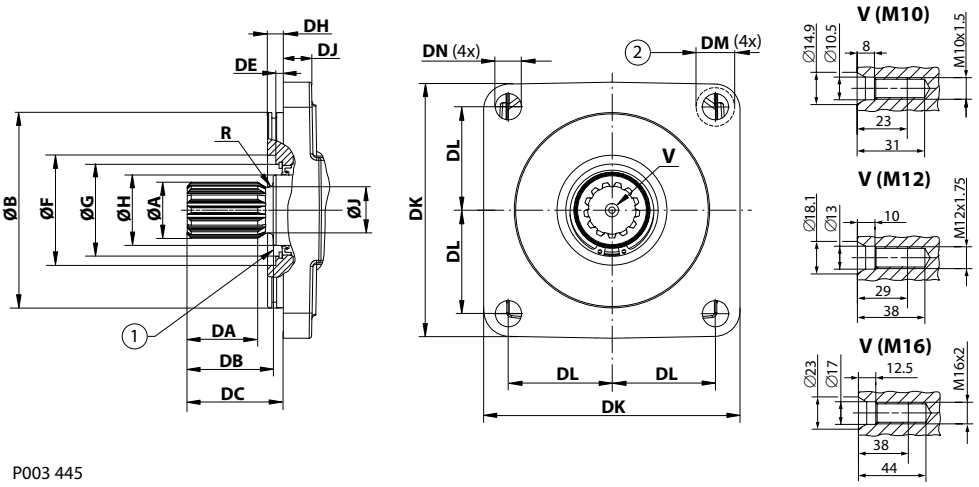

P003 445

1. Coupling must not protrude beyong this surface
2. Maximum screw head space other side

SAE flange dimensions mm [in]

Measure	Size 060/080 – Flange 127-4	Size 110/160 – Flange 152-4	Size 210/250 – Flange 165-4
ØB	126.975 [4.999]	152.375 [5.999]	165.075 [6.5]
ØF	80 [3.15]	86 [3.386]	100 [3.937]
ØG	62 [2.441]	72 [2.835]	72 [2.835]
DE	6.4 [0.252]	6.0 [0.236]	6.4 [0.252]
DH	12.5 [0.492]	12.5 [0.492]	15.65 [0.62]
DJ	18 [0.709] - size 060 19 [0.748] - size 080	22.0 [0.866]	25 [0.98]
DK	142.5 [5.61]	200 [7.874]	260.0 [10.24]
DL	57.3 [2.256]	80.8 [3.181]	112.2 [4.42]
DM	19.5 [0.768]	30 [1.181]	30 [1.181]
DN	14.3 [0.563]	20.6 [0.811]	20.6 [0.811]

Shaft options overview (Number of teeth)

Size	AN/AS (14T)	BN/BS (21T)	CN/CS (23T)	DN/DS (27T)	EN/ES (13T)	FN/FS (15T)
060	●	●	—	—	—	—
080	●	●	●	—	—	—
110	—	—	—	●	●	—
160	—	—	—	●	●	●
210	—	—	—	●	—	●
250	—	—	—	●	—	●

● = available option, – = not available option

Flange and housing dimensions

Shaft dimensions; mm [in]

Shaft option	EN/ES	AN/AS	FN/FS	BN/BS	CN/CS	DN/DS
Teeth	**13**	**14**	**15**	**21**	**23**	**27**
Module	8/16	12/24	8/16	16/32	16/32	16/32
Pitch-Ø	41.275 [1.625]	29.633 [1.167]	47.625 [1.875]	33.337 [1.312]	36.513 [1.438]	42.862 [1.687]
Spline	ANSI B92.1-1970 Class 5 flat root side fit					
ØA	43.6 [1.717]	31.2 [1.228]	49.96 [1.966]	34.4 [1.315]	37.61 [1.48]	44.0 [1.732]
ØH	55.0 [2.165]	44.5 [1.752]	55.0 [2.165]	44.5 [1.752]	44.5 [1.752]	55.0 [2.165]
ØJ	36.0 [1.417]	25.8 [1.016]	42.2 [1.661]	30.0 [1.181]	32.0 [1.260]	39.6 [1.559]
DA	55.0 [2.165]	37.5 [1.476]	53.0 [2.087]	37.5 [1.476]	37.5 [1.476]	55.0 [2.165]
DB	67.0 [2.638]	47.5 [1.870]	67.0 [2.638]	47.5 [1.870]	47.5 [1.870]	67.0 [2.638]
DC	75.0 [2.953] 75.4 [2.968]*	55.5 [2.185]	75.0 [2.953] 75.4 [2.968]*	55.5 [2.185]	55.5 [2.185]	75.0 [2.953] 75.4 [2.968]*
R	3.0 [0.118]	3.0 [0.118]	3.0 [0.118]	3.0 [0.118]	3.0 [0.118]	3.0 [0.118]
V	M12	M10	M16	M10	M12	M16
Angle	Pressure angle 30°					

* Size 160 only

For DIN 5480 shaft used in combination with SAE flanges, please contact your local Danfoss Power Solutions representative.

O-ring groove dimensions

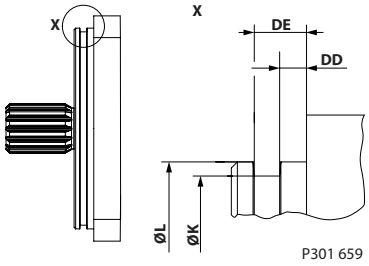

O-ring groove dimensions; mm [in]

Measure	Size 060/080	Size 110/160	Size 210/250
Ø K	122.3 [4.81]	147.7 [5.81]	160.4 [6.31]
Ø L	127.0 [5.0]	152.4 [6.0]	165.1 [6.5]
DD	4.45 [0.175]	4.45 [0.175]	6.65 [0.262]
DE	8.65 [0.341]	8.65 [0.341]	10.85 [0.427]
O-ring*	3 x 116	3 x 142	3 x 154
Material Nr.	930511	729285	729319

* Recommended O-ring. It is not part of the shipment.

An O-ring groove was added to the SAE housing in September 2013 to facilitate sealing between the motor and mating structures. Motor installations will vary by application. It is the customer's responsibility to evaluate each application for proper mounting and sealing.

Flange and housing dimensions

DIN flange design – option L* (proportional control)

Axial ports

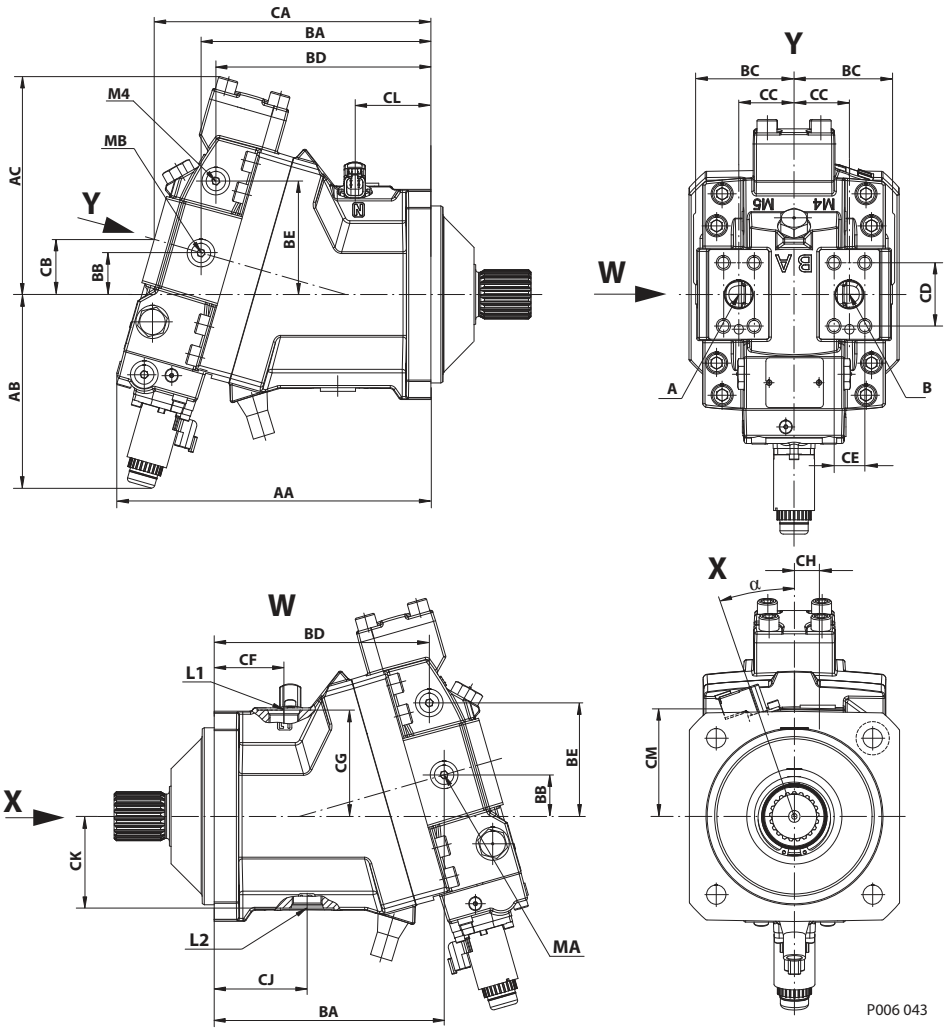

Radial ports

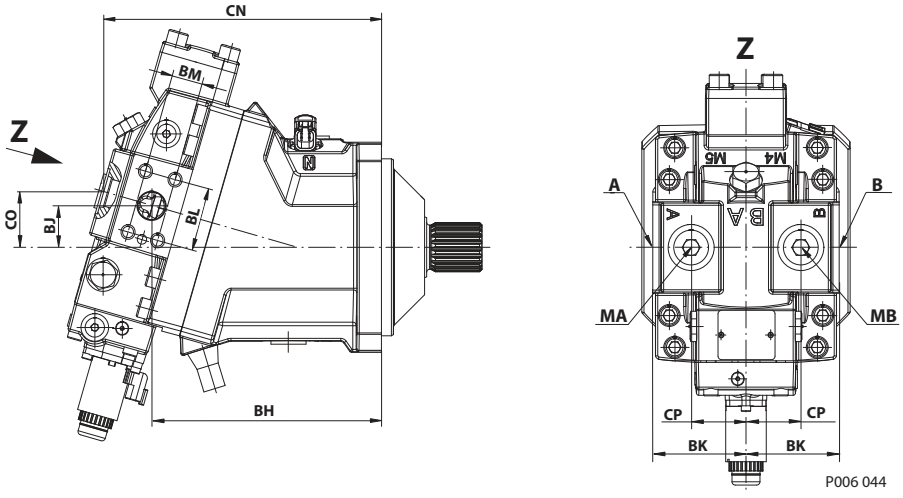

Flange and housing dimensions

Axial and radial ports dimensions, mm [in]

Measure	Size 060	Size 080	Size 110	Size 160	Size 210	Size 250
AA	247.8 [9.76]	265.9 [10.47]	283.9 [11.18]	311.7 [12.27]	336.6 [13.25]	345.2 [13.60]
AB	164.7 [6.48]	170.6 [6.72]	175.0 [6.89]	183.8 [7.24]	190.9 [7.52]	197.0 [7.76]
AC	167.5 [6.59]	179.9 [7.08]	196.9 [7.75]	219.7 [8.65]	232.6 [9.16]	238.4 [9.39]
BA	180.3 [7.10]	194.8 [7.67]	207.8 [8.18]	232.0 [9.13]	256.1 [10.08]	260.0 [10.24]
BB	32.3 [1.27]	34.7 [1.37]	37.5 [1.49]	42.0 [1.65]	46.4 [1.83]	48.1 [1.89]
BC	74.4 [2.93]	78.4 [3.09]	88.9 [3.50]	99.9 [3.93]	108.2 [4.26]	108.8 [4.28]
BD	165.5 [6.56]	179.9 [7.08]	194.4 [7.65]	216.0 [8.50]	236.3 [9.3]	242.2 [9.54]
BE	84.0 [3.30]	92.4 [3.64]	102.5 [4.04]	115.4 [4.54]	123.5 [4.86]	126.9 [5.00]
BH	180.3 [7.10]	194.8 [7.67]	207.8 [8.18]	232.0 [9.13]	256.1 [10.08]	260.0 [10.24]
BJ	32.3 [1.27]	34.7 [1.37]	37.5 [1.48]	42.0 [1.65]	46.4 [1.83]	48.1 [1.89]
BK	69.5 [2.74]	75.2 [2.96]	85.0 [3.35]	96.0 [3.78]	104.3 [4.11]	107.8 [4.24]
BL	50.8 [2.00]	57.2 [2.25]	57.2 [2.25]	66.6 [2.62]	66.6 [2.62]	66.6 [2.62]
BM	23.8 [0.94]	27.8 [1.09]	27.8 [1.09]	31.8 [1.25]	31.8 [1.25]	31.8 [1.25]
CA	219.2 [8.63]	234.7 [9.24]	250.1 [9.84]	275.0 [10.83]	295.9 [11.65]	302.6 [11.91]
CB	43.4 [1.71]	46.2 [1.82]	49.6 [1.95]	54.4 [2.14]	57.8 [2.28]	60.3 [2.37]
CC	48.0 [1.89]	50.0 [1.97]	50.0 [1.97]	60.0 [2.36]	65 [2.56]	65.0 [2.56]
CD	50.8 [2.00]	57.2 [2.25]	57.2 [2.25]	66.6 [2.62]	66.6 [2.62]	66.6 [2.62]
CE	23.8 [0.94]	27.8 [1.09]	27.8 [1.09]	31.8 [1.25]	31.8 [1.25]	31.8 [1.25]
CF	45.0 [1.77]	46.0 [1.81]	63.0 [2.48]	54.5 [2.15]	66.9 [2.63]	65.0 [2.56]
CG	85.8 [3.38]	90.0 [3.54]	96.0 [3.78]	102.2 [4.02]	108.5 [4.27]	112.2 [4.42]
CH	18.0 [0.71]	22.0 [0.87]	21.0 [0.83]	23.0 [0.91]	25 [0.98]	25.0 [0.98]
CJ	68.0 [2.68]	80.0 [3.15]	87.0 [3.43]	90.9 [3.58]	104.3 [4.11]	99.4 [3.91]
CK	70.0 [2.76]	75.0 [2.95]	83.0 [3.27]	96.5 [3.80]	103.5 [4.07]	107.5 [4.23]
CL	58.9 [2.32]	65.3 [2.57]	68.8 [2.71]	75.8 [2.98]	84.9 [3.34]	82.3 [3.24]
CM	89.3 [3.52]	93.7 [3.69]	97.2 [3.83]	105.6 [4.16]	111.2 [4.38]	118.0 [4.65]
CN	220.3 [8.67]	234.7 [9.24]	251.1 [9.89]	276.0 [10.87]	296.9 [11.69]	303.6 [11.95]
CO	43.7 [1.72]	46.2 [1.82]	49.9 [1.96]	54.6 [2.15]	58.1 [2.29]	60.6 [2.39]
CP	48.0 [1.89]	50.0 [1.97]	50.0 [1.97]	60.0 [2.36]	65 [2.56]	65.0 [2.56]
α	17°	17°	19°	17°	17°	17°

For further detailed information about DIN ports dimensions see the *DIN flange design ports per ISO 11 926-1* on page 110.

Legend:
1 Loop flushing relief valve
2 Loop flushing shuttle spool
3 Speed sensor
4 Minimum angle stop adjustment
5 *Connector:* DEUTSCH DT04-2P
6 Alternate position of case drain port

Flange and housing dimensions

DIN flange design – option M* (proportional control)

Axial ports

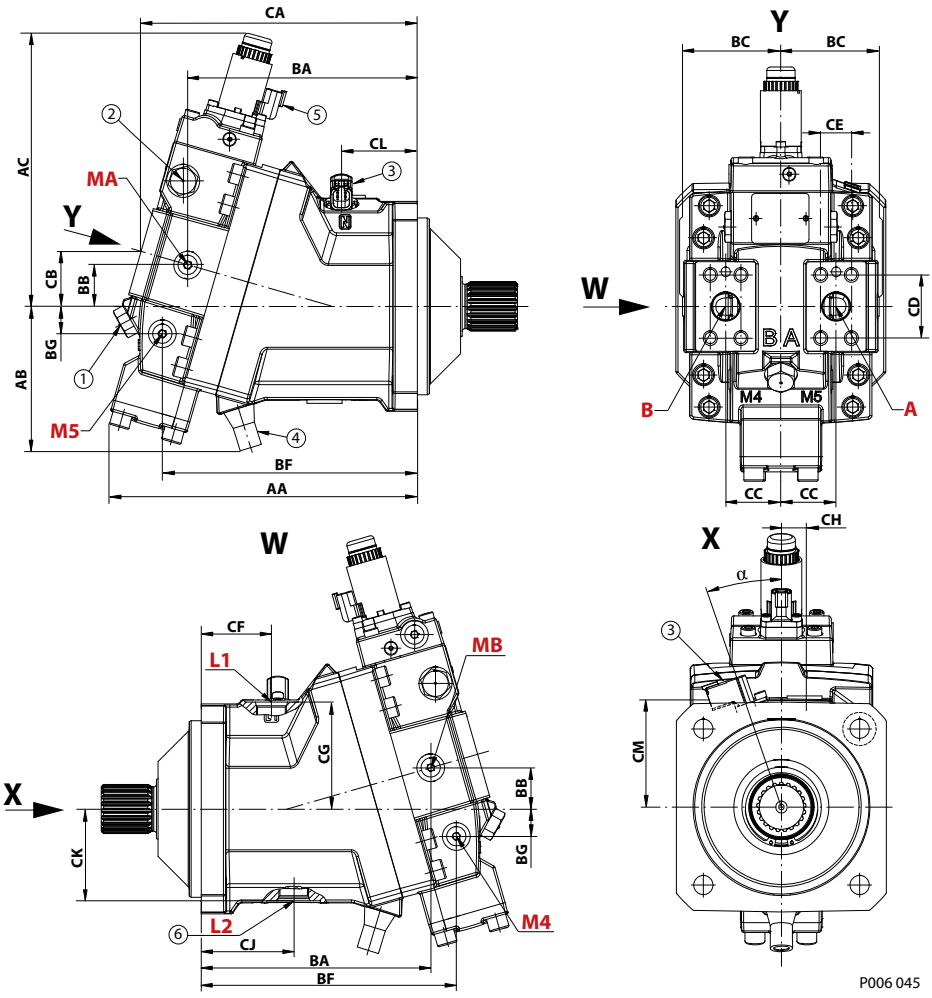

Radial ports

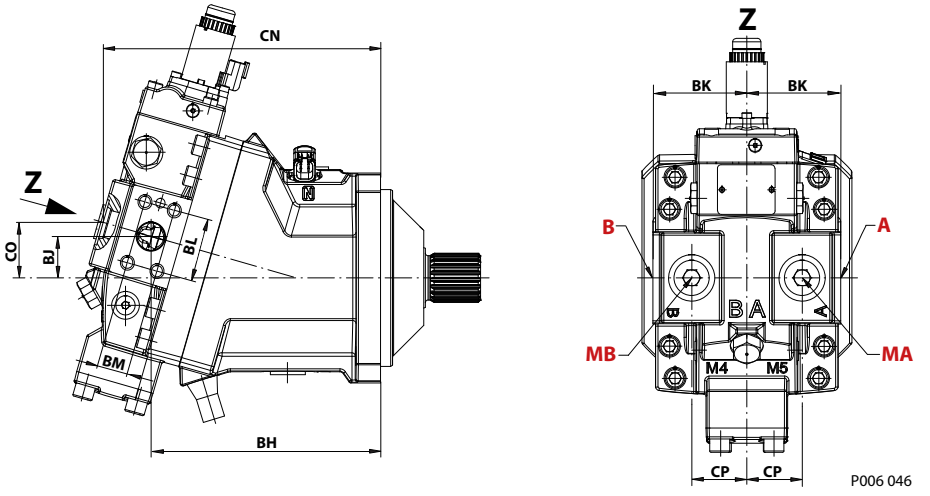

Flange and housing dimensions

Axial and radial ports dimensions, mm [in]

Measure	Size 060	Size 080	Size 110	Size 160	Size 210	Size 250
AA	240.5 [9.47]	259.2 [10.20]	278.5 [10.96]	307.8 [12.12]	331.9 [13.07]	339.3 [13.36]
AB	114.7 [4.52]	119.4 [4.70]	130.8 [5.15]	138.2 [5.44]	145.5 [5.73]	151.7 [5.97]
AC	224.2 [8.83]	235.7 [9.28]	247.2 [9.73]	265.0 [10.43]	279.4 [11]	290.1 [11.42]
BA	180.3 [7.10]	194.8 [7.67]	207.8 [8.18]	232.0 [9.13]	256.1 [10.08]	260.0 [10.24]
BB	32.3 [1.27]	34.7 [1.37]	37.5 [1.48]	42.0 [1.65]	46.4 [1.83]	48.1 [1.89]
BC	74.4 [2.93]	78.4 [3.09]	88.9 [3.50]	99.0 [3.93]	108.2 [4.26]	108.8 [4.28]
BF	196.0 [7.72]	212.7 [8.38]	230.9 [9.90]	257.3 [10.13]	280.1 [11.03]	286.7 [11.29]
BG	18.9 [0.74]	22.0 [0.87]	24.8 [0.98]	28.6 [1.13]	29.5 [1.16]	28.2 [1.11]
BH	180.3 [7.10]	194.8 [7.67]	207.8 [8.18]	232.0 [9.13]	256.1 [10.08]	260.0 [10.24]
BJ	32.3 [1.27]	34.7 [1.37]	37.5 [1.48]	42.0 [1.65]	46.4 [1.83]	48.1 [1.89]
BK	69.5 [2.74]	75.2 [2.96]	85.0 [3.35]	96.0 [3.78]	104.3 [4.11]	107.8 [4.24]
BL	50.8 [2.00]	57.2 [2.25]	57.2 [2.25]	66.6 [2.62]	66.6 [2.62]	66.6 [2.62]
BM	23.8 [0.94]	27.8 [1.09]	27.8 [1.09]	31.8 [1.25]	31.8 [1.25]	31.8 [1.25]
CA	219.2 [8.63]	234.7 [9.24]	250.1 [9.85]	275.0 [10.83]	295.9 [11.65]	202.6 [11.91]
CB	43.4 [1.71]	46.2 [1.82]	49.6 [1.95]	54.4 [2.14]	57.8 [2.28]	60.3 [2.37]
CC	48.0 [1.89]	50.0 [1.97]	50.0 [1.97]	60.0 [2.36]	65 [2.56]	65.0 [2.56]
CD	50.8 [2.0]	57.2 [2.25]	57.2 [2.25]	66.6 [2.62]	66.6 [2.62]	66.6 [2.62]
CE	23.8 [0.94]	27.8 [1.09]	27.8 [1.09]	31.8 [1.25]	31.8 [1.25]	31.8 [1.25]
CF	45.0 [1.77]	46.0 [1.81]	63.0 [2.48]	54.5 [2.15]	66.9 [2.63]	65.0 [2.56]
CG	85.8 [3.38]	90.0 [3.54]	96.0 [3.78]	102.2 [4.02]	108.5 [4.27]	112.2 [4.42]
CH	18.0 [0.71]	22.0 [0.87]	21.0 [0.83]	23.0 [0.91]	25.0 [0.98]	25.0 [0.98]
CJ	68.0 [2.68]	80.0 [3.15]	87.0 [3.43]	90.9 [3.58]	104.3 [4.11]	99.4 [3.91]
CK	70.0 [2.76]	75.0 [2.95]	83.0 [3.27]	96.5 [3.80]	103.5 [4.07]	107.5 [4.23]
CL	58.9 [2.32]	65.3 [2.57]	68.8 [2.71]	75.8 [2.98]	84.9 [3.34]	82.3 [3.24]
CM	89.3 [3.52]	93.7 [3.69]	97.2 [3.83]	105.6 [4.16]	111.2 [4.38]	118.0 [4.65]
CN	220.3 [8.67]	234.7 [9.24]	251.1 [9.89]	276.0 [10.87]	296.9 [11.69]	303.6 [11.95]
CO	43.7 [1.72]	46.2 [1.82]	49.9 [1.96]	54.6 [2.15]	58.1 [2.29]	60.6 [2.39]
CP	48.0 [1.89]	50.0 [1.97]	50.0 [1.97]	60.0 [2.36]	65.0 [2.56]	65.0 [2.56]
α	17°	17°	19°	17°	17°	17°

For further detailed information about DIN ports dimensions see the *DIN flange design ports per ISO 11 926-1* on page 110.

Legend:
1 Loop flushing relief valve
2 Loop flushing shuttle spool
3 Speed sensor
4 Minimum angle stop adjustment
5 *Connector:* DEUTSCH DT04-2P
6 Alternate position of case drain port

Flange and housing dimensions

DIN flange design – options T* D* and P* D* (two-position control, PCOR, electric BPD)

Axial ports

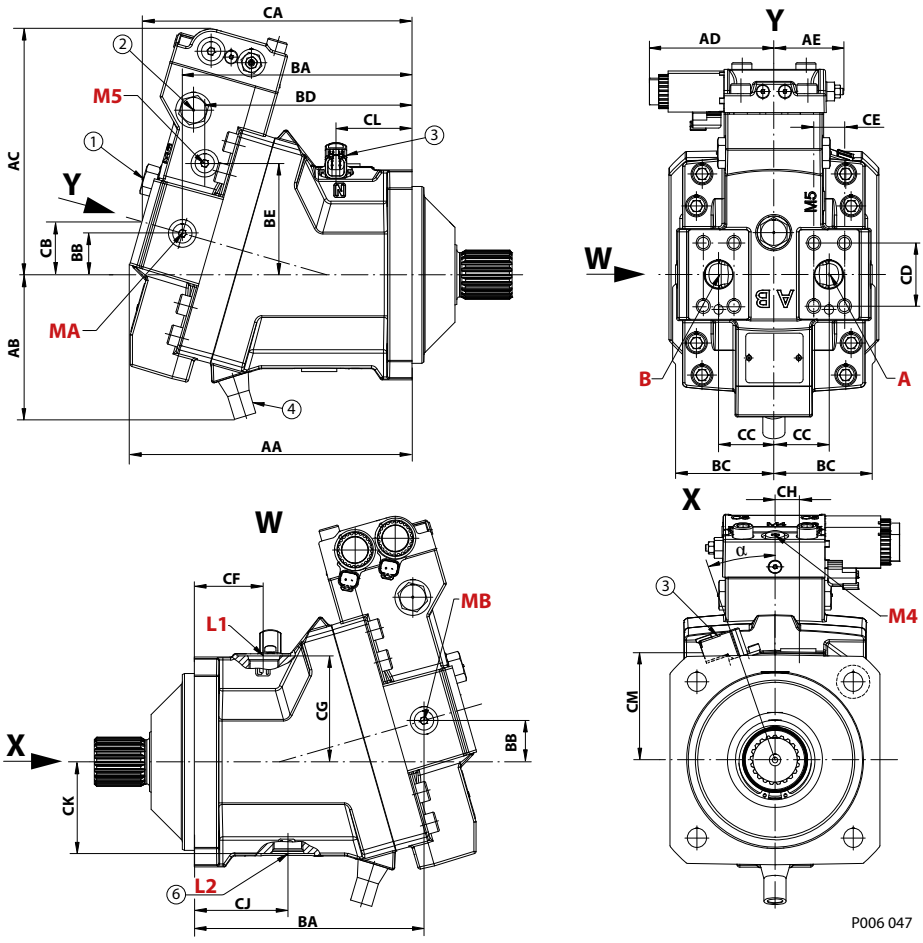

Radial ports

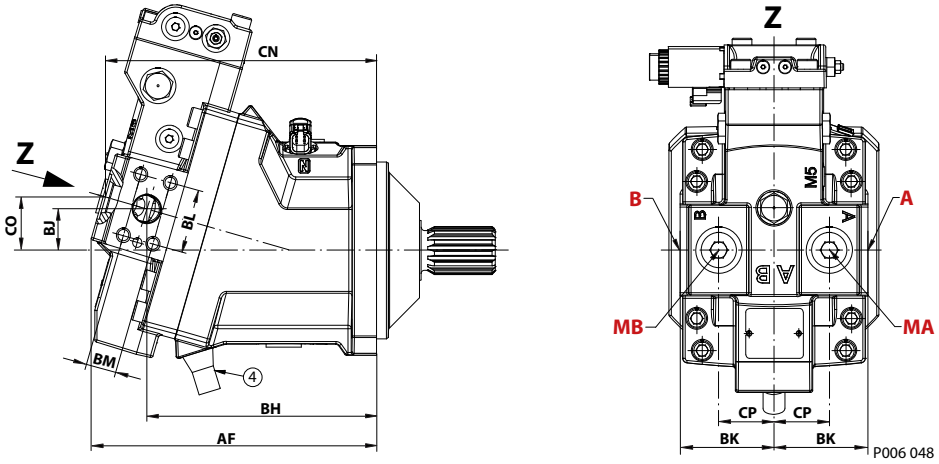

Flange and housing dimensions

Axial and radial ports dimensions, mm [in]

Callout	Size 060	Size 080	Size 110	Size 160	Size 210	Size 250
AA	219.1 [8.63]	237.4 [9.35]	255.5 [10.06]	283.0 [11.14]	308.9 [12.16]	316.9 [12.59]
AB	114.7 [4.52]	119.4 [4.70]	130.8 [5.15]	138.2 [5.44]	145.5 [5.73]	151.7 [5.97]
AB (MB0)	86.5 [3.41]	92.2 [3.63]	102.6 [4.04]	109.8 [4.32]	118 [4.65]	
AC	193.6 [7.62]	206.6 [8.13]	224.1 [8.82]	242.5 [9.55]	257.7 [10.15]	267.3 [10.52]
AD	112.7 [4.44]	112.7 [4.44]	112.7 [4.44]	112.7 [4.44]	112.7 [4.44]	112.7 [4.44]
AE	67.3 [2.65] max	67.3 [2.65] max	67.3 [2.65] max	67.3 [2.65] max	67.3 [2.65] max	67.3 [2.65] max
AF	220.8 [8.69]	239.5 [9.43]	257.9 [10.15]	283.0 [11.14]	308.9 [12.16]	316.9 [12.48]
BA	180.6 [7.11]	195.1 [7.68]	207.8 [8.18]	232.0 [9.13]	256.1 [10.08]	260.0 [10.24]
BB	32.3 [1.27]	34.7 [1.38]	37.5 [1.48]	42.0 [1.65]	46.4 [1.83]	48.1 [1.89]
BC	74.4 [2.93]	78.0 [3.07]	88.9 [3.50]	99.9 [3.93]	108.2 [4.26]	108.8 [4.28]
BD	165.3 [6.51]	174.0 [6.85]	187.5 [7.38]	212.1 [8.35]	236 [9.29]	238.7 [9.40]
BE	83.8 [3.30]	90.6 [3.54]	100.9 [3.97]	111.7 [4.40]	120.8 [4.76]	125.2 [4.93]
BH	180.6 [7.11]	194.8 [7.67]	207.8 [8.18]	232.0 [9.13]	256.1 [10.08]	260.0 [10.24]
BJ	32.3 [1.27]	34.7 [1.37]	37.5 [1.48]	42.0 [1.65]	46.4 [1.83]	48.1 [1.89]
BK	69.5 [2.74]	75.2 [2.96]	85.0 [3.35]	96.0 [3.78]	104.3 [4.11]	107.8 [4.24]
BL	50.8 [2.0]	57.2 [2.25]	57.2 [2.25]	66.6 [2.62]	66.6 [2.62]	66.6 [2.62]
BM	23.8 [0.94]	27.8 [1.09]	27.8 [1.09]	31.8 [1.25]	31.8 [1.25]	31.8 [1.25]
CA	209.3 [8.24]	226.2 [8.91]	244.3 [9.62	267.0 [10.51]	291.1 [11.46]	296.6 [11.68]
CB	40.6 [1.6]	43.7 [1.72]	48.0 [1.89]	52.1 [2.05]	56.1 [2.21]	58.5 [2.30]
CC	48.0 [1.89]	50.0 [1.97]	50.0 [1.97]	60.0 [2.36]	65 [2.56]	65.0 [2.56]
CD	50.8 [2.0]	57.2 [2.25]	57.2 [2.25]	66.6 [2.62]	66.6 [2.62]	66.6 [2.62]
CE	23.8 [0.94]	27.8 [1.09]	27.8 [1.09]	31.8 [1.25]	31.8 [1.25]	31.8 [1.25]
CF	45.0 [1.77]	46.0 [1.81]	63.0 [2.48]	54.5 [2.15]	66.9 [2.63]	65.0 [2.56]
CG	85.8 [3.38]	90.0 [3.54]	96.0 [3.78]	102.2 [4.02]	108.5 [4.27]	112.2 [4.42]
CH	18.0 [0.71]	22.0 [0.87]	21.0 [0.83]	23.0 [0.91]	25.0 [0.98]	25.0 [0.98]
CJ	68.0 [2.68]	80.0 [3.15]	87.0 [3.43]	90.9 [3.58]	104.3 [4.11]	99.4 [3.91]
CK	70.0 [2.76]	75.0 [2.95]	83.0 [3.27]	96.5 [3.8]	103.5 [4.07]	107.5 [4.23]
CL	58.9 [2.32]	65.3 [2.57]	68.8 [2.71]	75.8 [2.98]	84.9 [3.34]	82.3 [3.24]
CM	89.3 [3.52]	93.7 [3.69]	97.2 [3.83]	105.6 [4.16]	111.2 [4.38]	118.0 [4.65]
CN	209.6 [8.25]	226.6 [8.92]	245.3 [9.66]	267.9 [10.55]	291.8 [11.49]	297.5 [11.71]
CO	40.7 [1.60]	43.8 [1.72]	48.2 [1.90]	52.3 [2.06]	56.6 [2.23]	58.8 [2.31]
CP	48.0 [1.89]	50.0 [1.97]	50.0 [1.97]	60.0 [2.36]	65.0 [2.56]	65.0 [2.56]
α	17°	17°	19°	17°	17°	17°

For further detailed information about DIN ports dimensions see the *DIN flange design ports per ISO 11 926-1* on page 110.

Legend:
1 Loop flushing relief valve
2 Loop flushing shuttle spool
3 Speed sensor
4 Minimum angle stop adjustment
5 *Connector:* DEUTSCH DT04-2P
6 Alternate position of case drain port

Flange and housing dimensions

DIN flange design ports per ISO 11 926-1

Ports dimensions per ISO 11 926-1; mm [in]

Ports	Port config	Size 060	Size 080	Size 110	Size 160	Size 210	250
L1, L2 Case drain	Inch	$^{7}/_{8}$-14; Ø42 [1.65][1)]		1 $^{1}/_{16}$-12; Ø48.5 [1.91][1)]		1 $^{5}/_{16}$-12; Ø50.1 [1.97] [1)]	
	Metric	M22 x 2		M27 x 2		M33 x 2	
A, B Split flange boss system	Inch	DN 19 (Ø19 mm) [2)] M10x1.5; 18 [0.71]	DN 25 (Ø25 mm) [2)] M12x1.75; 23 [0.91]		DN 32 (Ø32 mm) [2)] M12x1.75; 23 [0.91]		
	Metric						
MA, MB (axial HP ports) System pressure A, B gauge[3)]	Inch	$^{9}/_{16}$–18; Ø25.0 [0.984] [1)]					
	Metric	M14 x 1.5					
MA, MB (radial HP ports) System pressure A, B gauge[3)]	Inch	$^{7}/_{8}$-14 Ø34.0 [1.34] [1)]	1 $^{1}/_{16}$-12; Ø42.0 [1.65] [1)]				
	Metric	M22 x 1.5	M27 x 2.0				
M4, M5 Servo pressure supply gauge	Inch	$^{9}/_{16}$–18; Ø25.0 [0.984] [1)]					
	Metric	M14 x 1.5					

[1)] Max. clearance DIA for fitting.

[2)] Typ 1, 40 MPa series per ISO 6162. Full thread depth.

[3)] Countersink may be deeper that specified in the standard.

For further detailed information about DIN dimensions see:

- *DIN flange design – option L* (proportional control)* on page 104
- *DIN flange design – option M* (proportional control)* on page 106
- *DIN flange design – options T* D* and P* D* (two-position control, PCOR, electric BPD)* on page 108

Flange and housing dimensions

DIN mounting flange design per ISO 3019/2

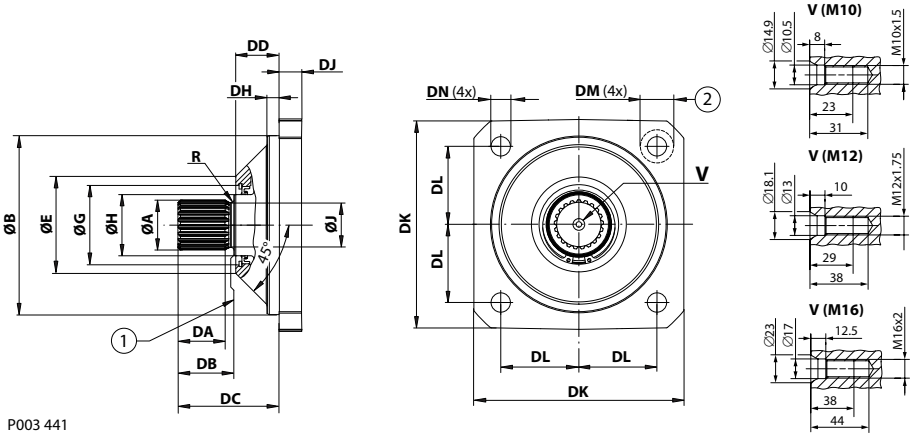

1. Coupling must not protrude beyond this surface
2. Maximum screw head space other side

DIN mounting flange per ISO 3019/2 dimensions, mm [in]

Code	Size 060 125 B4 HL	Size 080 140 B4 HL	Size 110 160 B4 HL	Size 160 180 B4 HL	Size 210 200 B4 HL	Size 250 200 B4 HL
ØB	125.0 [4.921]	140.0 [5.512]	160.0 [6.299]	180.0 [7.087]	200.0 [7.874]	200.0 [7.874]
ØE	72.0 [2.835]	76.6 [3.016]	85.9 [3.382]	98.8 [3.890]	102.0 [4.016]	111.4 [4.386]
ØG	62.0 [2.441]	62.0 [2.441]	72.0 [2.835]	72.0 [2.835]	72.0 [2.835]	72.0 [2.835]
DD	30.0 [1.181]	31.2 [1.228]	39.0 [1.535]	38.8 [1.528]	38.9 [1.531]	48.4 [1.91]
DH	11.2 [0.441]	11.1 [0.437]	10.8 [0.425]	10.1 [0.398]	11.0 [0.433]	11.0 [0.433]
DJ	17.0 [0.669]	19.0 [0.748]	22.2 [0.874]	22.0 [0.866]	25 [0.984]	25 [0.984]
DK	150.0 [5.905]	165.0 [6.496]	190.0 [7.840]	212.0 [8.346]	236.0 [9.291]	236.0 [9.291]
DL	56.6 [2.228]	63.7 [2.509]	70.7 [2.783]	79.2 [3.118]	88.4 [3.480]	88.4 [3.480]
DM	19.5 [0.768]	19.5 [0.768]	30.0 [1.181]	30.0 [1.181]	37.0 [1.457]	37.0 [1.457]
DN	13.5 [0.531]	13.5 [0.531]	17.5 [0.689]	17.5 [0.689]	22 [0.866]	22 [0.866]

Shaft options overview

Size	Shaft option (Number of teeth)				
	GN/GS (14T)	**HN/HS (16T)**	**JN/JS (18T)**	**KN/KS (21T)**	**LN/LS (24T)**
060	●	●	—	—	—
080		●	●	—	—
110	—	—	●	●	—
160	—	—	—	●	●
210	—	—	—	—	●

● = available option, – = not available option

Flange and housing dimensions

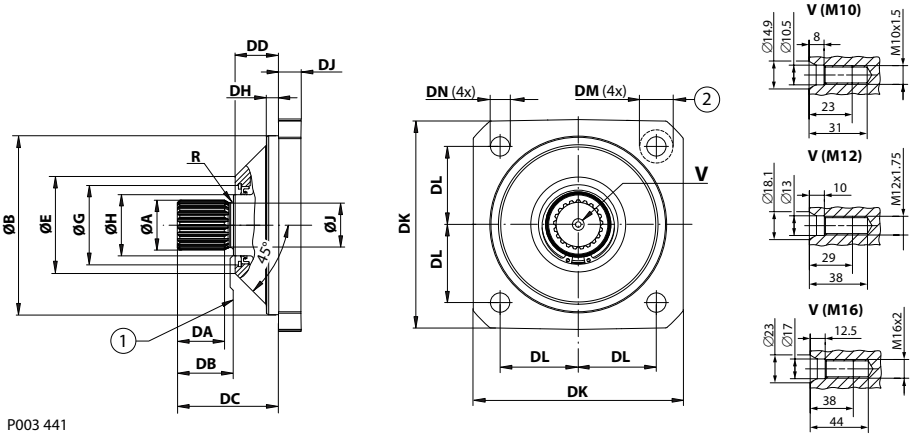

1. Coupling must not protrude beyong this surface
2. Maximum screw head space other side

Shaft dimensions, mm [in]

Shaft option **Teeth**	**GN/GS** **14**	**HN/HS** **16**	**JN/JS** **18**	**KN/KS** **21**	**LN/LS** **24**
Pitch Ø	28.0 [1.102]	32.0 [1.260]	36.0 [1.417]	42.0 [1.654]	48.0 [1.890]
Spline[1)]	W30x2x30x14x9g	W35x2x30x16x9g	W40x2x30x18x9g	W45x2x30x21x9g	W50x2x30x24x9g
ØA	29.6 [1.165]	34.6 [1.362]	39.6 [1.559]	44.6 [1.756]	49.6 [1.953]
ØH	44.5 [1.752]	44.5 [1.752]	44.5 [1.752] 55.0 [2.165][2)]	55.0 [2.165]	55.0 [2.165]
ØJ	25.0 [0.984]	30.0 [1.181]	35.0 [1.378]	40.0 [1.575]	45.0 [1.772]
DA	27.0 [1.063]	32.0 [1.260]	37.0 [1.457]	42.0 [1.654]	47.0 [1.850]
DB	35.0 [1.378]	40.0 [1.575]	45.0 [1.772]	50.0 [1.968]	55.0 [2.165]
DC	67.5 [2.657]	72.0 [2.835]	77.0 [3.031] 85.5 [3.366][2)]	90.3 [3.555] 90.5 [3.563][2)]	95.3 [3.752]
R	1.6 [0.063]	1.6 [0.063]	1.6 [0.063] 2.5 [0.098][2)]	2.5 [0.098]	1.6 [0.063]
V	M10	M10	M12	M16	M16
Angle	Pressure angle 30°				

[1)] Spline per DIN 5480; side fit.

[2)] For size **110** only.

For ANSI B92.1-1970 class 5 shaft used in combination with DIN flanges, please contact your local Danfoss Power Solutions representative.

Flange and housing dimensions

Cartridge flange design – option L* (proportional control)

Axial ports

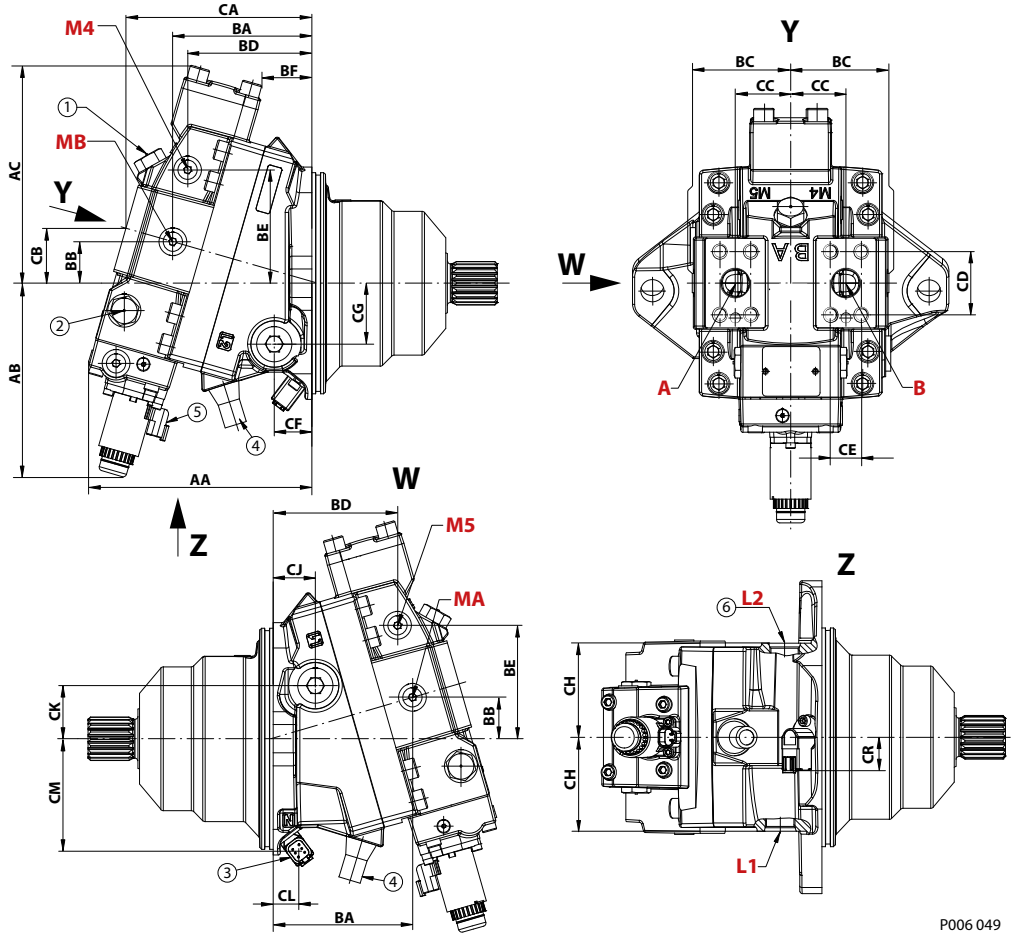

Radial ports

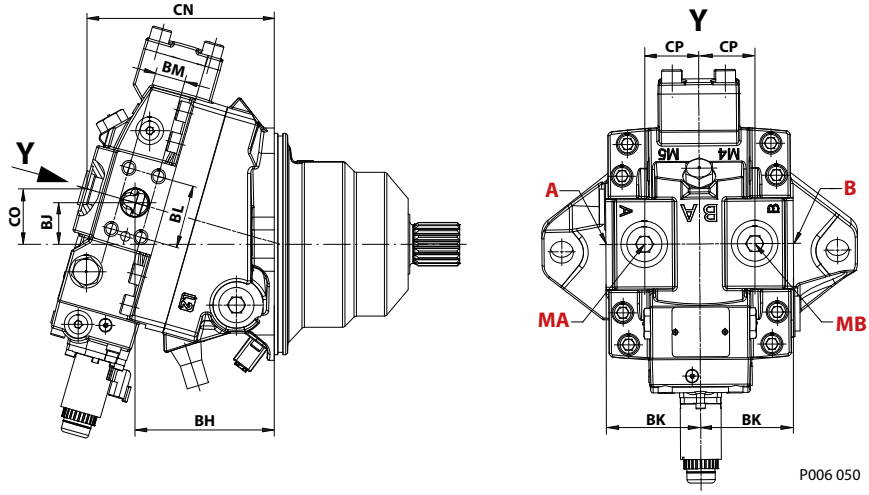

Flange and housing dimensions

Axial and radial ports dimensions, mm [in]

Measure	Size 060	Size 080	Size 110	Size 160
AA	188.1 [7.41]	187.5 [7.38]	201.9 [7.95]	229.3 [9.03]
AB	164.7 [6.48]	170.6 [6.72]	175.0 [6.89]	183.8 [7.24]
AC	167.5 [6.59]	179.9 [7.08]	196.9 [7.75]	219.7 [8.65]
BA	120.6 [4.75]	116.4 [4.58]	125.8 [4.95]	149.6 [5.89]
BB	32.3 [1.27]	34.7 [1.37]	37.5 [1.49]	42.0 [1.65]
BC	74.4 [2.93]	78.4 [3.09]	88.9 [3.50]	99.9 [3.93]
BD	106.8 [4.20]	101.5 [4.00]	112.4 [4.43]	133.6 [5.26]
BE	84.0 [3.30]	92.4 [3.64]	102.5 [4.04]	115.4 [4.54]
BF	43.0 [1.69]	37.0 [1.46]	46.0 [1.81]	64.0 [2.52]
BH	120.6 [4.75]	116.4 [4.58]	125.8 [4.95]	149.6 [5.89]
BJ	32.3 [1.27]	34.7 [1.37]	37.5 [1.48]	42.0 [1.65]
BK	69.5 [2.74]	75.2 [2.96]	85.0 [3.35]	96.0 [3.78]
BL	50.8 [2.00]	57.2 [2.25]	57.2 [2.25]	66.6 [2.62]
BM	23.8 [0.94]	27.8 [1.09]	27.8 [1.09]	31.8 [1.25]
CA	159.5 [6.28]	156.3 [6.15]	168.1 [6.62]	192.6 [7.58]
CB	43.4 [1.71]	46.2 [1.82]	49.6 [1.95]	54.4 [2.14]
CC	48.0 [1.89]	50.0 [1.97]	50.0 [1.97]	60.0 [2.36]
CD	50.8 [2.00]	57.2 [2.25]	57.2 [2.25]	66.6 [2.62]
CE	23.8 [0.94]	27.8 [1.09]	27.8 [1.09]	31.8 [1.25]
CF	32.2 [1.27]	31.0 [1.22]	34.1 [1.34]	51.8 [2.04]
CG	44.0 [1.73]	56.8 [2.24]	55.0 [2.17]	50.0 [1.97]
CH	75.0 [2.95]	78.0 [3.07]	86.0 [3.39]	97.0 [3.82]
CJ	44.2 [1.74]	36.0 [1.42]	38.1 [1.50]	52.8 [2.09]
CK	35.0 [1.38]	46.0 [1.81]	47.9 [1.89]	51.0 [2.01]
CL	26.1 [1.03]	21.5 [0.85]	22.9 [0.90]	25.1 [0.99]
CM	74.8 [2.94]	74.4 [2.93]	79.0 [3.11]	87.7 [3.45]
CN	160.6 [6.32]	156.3 [6.15]	169.1 [6.66]	193.6 [7.62]
CO	43.7 [1.72]	46.2 [1.82]	49.9 [1.96]	54.6 [2.15]
CP	48.0 [1.89]	50.0 [1.97]	50.0 [1.97]	60.0 [2.36]
CR	68.4 [2.69]	68.2 [2.69]	70.4 [2.77]	74.4 [2.93]
α	25°			

For further detailed information about Cartridge ports dimensions see the *Cartridge flange design ports per ISO 11 926-1* on page 119.

Legend:
1 Loop flushing relief valve
2 Loop flushing shuttle spool
3 Speed sensor
4 Minimum angle stop adjustment
5 *Connector:* DEUTSCH DT04-2P
6 Alternate position of case drain port

Flange and housing dimensions

Cartridge flange design – option M* (proportional control)

Axial ports

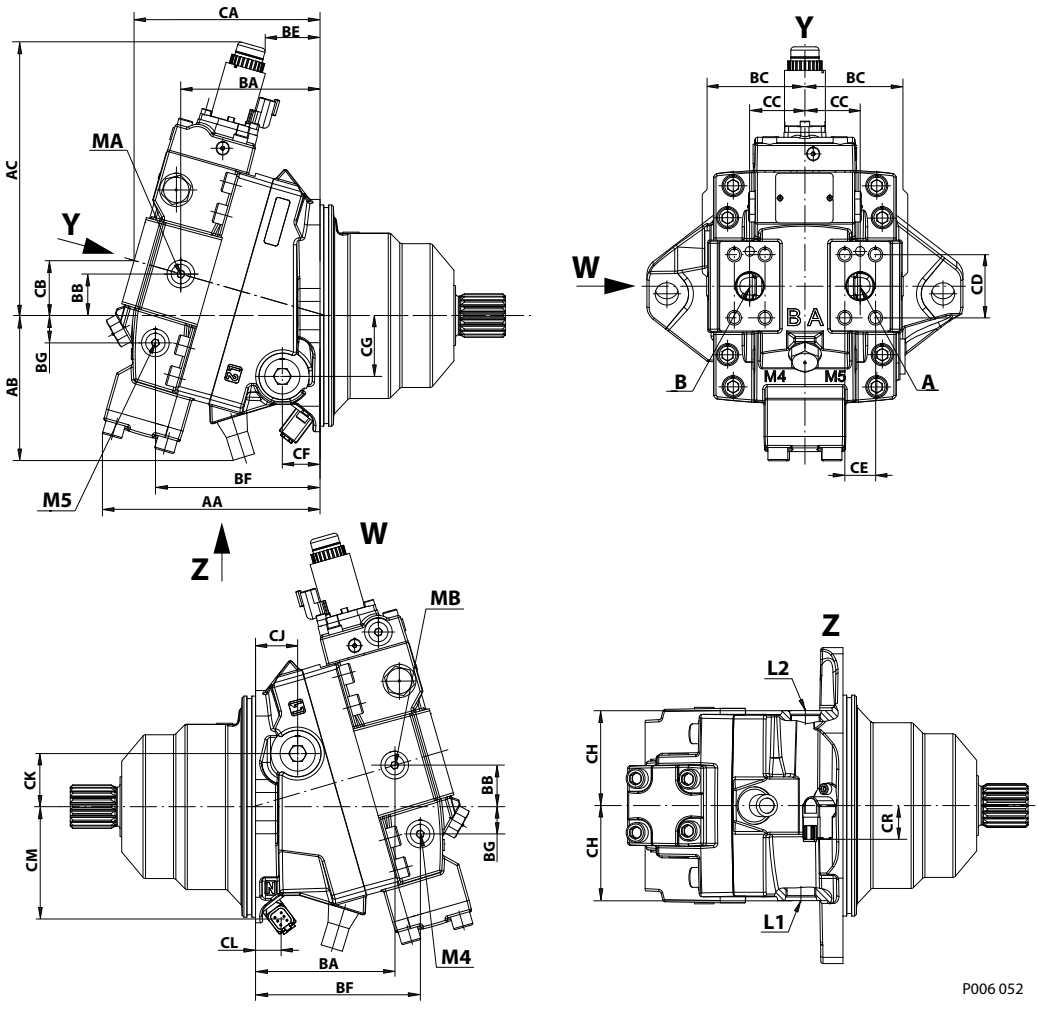

P006 052

Radial ports

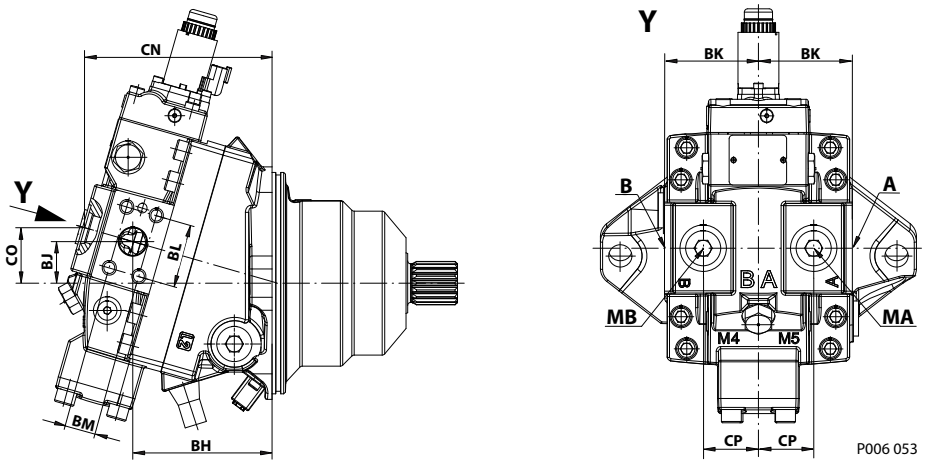

P006 053

Flange and housing dimensions

Axial and radial ports dimensions, mm [in]

Measure	Size 060	Size 080	Size 110	Size 160
AA	180.8 [7.12]	180.8 [7.12]	196.5 [7.74]	225.4 [8.87]
AB	114.7 [4.52]	119.4 [4.70]	130.8 [5.15]	138.2 [5.44]
AC	224.2 [8.83]	235.7 [9.28]	247.2 [9.73]	265.0 [10.43]
BA	120.6 [4.75]	116.4 [4.58]	125.8 [4.95]	149.6 [5.89]
BB	32.3 [1.27]	34.7 [1.37]	37.5 [1.48]	42.0 [1.65]
BC	74.4 [2.93]	78.4 [3.09]	88.9 [3.50]	99.9 [3.93]
BE	32.0 [1.26]	27.0 [1.06]	36.0 [1.42]	56.0 [2.20]
BF	136.3 [5.37]	134.3 [5.29]	148.9 [5.86]	174.9 [6.89]
BG	18.9 [0.74]	22.0 [0.87]	24.8 [0.98]	28.6 [1.13]
BH	126.6 [4.75]	116.4 [4.58]	125.8 [4.95]	149.6 [5.89]
BJ	32.3 [1.27]	34.7 [1.37]	37.5 [1.48]	42.0 [1.65]
BK	69.5 [2.74]	75.2 [2.96]	85.0 [3.35]	96.0 [3.78]
BL	50.8 [2.00]	57.2 [2.25]	57.2 [2.25]	66.6 [2.62]
BM	23.8 [0.94]	27.8 [1.09]	27.8 [1.09]	31.8 [1.25]
CA	159.9 [6.30]	156.3 [6.15]	168.1 [6.62]	192.6 [7.58]
CB	43.3 [1.71]	46.2 [1.82]	49.6 [1.95]	54.4 [2.14]
CC	48.0 [1.89]	50.0 [1.97]	50.0 [1.97]	60.0 [2.36]
CD	50.8 [2.00]	57.2 [2.25]	57.2 [2.25]	66.6 [2.62]
CE	23.8 [0.94]	27.8 [1.09]	27.8 [1.09]	31.8 [1.25]
CF	32.2 [1.27]	31.0 [1.22]	34.1 [1.34]	51.8 [2.04]
CG	44.0 [1.73]	56.8 [2.24]	55.0 [2.17]	50.0 [1.97]
CH	75.0 [2.95]	78.0 [3.07]	86.0 [3.39]	97.0 [3.82]
CJ	44.2 [1.74]	36.0 [1.42]	38.1 [1.50]	52.8 [2.09]
CK	35.0 [1.38]	46.0 [1.81]	47.9 [1.89]	51.0 [2.01]
CL	26.1 [1.03]	21.5 [0.85]	22.9 [0.90]	25.1 [0.99]
CM	74.8 [2.94]	74.4 [2.93]	79.0 [3.11]	87.7 [3.45]
CN	160.6 [6.32]	156.3 [6.15]	169.1 [6.66]	193.6 [7.62]
CO	43.7 [1.72]	46.2 [1.82]	49.9 [1.96]	54.6 [2.15]
CP	48.0 [1.89]	50.0 [1.97]	50.0 [1.97]	60.0 [2.36]
CR	68.4 [2.69]	68.2 [2.69]	70.4 [2.77]	30.0 [1.18]
α	25°			

For further detailed information about Cartridge ports dimensions see the *Cartridge flange design ports per ISO 11 926-1* on page 119.

Legend:
1 Loop flushing relief valve
2 Loop flushing shuttle spool
3 Speed sensor
4 Minimum angle stop adjustment
5 *Connector:* DEUTSCH DT04-2P
6 Alternate position of case drain port

Flange and housing dimensions

Cartridge flange design – options T* D* and P* D* (two-position control, PCOR, electric BPD)

Axial ports

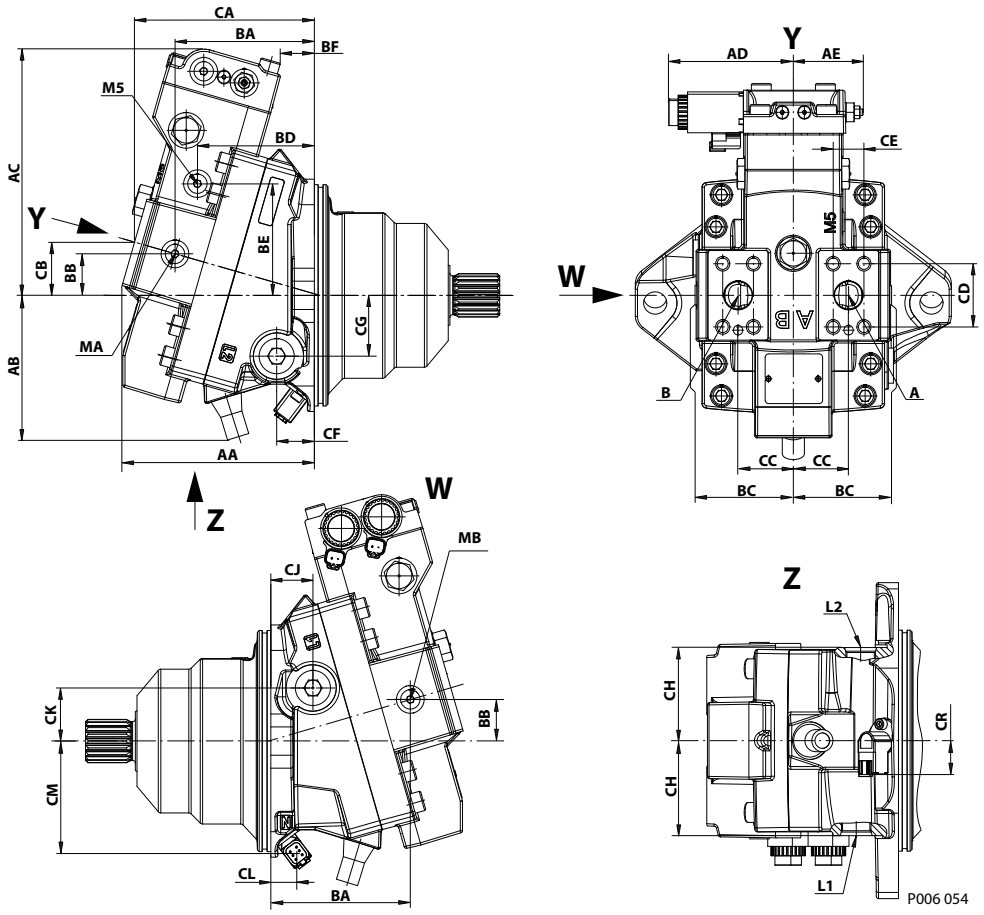

Radial ports

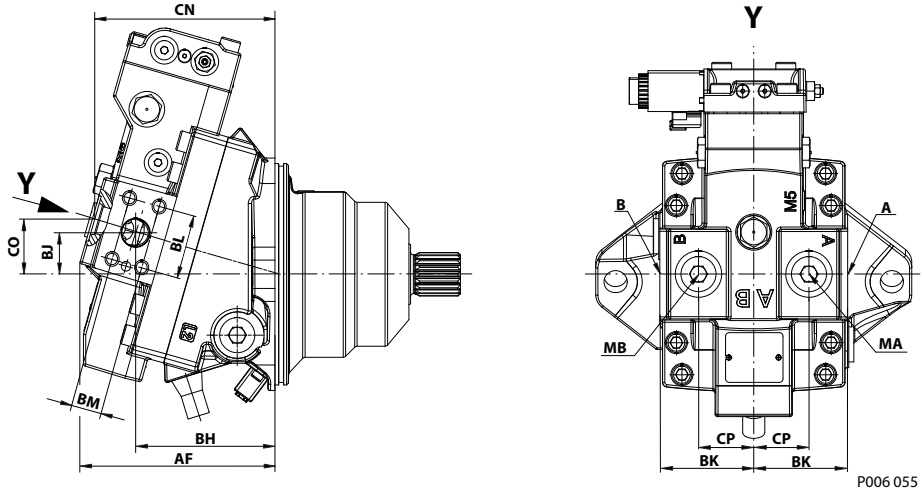

Flange and housing dimensions

Axial and radial ports dimensions, mm [in]

Callout	Size 060	Size 080	Size 110	Size 160
AA	158.9 [6.26]	159.0 [6.26]	173.5 [6.83]	200.6 [7.90]
AB	114.7 [4.52]	119.4 [4.70]	130.8 [5.15]	138.2 [5.44]
AB (MB0)	100.6 [3.96]	100.1 [3.94]	104.6 [4.12]	113.4 [4.46]
AC	193.6 [7.62]	206.6 [8.13]	224.1 [8.82]	242.5 [9.55]
AD	112.7 [4.44]	112.7 [4.44]	112.7 [4.44]	112.7 [4.44]
AE	67.3 [2.65] max	67.3 [2.65] max	67.3 [2.65] max	67.3 [2.65] max
AF	161.1 [6.34]	161.1 [6.34]	175.9 [6.93]	200.6 [7.90]
BA	120.9 [4.76]	116.7 [4.59]	125.8 [4.95]	149.6 [5.89]
BB	32.3 [1.27]	34.7 [1.38]	37.5 [1.48]	42.0 [1.65]
BC	74.4 [2.93]	78.4 [3.09]	88.9 [3.50]	99.9 [3.93]
BD	105.6 [4.16]	95.6 [3.76]	105.5 [4.15]	129.7 [5.11]
BE	83.8 [3.30]	90.6 [3.54]	100.9 [3.97]	111.7 [4.40]
BF	29.0 [1.14]	20.0 [0.79]	31.0 [1.22]	50.0 [1.97]
BH	120.9 [4.76]	116.4 [4.58]	125.8 [4.95]	149.6 [5.89]
BJ	32.3 [1.27]	34.7 [1.37]	37.5 [1.48]	42.0 [1.65]
BK	69.5 [2.74]	75.2 [2.96]	85.0 [3.35]	96.0 [3.78]
BL	50.8 [2.0]	57.2 [2.25]	57.2 [2.25]	66.6 [2.62]
BM	23.8 [0.94]	27.8 [1.09]	27.8 [1.09]	31.8 [1.25]
CA	149.6 [5.89]	147.8 [5.82]	162.3 [6.39]	184.6 [7.27]
CB	40.6 [1.6]	43.7 [1.72]	48.0 [1.89]	52.1 [2.05]
CC	48.0 [1.89]	50.0 [1.97]	50.0 [1.97]	60.0 [2.36]
CD	50.8 [2.0]	57.2 [2.25]	57.2 [2.25]	66.6 [2.62]
CE	23.8 [0.94]	27.8 [1.09]	27.8 [1.09]	31.8 [1.25]
CF	32.2 [1.27]	31.0 [1.22]	34.1 [1.34]	51.8 [2.04]
CG	44.0 [1.73]	56.8 [2.24]	55.0 [2.17]	50.0 [1.97]
CH	75.0 [2.95]	78.0 [3.07]	86.0 [3.39]	97.0 [3.82]
CJ	44.2 [1.74]	36.0 [1.42]	38.1 [1.50]	52.8 [2.09]
CK	35.0 [1.38]	46.0 [1.81]	47.9 [1.89]	51.0 [2.01]
CL	26.1 [1.03]	21.5 [0.85]	22.9 [0.9]	25.1 [0.99]
CM	74.8 [2.94]	74.4 [2.93]	79.0 [3.11]	87.7 [3.45]
CN	149.9 [5.9]	148.2 [5.83]	163.3 [6.43]	184.6 [7.27]
CO	40.7 [1.60]	43.8 [1.72	48.2 [1.90]	52.3 [2.06]
CP	48.0 [1.89]	50.0 [1.97]	50.0 [1.97]	60.0 [2.36]
CR	68.4 [2.69]	68.2 [2.69]	70.4 [2.77]	30.0 [1.18]
α	25°			

Legend:
1 Loop flushing relief valve
2 Loop flushing shuttle spool
3 Speed sensor
4 Minimum angle stop adjustment
5 *Connector:* DEUTSCH DT04-2P
6 Alternate position of case drain port

Flange and housing dimensions

Cartridge flange design ports per ISO 11 926-1

Ports dimensions per ISO 11 926-1; mm [in]

Ports	Port config	Size 060	Size 080	Size 110	Size 160
L1, L2 Case drain	Inch	$^{7}/_{8}$-14; Ø42 [1.65] [1)]		1 $^{1}/_{16}$-12; Ø48.5 [1.91] [1)]	
	Metric	M22 x 1.5		M27 x 2.0	
A, B Split flange boss system	Inch	DN 19 (Ø19 mm) [2)] M10x1.5; 18 [0.71]	DN 25 (Ø25 mm) [2)] M12x1.75; 23 [0.91]		DN 32 (Ø32 mm) [2)] M12x1.75; 23 [0.91]
	Metric				
MA, MB (axial HP ports) System pressure A, B gauge[3)]	Inch	$^{9}/_{16}$–18; Ø25.0 [0.984] [1)]			
	Metric	M14 x 1.5			
MA, MB (radial HP ports) System pressure A, B gauge[3)]	Inch	$^{7}/_{8}$-14; Ø34.0 [1.34] [1)]	$^{9}/_{16}$–18; Ø25.0 [0.984] [1)]		
	Metric	M22 x 1.5	M27 x 2.0		
M4, M5 Servo pressure supply gauge	Inch	$^{9}/_{16}$–18; Ø25.0 [0.984] [1)]			
	Metric	M14 x 1.5			

[1)] Max. clearance DIA for fitting.

[2)] Typ 1, 40 MPa series per ISO 6162. Full thread depth.

[3)] Countersink may be deeper that specified in the standard.

For further detailed information about Cartridge dimensions see:

- *Cartridge flange design – option L* (proportional control)* on page 113
- *Cartridge flange design – option M* (proportional control)* on page 115
- *Cartridge flange design – options T* D* and P* D* (two-position control, PCOR, electric BPD)* on page 117

Flange and housing dimensions

Cartridge mounting flange design

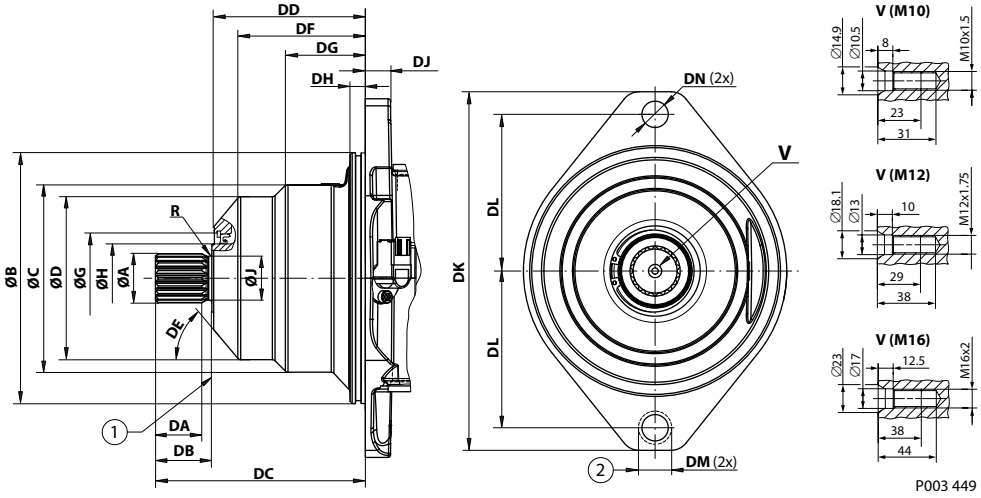

1. Coupling must not protrude beyong this surface
2. Maximum screw head space other side

Cartridge flange dimensions, mm [in]

Measure	Size 060	Size 080	Size 110	Size 160
ØB	160 [6.299]	190 [7.480]	200 [7.874]	200.0 [7.874]
ØC	121.0 [4.764]	134.0 [5.276]	150.0 [5.905]	170.0 [6.693]
ØD	104.0 [4.094]	116.0 [4.567]	130.0 [5.118]	146.0 [5.748]
ØG	62.0 [2.441]	62.0 [2.441]	72.0 [2.835]	72.0 [2.835]
DE	53°	54°	40°	45°
DD	90.4 [3.559]	109.2 [4.299]	121.0 [4.764]	121.0 [4.772]
DF	71.1 [2.799]	80.9 [3.185]	101.8 [4.008]	98.0 [3.858]
DG	40.7 [1.602]	56.6 [2.228]	63.8 [2.512]	61.5 [2.423]
DH	12.6 [0.496]	11.2 [0.441]	11.2 [0.441]	11.2 [0.441]
DJ	16.2 [0.638]	18.0 [0.709]	20.1 [0.791]	20.0 [0.787]
DK	235.0 [9.252]	260.0 [10.236]	286.0 [11.260]	286.0 [11.260]
DL	100.0 [3.937]	112.0 [4.409]	125.0 [4.921]	125.0 [4.921]
DM	30.0 [1.181]	30.0 [1.181]	30.0 [1.181]	30.0 [1.181]
DN	17.0 [0.669]	21.0 [0.827]	21.0 [0.827]	21.0 [0.827]
O-Ring*	3.0 x 150.0 [0.12 x 5.91]	3.0 x 179.0 [0.12 x 7.047]	3.0 x 192.0 [0.12 x 7.559]	3.0 x 192.0 [0.12 x 7.559]
Material Nr.	**726927**	**502205**	**502206**	**502206**

* O-Ring is not part of the shipment.

Motor installations will vary by application. It is the customer's responsibility to evaluate each application for proper mounting and sealing.

Flange and housing dimensions

Frame size 060 and 080 shaft options

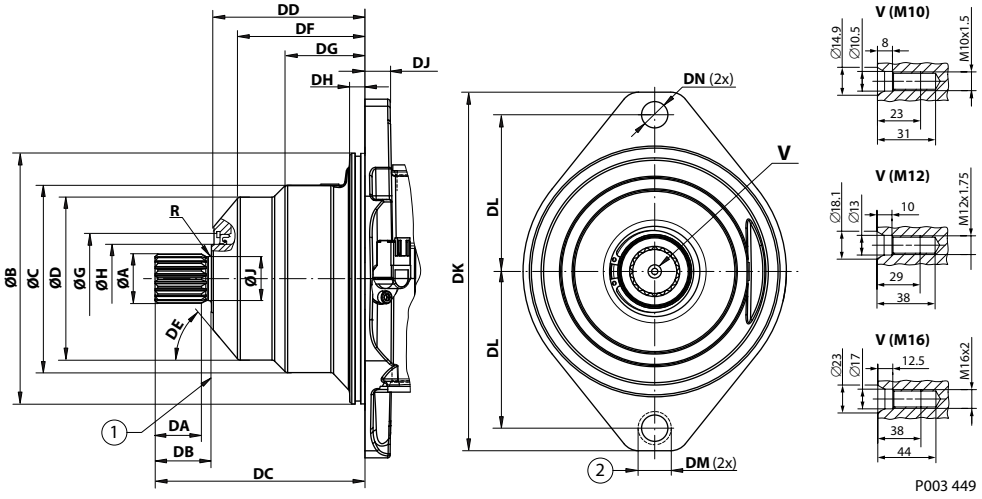

1. Coupling must not protrude beyong this surface
2. Maximum screw head space other side

Shaft dimensions for frame sizes 060 and 080, mm [in]

Option	AN/AS	BN/BS	CN/CS	GN/GS	HN/HS	JN/JS
Teeth	**14**	**21**	**23**	**14**	**16**	**18**
Pitch-Ø	29.633 [1.167]	33.337 [1.312]	36.513 [1.438]	28.0 [1.102]	32.0 [1.260]	36.0 [1.417]
Spline*	ANSI B92.1-1970 Class 5 flat root side fit			W30x2x30x14x9g	W35x2x30x16x9g	W40x2x30x18x9g
A	34.4 [1.315]	34.4 [1.315]	37.6 [1.48]	29.6 [1.165]	34.6 [1.362]	39.6 [1.559]
ØH	44.5 [1.752]	44.5 [1.752]	44.5 [1.752]	44.5 [1.752]	44.5 [1.752]	44.5 [1.752]
ØJ	25.8 [1.016]	30.0 [1.181]	32.0 [1.260]	25.0 [0.984]	30.0 [1.181]	35.0 [1.378]
DA	37.5 [1.476]	37.5 [1.476]	37.5 [1.476]	27.0 [1.063]	32.0 [1.260]	37.0 [1.457]
DB	47.5 [1.87]	47.5 [1.87]	47.5 [1.87]	35.0 [1.378]	40.0 [1.575]	45.0 [1.772]
DC (060)	139.7 [5.500]	139.7 [5.500]	—	127.2 [5.008]	132.2 [5.205]	—
DC (080)	157.9 [6.217]	157.9 [6.217]	157.9 [6.217]	—	150.4 [5.921]	155.4 [6.118]
R	3.0 [0.118]	3.0 [0.118]	3.0 [0.118]	1.6 [0.063]	1.6 [0.063]	1.6 [0.063]
V	M10	M10	M12	M10	M10	M12
Angle	Pressure angle 30°					

* Spline per DIN 5480, side fit.

Shaft options overview for frame sizes 060 and 080

Size	Shaft option					
	AN/AS	**BN/BS**	**CN/CS**	**GN/GS**	**HN/HS**	**JN/JS**
060	●	●	—	●	●	—
080	●	●	●	—	●	●

● = available option; — = not available option

Flange and housing dimensions

Frame size 110 and 160 shaft options

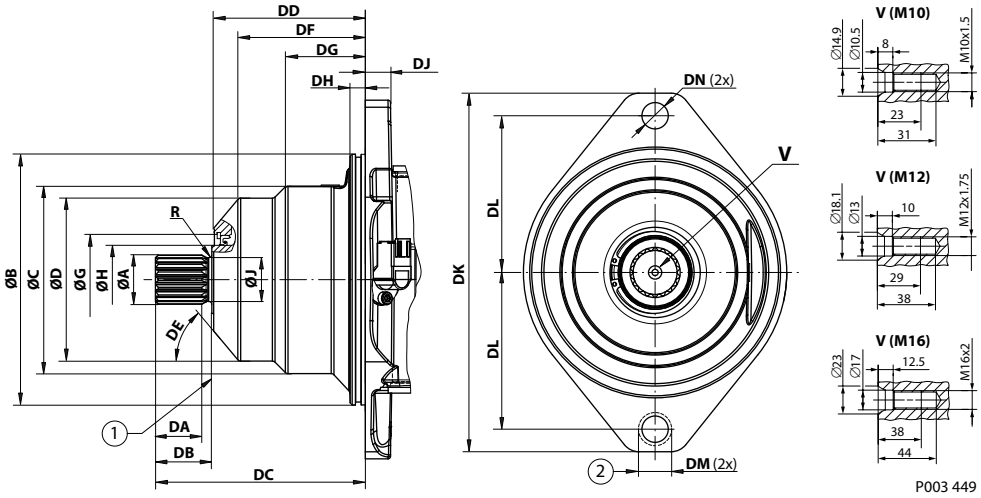

1. Coupling must not protrude beyong this surface
2. Maximum screw head space other side

Shaft dimensions for frame sizes 110 and 160, mm [in]

Option	DN/DS	EN/ES	FN/FS	JN/JS	KN/KS	LN/LS
Teeth	**27**	**13**	**15**	**18**	**21**	**24**
Pitch-Ø	42.862 [1.687]	41.275 [1.625]	47.625 [1.875]	36.0 [1.417]	42.0 [1.654]	48.0 [1.890]
Spline*	ANSI B92.1-1970 Class 5 flat root side fit			W40x2x30x18x9g	W45x2x30x21x9g	W50x2x30x24x9g
ØA	44.0 [1.732]	43.6 [1.717]	50.0 [1.968]	39.6 [1.559]	44.6 [1.756]	49.6 [1.953]
ØH	55.0 [2.165]	55.0 [2.165]	55.0 [2.165]	55.0 [2.165]	55.0 [2.165]	55.0 [2.165]
ØJ	39.6 [1.559]	36.0 [1.417]	42.2 [1.661]	35.0 [1.378]	40.0 [1.575]	45.0 [1.772]
DA	55.0 [2.165]	55.0 [2.165]	55.0 [2.165]	37.0 [1.457]	42.0 [1.654]	47.0 [1.850]
DB	67.0 [2.638]	67.0 [2.638]	67.0 [2.638]	45.0 [1.772]	50.0 [1.968]	55.0 [2.165]
DC	189.5 [7.461]	189.5 [7.461]	189.5 [7.461]	167.5 [6.594]	172.7 [6.799]	177.7 [6.996]
R	3.0 [0.118]	3.0 [0.118]	3.0 [0.118]	2.5 [0.098]	2.5 [0.098]	2.5 [0.098]
V	M16	M12	M16	M12	M16	M16
Angle	Pressure angle 30°					

* Spline per DIN 5480, side fit.

Shaft options overview for frame sizes 110 and 160

Size	Shaft option					
	DN/DS	EN/ES	FN/FS	JN/JS	KN/KS	LN/LS
110	●	●	—	●	●	—
160	●	●	●	—	●	●

● = available option; — = not available option

Flange and housing dimensions

H1B cartridge motors with speed sensor

To eliminate potential interference of the speed sensor and some gearbox parking brakeports, we have made/will make a slight modification to the speed sensor location. The speed sensor location is rotated by 25° to eliminate the potential interference.

Old speed sensor location: 0°

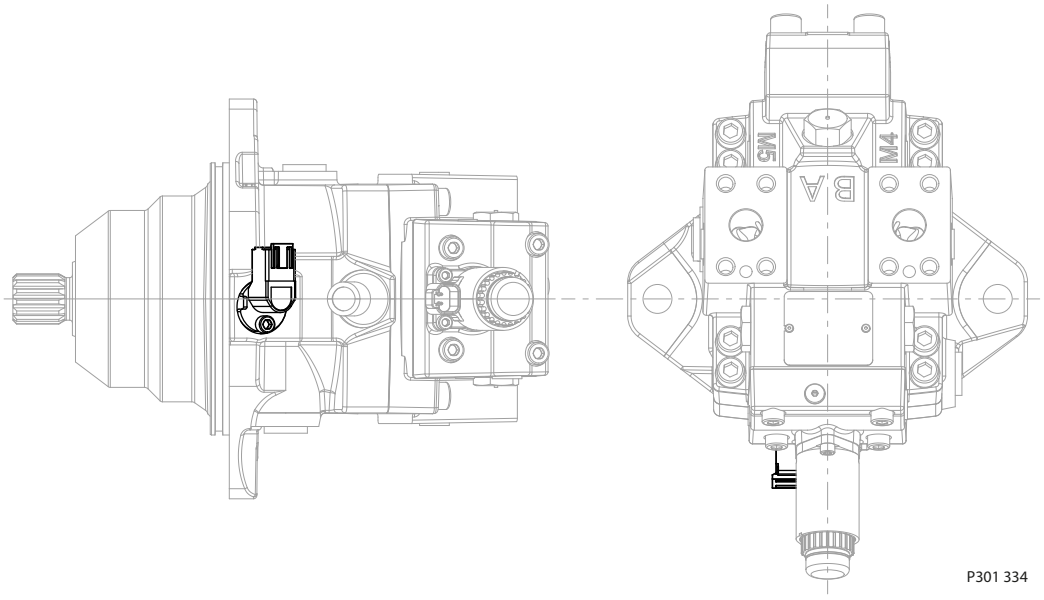

P301 334

New speed sensor location: rotated by 25°

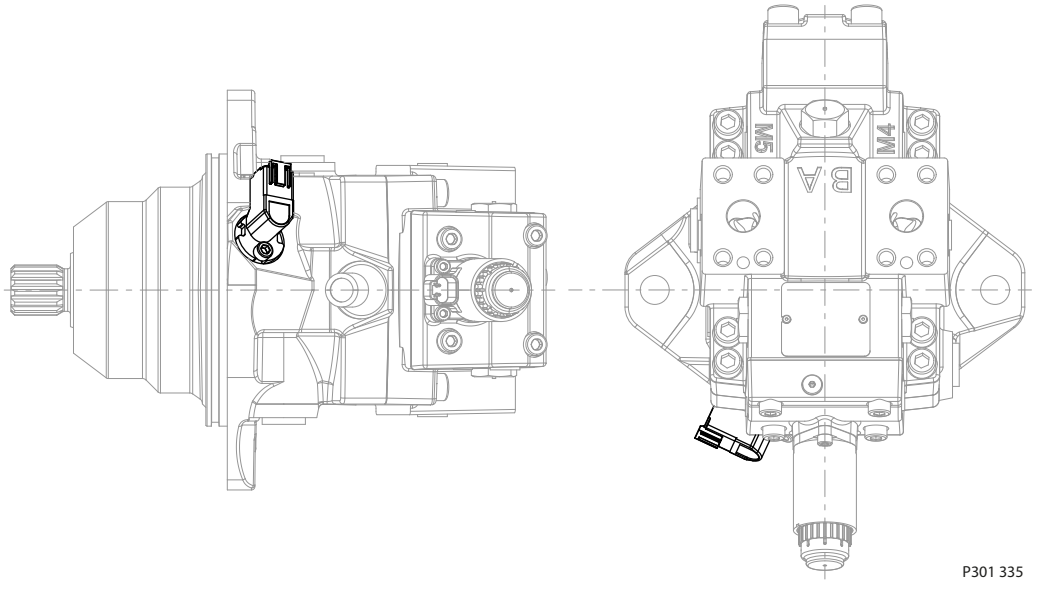

P301 335

Introduction date of H1B cartridge motor with speed sensor rotated by 25°:

- Size 060 – May 15, 2011
- Size 080 – August 1, 2011
- Size 110 – June 1, 2011
- Size 160 – March 30, 2011

Control dimensions

Options L1BA and L2BA (Electric proportional control)

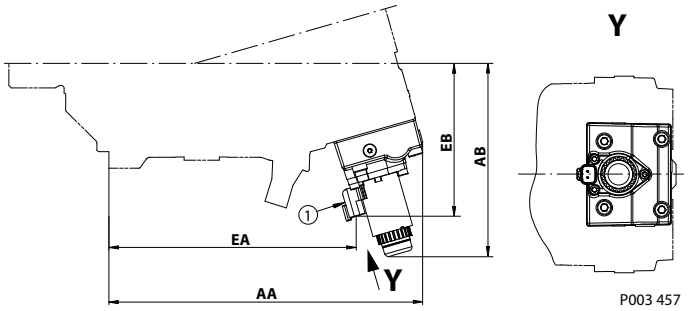

1. *Connector:* DEUTSCH DT04-2P

SAE mounting flange per ISO 3019/1 dimensions (mm [in])

	Size 060 SAE 127-4	Size 080 SAE 127-4	Size 110 SAE 152-4	Size 160 SAE 152-4	Size 210 SAE 165-4	Size 250 SAE 165-4
AA	272.3 [10.72]	289.9 [11.41]	316.4 [12.46]	343.8 [13.53]	368.4 [14.5]	387.0 [15.24]
AB	164.7 [6.48]	170.6 [6.72]	175.0 [6.89]	183.8 [7.24]	190.9 [7.52]	197.0 [7.76]
EA	212.2 [8.35]	229.8 [9.05]	256.3 [10.09]	283.5 [11.16]	309.2 [12.17]	327.0 [12.87]
EB	128.1 [5.04]	134.0 [5.28]	138.4 [5.45]	147.1 [5.79]	153.9 [6.06]	160.0 [6.30]

DIN B4 HL mounting flange per ISO 3019/2 dimensions, (mm [in])

	Size 060 – DIN 125	Size 080 – DIN 140	Size 110 – DIN 160	Size 160 – DIN 180	Size 210 – DIN 200
AA	247.8 [9.76]	265.9 [10.47]	283.9 [11.18]	311.7 [12.27]	336.6 [13.25]
AB	164.7 [6.48]	170.6 [6.72]	175.0 [6.89]	183.8 [7.24]	190.9 [7.52]
EA	187.7 [7.39]	205.8 [8.10]	223.8 [8.81]	251.6 [9.91]	277.2 [10.91]
EB	128.1 [5.04]	134.0 [5.28]	138.4 [5.45]	147.1 [5.79]	153.9 [6.06]

Size 250 is not available.

Cartridge mounting flange dimensions (mm [in])

	Size 060 Cartridge 160	Size 080 Cartridge 190	Size 110 Cartridge 200	Size 160 Cartridge 200
AA	188.1 [7.41]	187.5 [7.38]	201.9 [7.95]	229.3 [9.03]
AB	164.7 [6.48]	170.6 [6.72]	175.0 [6.89]	183.8 [7.24]
EA	128.0 [5.04]	127.4 [5.02]	141.8 [5.58]	169.2 [6.66]
EB	128.1 [5.04]	134.0 [5.28]	138.4 [5.45]	147.1 [5.79]

Size 210 and 250 are not available.

Control dimensions

Option D*MA (Electric proportional control)

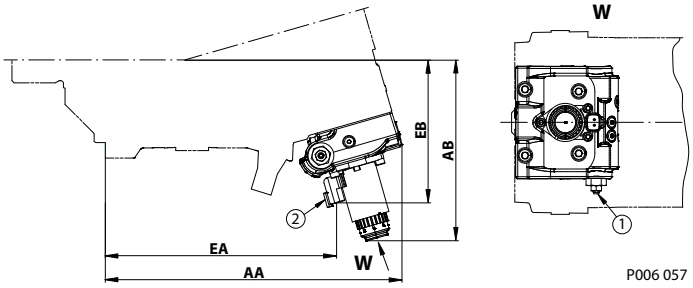

1. PCOR adjustment
2. *Connector:* DEUTSCH DT04-2P

SAE mounting flange per ISO 3019/1 dimensions (mm [in])

	Size 060 SAE 127-4	Size 080 SAE 127-4	Size 110 SAE 152-4	Size 160 SAE 152-4	Size 210 SAE 165-4	Size 250 SAE 165-4
AA	275.6 [10.85]	293.2 [11.54]	319.7 [12.59]	346.7 [13.65]	371.6 [14.63]	390.0 [15.35]
AB	164.7 [6.48]	170.6 [6.72]	175.0 [6.89]	183.8 [7.24]	190.9 [7.52]	197.0 [7.76]
EA	212.2 [8.35]	230.0 [9.05]	256.3 [10.09]	283.5 [11.16]	309.2 [12.17]	327.0 [12.87]
EB	128.1 [5.04]	134.0 [5.28]	138.4 [5.45]	147.1 [5.79]	153.9 [6.06]	160.0 [6.30]

DIN B4 HL mounting flange per ISO 3019/2 dimensions, (mm [in])

	Size 060 – DIN 125	Size 080 – DIN 140	Size 110 – DIN 160	Size 160 – DIN 180	Size 210 – DIN 200
AA	251.1 [9.89]	269.2 [10.60]	287.2 [11.31]	314.8 [12.39]	339.6 [13.37]
AB	164.7 [6.48]	170.6 [6.72]	175.0 [6.89]	183.8 [7.24]	190.9 [7.52]
EA	187.7 [7.39]	205.8 [8.10]	223.8 [8.81]	251.6 [9.91]	277.2 [10.91]
EB	128.1 [5.04]	134.0 [5.28]	138.4 [5.45]	147.1 [5.79]	153.9 [6.06]

Size 250 is not available.

Cartridge mounting flange dimensions (mm [in])

	Size 060 Cartridge 160	Size 080 Cartridge 190	Size 110 Cartridge 200	Size 160 Cartridge 200
AA	191.4 [7.54]	190.8 [7.51]	205.2 [8.08]	232.4 [9.15]
AB	164.7 [6.48]	170.6 [6.72]	175.0 [6.89]	183.8 [7.24]
EA	128.0 [5.03]	127.4 [5.02]	141.8 [5.58]	169.2 [6.66]
EB	128.1 [5.04]	134.0 [5.28]	138.4 [5.45]	147.1 [5.79]

Size 210 and 250 are not available.

Control dimensions

Option D*M* (Electric proportional control)

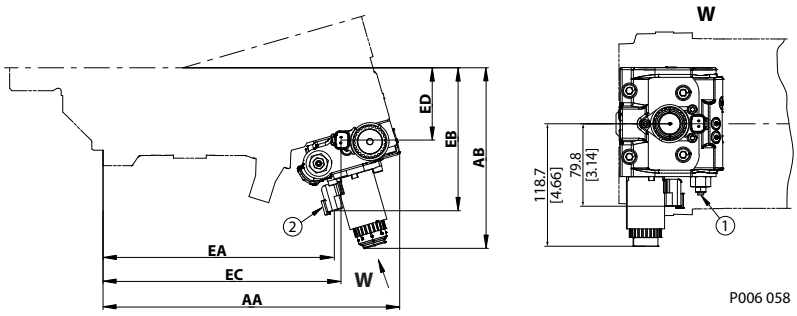

1. PCOR adjustment
2. *Connector:* DEUTSCH DT04-2P

SAE mounting flange per ISO 3019/1 dimensions (mm [in])

	Size 060 SAE 127-4	Size 080 SAE 127-4	Size 110 SAE 152-4	Size 160 SAE 152-4	Size 210 SAE 165-4	Size 250 SAE 165-4
AA	275.6 [10.85]	293.2 [11.54]	319.7 [12.59]	346.7 [13.65]	371.6 [14.63]	390.0 [15.35]
AB	164.7 [6.48]	170.6 [6.72]	175.0 [6.89]	183.8 [7.24]	190.9 [7.52]	197.0 [7.76]
EA	212.2 [8.35]	230.0 [9.05]	256.3 [10.09]	283.5 [11.16]	309.2 [12.17]	327.0 [12.87]
EB	128.1 [5.04]	134.0 [5.28]	138.4 [5.45]	147.1 [5.79]	153.9 [6.06]	160.0 [6.30]
EC	218.6 [8.61]	236.3 [9.30]	262.8 [10.35]	290.0 [11.42]	314.7 [12.39]	333.0 [13.11]
ED	59.8 [2.35]	65.7 [2.59]	70.1 [2.76]	78.8 [3.10]	86.9 [3.42]	92.0 [3.62]

DIN B4 HL mounting flange per ISO 3019/2 dimensions, (mm [in])

	Size 060 – DIN 125	Size 080 – DIN 140	Size 110 – DIN 160	Size 160 – DIN 180	Size 210 – DIN 200
AA	251.1 [9.89]	269.2 [10.60]	287.2 [11.31]	314.8 [12.39]	339.6 [13.37]
AB	164.7 [6.48]	170.6 [6.72]	175.0 [6.89]	183.8 [7.24]	190.9 [7.52]
EA	187.7 [7.39]	205.8 [8.10]	223.8 [8.81]	251.6 [9.91]	277.2 [10.91]
EB	128.1 [5.04]	134.0 [5.28]	138.4 [5.45]	147.1 [5.79]	153.9 [6.06]
EC	194.1 [7.64]	212.3 [8.36]	230.3 [9.07]	258.1 [10.16]	282.7 [11.13]
ED	59.8 [2.35]	65.7 [2.59]	70.1 [2.76]	78.8 [3.10]	86.9 [3.42]

Size 250 is not available.

Cartridge mounting flange dimensions (mm [in])

	Size 060 Cartridge 160	Size 080 Cartridge 190	Size 110 Cartridge 200	Size 160 Cartridge 200
AA	191.4 [7.54]	190.8 [7.51]	205.2 [8.08]	232.4 [9.15]
AB	164.7 [6.48]	170.6 [6.72]	175.0 [6.89]	183.8 [7.24]
EA	128.0 [5.03]	127.4 [5.02]	141.8 [5.58]	169.2 [6.66]
EB	128.1 [5.04]	134.0 [5.28]	138.4 [5.45]	147.1 [5.79]
EC	134.4 [5.29]	133.9 [5.27]	148.3 [5.84]	175.7 [6.92]
ED	59.8 [2.35]	65.7 [2.59]	70.1 [2.76]	78.8 [3.10]

Size 210 and 250 are not available.

Control dimensions

Options M1CA and M2CA (Electric proportional control)

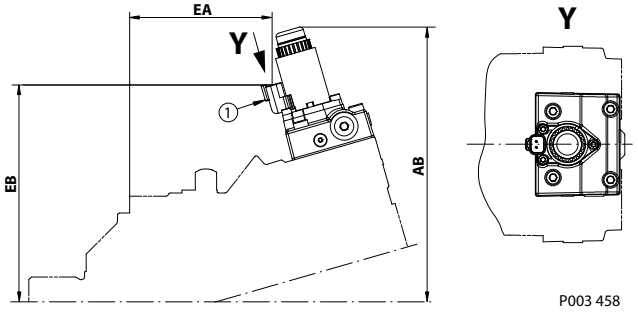

1. *Connector:* DEUTSCH DT04-2P

H1 B Dimensions reused tables

SAE mounting flange per ISO 3019/1 dimensions (mm [in])

	Size 060 SAE 127-4	Size 080 SAE 127-4	Size 110 SAE 152-4	Size 160 SAE 152-4	Size 210 SAE 165-4	Size 250 SAE 165-4
AB	224.2 [8.83]	235.7 [9.28]	247.2 [9.73]	265.0 [10.43]	279.4 [11]	290.0 [11.42]
EA	126.1 [4.96]	138.8 [5.46]	160.7 [6.33]	180.4 [7.10]	199.9 [7.87]	213.0 [8.39]
EB	172.2 [6.78]	183.6 [7.23]	195.1 [7.68]	212.8 [8.38]	227.5 [8.96]	238.0 [9.37]

DIN B4 HL mounting flange per ISO 3019/2 dimensions, (mm [in])

	Size 060 – DIN 125	Size 080 – DIN 140	Size 110 – DIN 160	Size 160 – DIN 180	Size 210 – DIN 200
AB	224.2 [8.83]	235.7 [9.28]	247.2 [9.73]	265.0 [10.43]	279.4 [11]
EA	101.6 [4.0]	114.8 [4.52]	128.2 [5.05]	148.5 [5.85]	167.9 [6.61]
EB	172.2 [6.78]	183.6 [7.23]	195.1 [7.68]	212.8 [8.38]	227.5 [8.96]

Size 250 is not available.

Cartridge mounting flange dimensions (mm [in])

	Size 060 Cartridge 160	Size 080 Cartridge 190	Size 110 Cartridge 200	Size 160 Cartridge 200
AB	224.2 [8.83]	235.7 [9.28]	247.2 [9.73]	265.0 [10.43]
EA	41.9 [1.65]	36.4 [1.43]	46.2 [1.82]	66.1 [2.60]
EB	172.2 [6.78]	183.6 [7.23]	195.1 [7.68]	212.8 [8.38]

Size 210 and 250 are not available.

Control dimensions

Option K*KA (Electric proportional control)

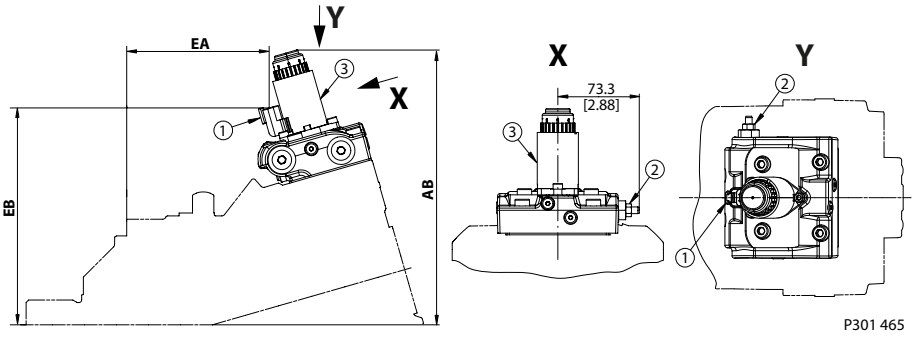

1. *Connector:* DEUTSCH DT04-2P
2. PCOR adjustment
3. Electric proportional solenoid

H1 B Dimensions reused tables

SAE mounting flange per ISO 3019/1 dimensions (mm [in])

	Size 060 SAE 127-4	Size 080 SAE 127-4	Size 110 SAE 152-4	Size 160 SAE 152-4	Size 210 SAE 165-4	Size 250 SAE 165-4
AB	224.2 [8.83]	235.7 [9.28]	247.2 [9.73]	265.0 [10.43]	279.4 [11]	290.0 [11.42]
EA	126.1 [4.96]	138.8 [5.46]	160.7 [6.33]	180.4 [7.10]	199.9 [7.87]	213.0 [8.39]
EB	172.2 [6.78]	183.6 [7.23]	195.1 [7.68]	212.8 [8.38]	227.5 [8.96]	238.0 [9.37]

DIN B4 HL mounting flange per ISO 3019/2 dimensions, (mm [in])

	Size 060 – DIN 125	Size 080 – DIN 140	Size 110 – DIN 160	Size 160 – DIN 180	Size 210 – DIN 200
AB	224.2 [8.83]	235.7 [9.28]	247.2 [9.73]	265.0 [10.43]	279.4 [11]
EA	101.6 [4.0]	114.8 [4.52]	128.2 [5.05]	148.5 [5.85]	167.9 [6.61]
EB	172.2 [6.78]	183.6 [7.23]	195.1 [7.68]	212.8 [8.38]	227.5 [8.96]

Size 250 is not available.

Cartridge mounting flange dimensions (mm [in])

	Size 060 Cartridge 160	Size 080 Cartridge 190	Size 110 Cartridge 200	Size 160 Cartridge 200
AB	224.2 [8.83]	235.7 [9.28]	247.2 [9.73]	265.0 [10.43]
EA	41.9 [1.65]	36.4 [1.43]	46.2 [1.82]	66.1 [2.60]
EB	172.2 [6.78]	183.6 [7.23]	195.1 [7.68]	212.8 [8.38]

Size 210 and 250 are not available.

Control dimensions

Options K1K1 and K2K2 (Electric proportional control with PCOR and BPD)

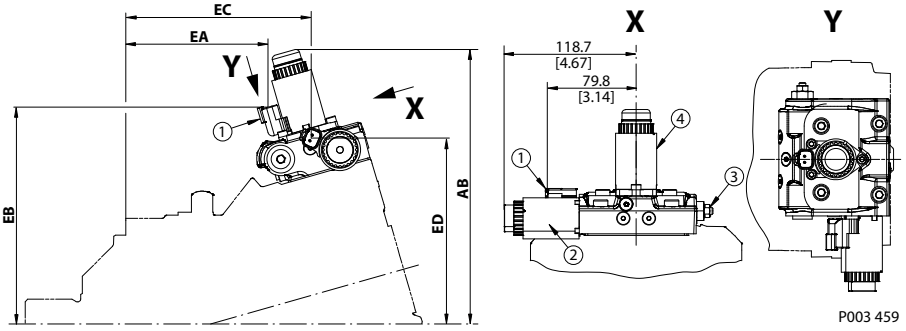

1. *Connector:* DEUTSCH DT04-2P
2. BPD solenoid
3. PCOR adjustment
4. Proportional solenoid

SAE mounting flange per ISO 3019/1 dimensions (mm [in])

	Size 060 SAE 127-4	Size 080 SAE 127-4	Size 110 SAE 152-4	Size 160 SAE 152-4	Size 210 SAE 165-4	Size 250 SAE 165-4
AB	224.2 [8.83]	235.7 [9.28]	247.2 [9.73]	265.0 [10.43]	279.4 [11]	290.0 [11.42]
EA	126.1 [4.96]	138.8 [5.46]	160.7 [6.33]	180.4 [7.10]	199.9 [7.87]	213.0 [8.39]
EB	172.2 [6.78]	183.6 [7.23]	195.1 [7.68]	212.8 [8.38]	227.5 [8.96]	238.0 [9.37]
EC	164.8 [6.49]	177.4 [6.98]	199.4 [7.85]	219.0 [8.62]	238 [9.37]	251.0 [9.88]
ED	144.5 [5.69]	156.0 [6.14]	167.5 [6.59]	185.1 [7.29]	200.6 [7.9]	210.0 [8.27]

DIN B4 HL mounting flange per ISO 3019/2 dimensions, (mm [in])

	Size 060 – DIN 125	Size 080 – DIN 140	Size 110 – DIN 160	Size 160 – DIN 180	Size 210 – DIN 200
AB	224.2 [8.83]	235.7 [9.28]	247.2 [9.73]	265.0 [10.43]	279.4 [11]
EA	101.6 [4.0]	114.8 [4.52]	128.2 [5.05]	148.5 [5.85]	167.9 [6.61]
EB	172.2 [6.78]	183.6 [7.23]	195.1 [7.68]	212.8 [8.38]	227.5 [8.96]
EC	140.3 [5.52]	153.4 [6.04]	166.9 [6.57]	187.1 [7.37]	206.0 [8.11]
ED	144.5 [5.69]	156.0 [6.14]	167.5 [6.59]	185.1 [7.29]	200.6 [7.9]

Size 250 is not available.

Cartridge mounting flange dimensions (mm [in])

	Size 060 Cartridge 160	Size 080 Cartridge 190	Size 110 Cartridge 200	Size 160 Cartridge 200
AB	224.2 [8.83]	235.7 [9.28]	247.2 [9.73]	265.0 [10.43]
EA	41.9 [1.65]	36.4 [1.43]	46.2 [1.82]	66.1 [2.60]
EB	172.2 [6.78]	183.6 [7.23]	195.1 [7.68]	212.8 [8.38]
EC	80.6 [3.17]	75.0 [2.95]	84.9 [3.34]	104.7 [4.12]
ED	144.5 [5.69]	156.0 [6.14]	167.5 [6.59]	185.1 [7.29]

Size 210 and 250 are not available.

Control dimensions

Options E1AA and E2AA (Electric two-position control)

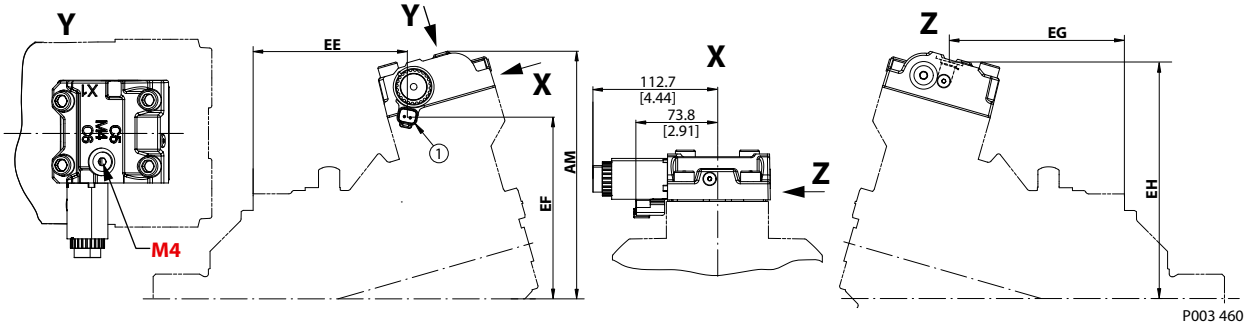

M4 Servo gauge port: ISO 11926-1 SAE 9/16 -18UNF-2B or ISO6149 M14 x 1.5; Ø25.0 [0.98] max. clearance DIA for fitting

1 Electric two-position control

SAE mounting flange per ISO 3019/1 dimensions (mm [in])

	Size 060 SAE 127-4	Size 080 SAE 127-4	Size 110 SAE 152-4	Size 160 SAE 152-4	Size 210 SAE 165-4	Size 250 SAE 165-4
AM	193.6 [7.62]	206.6 [8.13]	224.1 [8.82]	224.1 [8.82]	257.7 [10.15]	267.0 [10.51]
EE	139.8 [5.50]	149.7 [5.89]	172.1 [6.78]	191.3 [7.53]	210.1 [8.27]	225.0 [8.86]
EF	133.9 [5.27]	146.9 [5.78]	164.4 [6.47]	182.9 [7.20]	198.3 [7.81]	208.0 [8.19]
EG	158.8 [6.25]	168.8 [6.65]	191.1 [7.52]	210.4 [8.28]	230.2 [9.06]	244.0 [9.61]
EH	184.0 [7.24]	196.9 [7.75]	214.4 [8.44]	214.4 [8.44]	210.1 [8.27]	258.0 [10.16]

DIN B4 HL mounting flange per ISO 3019/2 dimensions, (mm [in])

	Size 060 – DIN 125	Size 080 – DIN 140	Size 110 – DIN 160	Size 160 – DIN 180	Size 210 – DIN 200
AM	193.6 [7.62]	206.6 [8.13]	224.1 [8.82]	224.1 [8.82]	257.7 [10.15]
EE	115.3 [4.54]	125.7 [4.95]	139.6 [5.50]	159.4 [6.28]	178.1 [7.01]
EF	133.9 [5.27]	146.9 [5.78]	164.4 [6.47]	182.9 [7.20]	198.3 [7.81]
EG	134.3 [5.29]	144.8 [5.70]	158.6 [6.24]	178.5 [7.03]	198.2 [7.8]
EH	184.0 [7.24]	196.9 [7.75]	214.4 [8.44]	214.4 [8.44]	178.1 [7.01]

Size 250 is not available.

Cartridge mounting flange dimensions (mm [in])

	Size 060 Cartridge 160	Size 080 Cartridge 190	Size 110 Cartridge 200	Size 160 Cartridge 200
AM	193.6 [7.62]	206.6 [8.13]	224.1 [8.82]	224.1 [8.82]
EE	55.6 [2.19]	47.3 [1.86]	57.6 [2.27]	77.0 [3.03]
EF	133.9 [5.27]	146.9 [5.78]	164.4 [6.47]	182.9 [7.20]
EG	74.6 [2.94]	66.4 [2.61]	76.6 [3.02]	96.1 [3.78]
EH	184.0 [7.24]	196.9 [7.75]	214.4 [8.44]	214.4 [8.44]

Size 210 and 250 are not available.

Control dimensions

Options F1EA and F2EA (Electric two-position control)

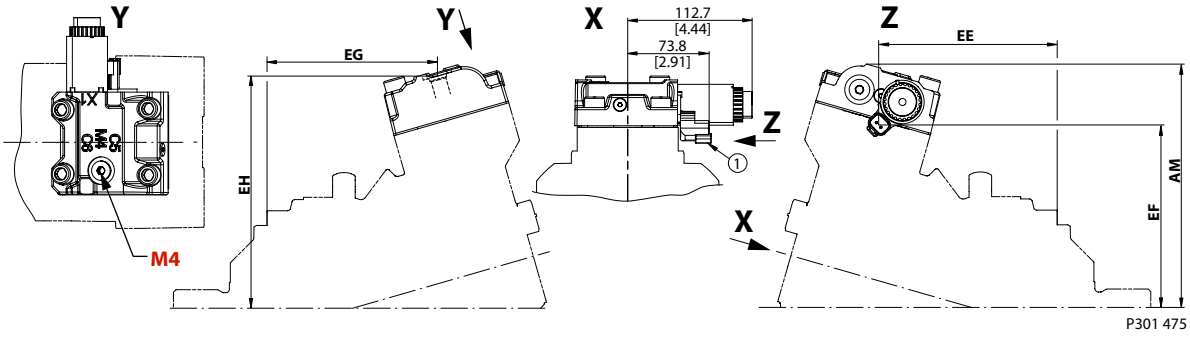

M4 Servo gauge port: ISO 11926-1 SAE 9/16 -18UNF-2B or ISO6149 M14 x 1.5; Ø25.0 [0.98] max. clearance DIA for fitting

1 *Connector:* DEUTSCH DT04-2P

SAE mounting flange per ISO 3019/1 dimensions (mm [in])

	Size 060 SAE 127-4	Size 080 SAE 127-4	Size 110 SAE 152-4	Size 160 SAE 152-4	Size 210 SAE 165-4	Size 250 SAE 165-4
AM	193.6 [7.62]	206.6 [8.13]	224.1 [8.82]	242.5 [9.55]	257.7 [10.15]	267.3 [10.53]
EE	165.7 [6.55]	175.8 [6.92]	198.0 [7.80]	217.3 [8.56]	237.1 [9.33]	250.8 [9.87]
EF	141.9 [5.59]	154.9 [6.10]	172.4 [6.79]	190.9 [7.52]	206.1 [8.11]	215.7 [8.49]
EG	158.8 [6.25]	168.8 [6.65]	191.1 [7.52]	210.4 [8.28]	230.2 [9.06]	243.9 [9.60]
EH	184.0 [7.24]	196.9 [7.75]	214.4 [8.44]	232.9 [9.17]	248.1 [9.77]	257.7 [10.15]

DIN B4 HL mounting flange per ISO 3019/2 dimensions, (mm [in])

	Size 060 – DIN 125	Size 080 – DIN 140	Size 110 – DIN 160	Size 160 – DIN 180	Size 210 – DIN 200
AM	193.6 [7.62]	206.6 [8.13]	224.1 [8.82]	242.5 [9.55]	257.7 [10.15]
EE	141.2 [5.56]	151.7 [5.97]	165.5 [6.52]	185.4 [7.30]	205.1 [8.07]
EF	141.9 [5.59]	154.9 [6.10]	172.4 [6.79]	190.9 [7.52]	206.1 [8.11]
EG	134.3 [5.29]	144.8 [5.70]	158.6 [6.24]	178.5 [7.03]	198.2 [7.8]
EH	184.0 [7.24]	196.9 [7.75]	214.4 [8.44]	232.9 [9.17]	248.1 [9.77]

Size 250 is not available.

Cartridge mounting flange dimensions (mm [in])

	Size 060 Cartridge 160	Size 080 Cartridge 190	Size 110 Cartridge 200	Size 160 Cartridge 200
AM	193.6 [7.62]	206.6 [8.13]	224.1 [8.82]	242.5 [9.55]
EE	81.5 [2.19]	73.3 [2.89]	83.5 [3.29]	103.0 [4.06]
EF	141.9 [5.59]	154.9 [6.10]	172.4 [6.79]	190.9 [7.52]
EG	74.6 [2.94]	66.4 [2.61]	76.6 [3.02]	96.1 [3.78]
EH	184.0 [7.24]	196.9 [7.75]	214.4 [8.44]	232.9 [9.17]

Size 210 and 250 are not available.

Control dimensions

Options T1DA, T2DA and P1DA, P2DA (Electric two-position controls with PCOR and electric proportional PPCOR)

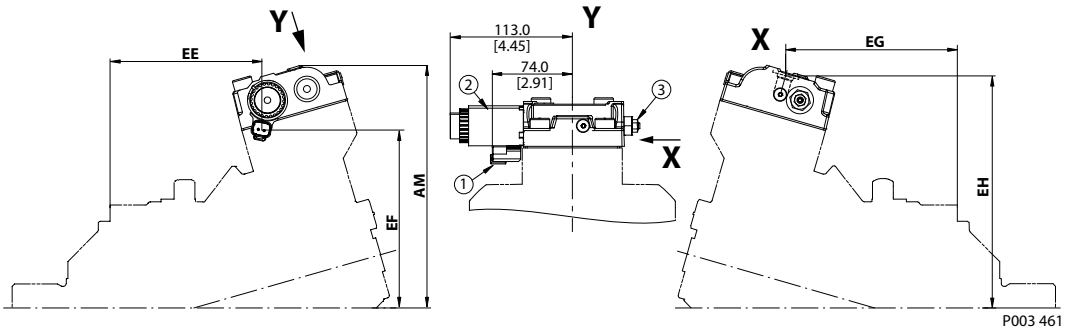

1. *Connector:* DEUTSCH DT04-2P
2. Two-position solenoid "T" or Proportional PCOR "P"
3. PCOR adjustment

SAE mounting flange per ISO 3019/1 dimensions (mm [in])

	Size 060 SAE 127-4	Size 080 SAE 127-4	Size 110 SAE 152-4	Size 160 SAE 152-4	Size 210 SAE 165-4	Size 250 SAE 165-4
AM	193.6 [7.62]	206.6 [8.13]	224.1 [8.82]	242.5 [9.55]	257.7 [10.15]	267.3 [10.53]
EE	139.8 [5.50]	149.7 [5.89]	172.1 [6.78]	191.3 [7.53]	210.1 [8.27]	225.0 [8.86]
EF	133.9 [5.27]	146.9 [5.78]	164.4 [6.47]	182.9 [7.20]	198.3 [7.81]	208.0 [8.19]
EG	158.8 [6.25]	168.8 [6.65]	191.1 [7.52]	210.4 [8.28]	230.2 [9.06]	244.0 [9.61]
EH	183.9 [6.71]	196.9 [7.75]	214.4 [8.44]	232.9 [9.17]	248.1 [9.77]	258.0 [10.16]

DIN B4 HL mounting flange per ISO 3019/2 dimensions, (mm [in])

	Size 060 – DIN 125	Size 080 – DIN 140	Size 110 – DIN 160	Size 160 – DIN 180	Size 210 – DIN 200
AM	193.6 [7.62]	206.6 [8.13]	224.1 [8.82]	242.5 [9.55]	257.7 [10.15]
EE	115.3 [4.54]	125.7 [4.95]	139.6 [5.50]	159.4 [6.28]	178.1 [7.01]
EF	133.9 [5.27]	146.9 [5.78]	164.4 [6.47]	182.9 [7.20]	198.3 [7.81]
EG	134.3 [5.29]	144.8 [5.70]	158.6 [6.24]	178.5 [7.03]	198.2 [7.8]
EH	183.9 [6.71]	196.9 [7.75]	214.4 [8.44]	232.9 [9.17]	248.1 [9.77]

Size 250 is not available.

Cartridge mounting flange dimensions (mm [in])

	Size 060 Cartridge 160	Size 080 Cartridge 190	Size 110 Cartridge 200	Size 160 Cartridge 200
AM	193.6 [7.62]	206.6 [8.13]	224.1 [8.82]	242.5 [9.55]
EE	55.6 [2.19]	47.3 [1.86]	57.6 [2.27]	77.0 [3.03]
EF	133.9 [5.27]	146.9 [5.78]	164.4 [6.47]	182.9 [7.20]
EG	74.6 [2.94]	66.4 [2.61]	76.6 [3.02]	96.1 [3.78]
EH	183.9 [6.71]	196.9 [7.75]	214.4 [8.44]	232.9 [9.17]

Size 210 and 250 are not available.

Control dimensions

Options T1D1, T2D2 and P1D1, P2D2 (Electric two-position controls with PCOR, BPD and electric proportional PPCOR, BPD)

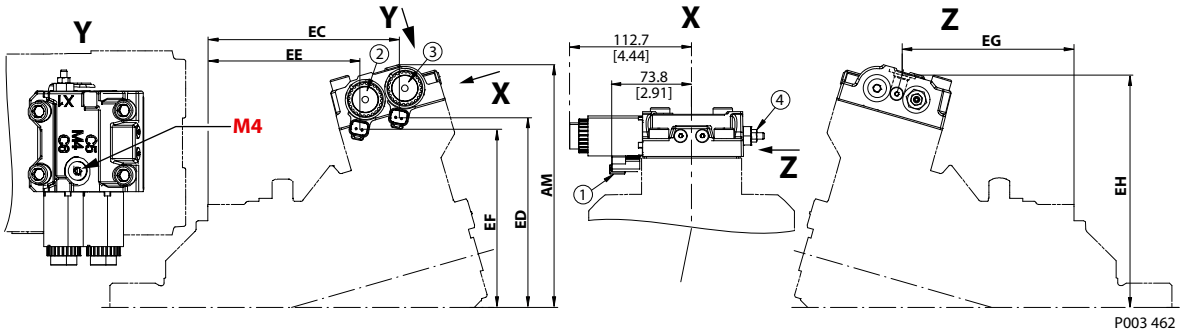

M4 Servo gauge port: ISO 11926-1 SAE 9/16 -18UNF-2B or ISO6149 M14 x 1.5; Ø25.0 [0.98] max. clearance DIA for fitting

1. *Connector:* DEUTSCH DT04-2P
2. Two-position solenoid "T" or Proportional PCOR "P"
3. BPD solenoid
4. PCOR adjustment

SAE mounting flange per ISO 3019/1 dimensions (mm [in])

	Size 060 SAE 127-4	Size 080 SAE 127-4	Size 110 SAE 152-4	Size 160 SAE 152-4	Size 210 SAE 165-4	Size 250 SAE 165-4
AM	193.6 [7.62]	206.6 [8.13]	224.1 [8.82]	242.5 [9.55]	257.7 [10.15]	267.3 [10.53]
EC	176.3 [6.94]	186.3 [7.33]	208.6 [8.21]	227.9 [8.97]	246.6 [9.71]	261.0 [10.0]
ED	144.4 [5.69]	157.3 [6.19]	174.9 [6.89]	193.3 [7.61]	208.8 [8.22]	218.0 [8.58]
EE	139.8 [5.50]	149.7 [5.89]	172.1 [6.78]	191.3 [7.53]	210.1 [8.27]	225.0 [8.86]
EF	133.9 [5.27]	146.9 [5.78]	164.4 [6.47]	182.9 [7.20]	198.3 [7.81]	208.0 [8.19]
EG	158.8 [6.25]	168.8 [6.65]	191.1 [7.52]	210.4 [8.28]	230.2 [9.06]	244.0 [9.61]
EH	183.9 [6.71]	196.9 [7.75]	214.4 [8.44]	232.9 [9.17]	248.1 [9.77]	258.0 [10.16]

DIN B4 HL mounting flange per ISO 3019/2 dimensions, (mm [in])

	Size 060 DIN 125	Size 080 DIN 140	Size 110 DIN 160	Size 160 DIN 180	Size 210 DIN 200
AM	193.6 [7.62]	206.6 [8.13]	224.1 [8.82]	242.5 [9.55]	257.7 [10.15]
EC	151.8 [5.98]	162.3 [6.39]	176.1 [6.93]	196.0 [7.72]	214.6 [8.45]
ED	144.4 [5.69]	157.3 [6.19]	174.9 [6.89]	193.3 [7.61]	208.8 [8.22]
EE	115.3 [4.54]	125.7 [4.95]	139.6 [5.50]	159.4 [6.28]	178.1 [7.01]
EF	133.9 [5.27]	146.9 [5.78]	164.4 [6.47]	182.9 [7.20]	198.3 [7.81]
EG	134.3 [5.29]	144.8 [5.70]	158.6 [6.24]	178.5 [7.03]	198.2 [7.8]
EH	183.9 [6.71]	196.9 [7.75]	214.4 [8.44]	232.9 [9.17]	248.1 [9.77]

Cartridge mounting flange dimensions (mm [in])

	Size 060 Cartridge 160	Size 080 Cartridge 190	Size 110 Cartridge 200	Size 160 Cartridge 200
AM	193.6 [7.62]	206.6 [8.13]	224.1 [8.82]	242.5 [9.55]
EC	92.1 [3.63]	83.9 [3.30]	94.1 [3.70]	113.6 [4.47]
ED	144.4 [5.69]	157.3 [6.19]	174.9 [6.89]	193.3 [7.61]

Control dimensions

Cartridge mounting flange dimensions (mm [in]) (continued)

	Size 060 Cartridge 160	Size 080 Cartridge 190	Size 110 Cartridge 200	Size 160 Cartridge 200
EE	55.6 [2.19]	47.3 [1.86]	57.6 [2.27]	77.0 [3.03]
EF	133.9 [5.27]	146.9 [5.78]	164.4 [6.47]	182.9 [7.20]
EG	74.6 [2.94]	66.4 [2.61]	76.6 [3.02]	96.1 [3.78]
EH	183.9 [6.71]	196.9 [7.75]	214.4 [8.44]	232.9 [9.17]

Control dimensions

Option LHBA (Hydraulic proportional control)

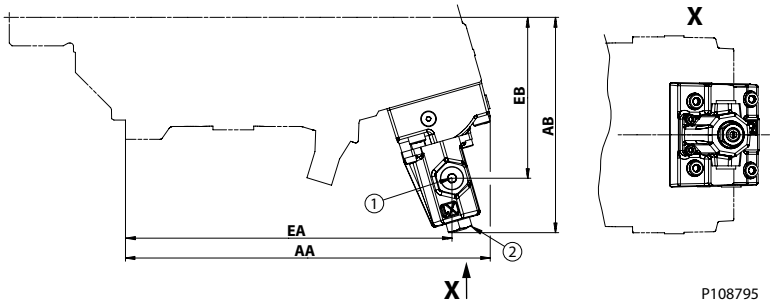

1. Pilot Pressure Gauge Port "X1": ISO 11926-1 9/16-8 or ISO 6149 M14 x 1.5
2. Start pressure adjustment screw

SAE mounting flange per ISO 3019/1 dimensions (mm [in])

	Size 060 SAE 127-4	Size 080 SAE 127-4	Size 110 SAE 152-4	Size 160 SAE 152-4	Size 210 SAE 165-4	Size 250 SAE 165-4
AA	272.3 [10.72]	289.9 [11.41]	316.4 [12.46]	343.8 [13.53]	371.6 [14.63]	390.3 [15.37]
AB	157.4 [6.20]	163.3 [6.43]	167.7 [6.60]	176.4 [6.94]	183.5 [7.22]	189.6 [7.46]
EA	242.6 [9.55]	260.3 [10.25]	286.8 [11.29]	314.00 [12.36]	337.8 [13.3]	357.4 [14.07]
EB	115.0 [4.53]	120.9 [4.76]	138.4 [4.93]	134.0 [5.28]	141.1 [5.56]	147.3 [5.80]

DIN B4 HL mounting flange per ISO 3019/2 dimensions, (mm [in])

	Size 060 – DIN 125	Size 080 – DIN 140	Size 110 – DIN 160	Size 160 – DIN 180	Size 210 – DIN 200
AA	247.8 [9.76]	265.9 [10.47]	283.9 [11.18]	311.7 [12.27]	339.6 [13.37]
AB	157.4 [6.20]	163.3 [6.43]	167.7 [6.60]	176.4 [6.94]	183.5 [7.22]
EA	218.1 [8.59]	236.3 [9.30]	254.3 [10.01]	282.1 [11.11]	306.7 [12.07]
EB	115.0 [4.53]	120.9 [4.76]	125.3 [4.93]	134.0 [5.28]	141.1 [5.56]

Size 250 is not available.

Cartridge mounting flange dimensions (mm [in])

	Size 060 Cartridge 160	Size 080 Cartridge 190	Size 110 Cartridge 200	Size 160 Cartridge 200
AA	188.1 [7.41]	187.5 [7.38]	201.9 [7.95]	229.3 [9.03]
AB	157.4 [6.20]	163.3 [6.43]	167.7 [6.60]	176.4 [6.94]
EA	158.4 [6.24]	169.1 [6.66]	172.3 [6.78]	199.7 [7.86]
EB	115.0 [4.53]	120.9 [4.76]	138.4 [4.93]	134.0 [5.28]

Size 210 and 250 are not available.

Control dimensions

Option MHCA (Hydraulic proportional control)

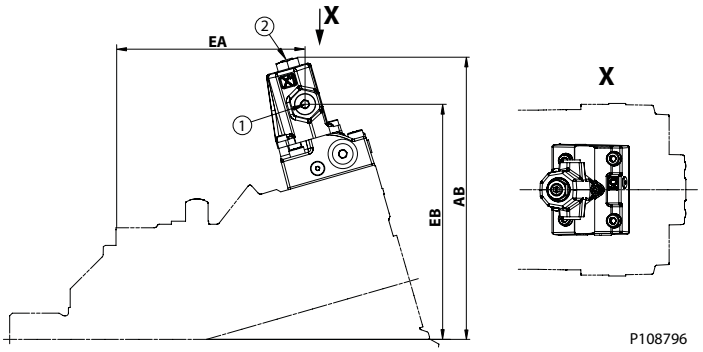

1. Pilot Pressure Gauge Port "X1" ISO 11926-1 9/16-8
2. Start pressure adjustment screw

SAE mounting flange per ISO 3019/1 dimensions (mm [in])

	Size 060 SAE 127-4	Size 080 SAE 127-4	Size 110 SAE 152-4	Size 160 SAE 152-4	Size 210 SAE 165-4	Size 250 SAE 165-4
AB	224.2 [8.83]	228.4 [8.99]	239.9 [9.44]	257.6 [10.14]	272 [10.71]	282.8 [11.13]
EA	158.8 [6.25]	171.5 [6.75]	193.4 [7.61]	213.1 [8.39]	231.7 [9.12]	245.5 [9.67]
EB	172.2 [6.78]	188.7 [7.43]	200.2 [7.88]	217.8 [8.57]	232.2 [9.14]	243.0 [9.57]

DIN B4 HL mounting flange per ISO 3019/2 dimensions, (mm [in])

	Size 060 – DIN 125	Size 080 – DIN 140	Size 110 – DIN 160	Size 160 – DIN 180	Size 210 – DIN 200
AB	224.2 [8.83]	228.4 [8.99]	239.9 [9.44]	257.6 [10.14]	272 [10.71]
EA	134.4 [5.28]	147.5 [5.81]	160.9 [6.33]	181.2 [7.13]	199.7 [7.86]
EB	172.2 [6.78]	188.7 [7.43]	200.2 [7.88]	217.8 [8.57]	232.2 [9.14]

Size 250 is not available.

Cartridge mounting flange dimensions (mm [in])

	Size 060 Cartridge 160	Size 080 Cartridge 190	Size 110 Cartridge 200	Size 160 Cartridge 200
AB	224.2 [8.83]	228.4 [8.99]	239.9 [9.44]	257.6 [10.14]
EA	74.6 [2.94]	69.1 [2.72]	78.9 [3.11]	98.8 [3.89]
EB	172.2 [6.78]	188.7 [7.43]	200.2 [7.88]	217.8 [8.57]

Size 210 and 250 are not available.

Control dimensions

Option DHMA (Hydraulic proportional control)

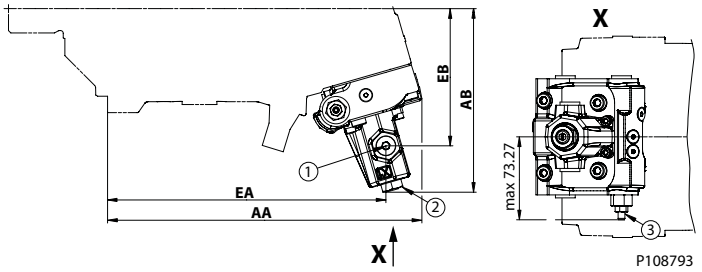

1. Pilot Pressure Gauge Port "X1" ISO 11926-1 9/16-8
2. Start pressure adjustment screw
3. PCOR adjustment screw

SAE mounting flange per ISO 3019/1 dimensions (mm [in])

	Size 060 SAE 127-4	Size 080 SAE 127-4	Size 110 SAE 152-4	Size 160 SAE 152-4	Size 210 SAE 165-4	Size 250 SAE 165-4
AA	275.6 [10.85]	293.2 [11.54]	224.1 [8.82]	346.9 [13.78]	371.6 [14.63]	390.3 [15.37]
AB	157.4 [6.20]	163.3 [6.43]	167.7 [6.60]	176.4 [6.94]	183.5 [7.22]	189.6 [7.46]
EA	242.6 [9.55]	260.3 [10.25]	216.0 [8.50]	314.00 [12.36]	337.8 [13.3]	357.4 [14.07]
EB	115.0 [4.53]	120.9 [4.76]	125.3 [4.93]	133.99 [5.28]	141.1 [5.56]	147.3 [5.80]

DIN B4 HL mounting flange per ISO 3019/2 dimensions, (mm [in])

	Size 060 – DIN 125	Size 080 – DIN 140	Size 110 – DIN 160	Size 160 – DIN 180	Size 210 – DIN 200
AA	251.1 [9.89]	269.2 [10.60]	287.2 [11.31]	315.0 [12.40]	339.6 [13.37]
AB	157.4 [6.20]	163.3 [6.43]	167.7 [6.60]	176.4 [6.94]	183.5 [7.22]
EA	218.1 [8.59]	236.3 [9.30]	254.3 [10.01]	282.1 [11.11]	306.7 [12.07]
EB	115.0 [4.53]	120.9 [4.76]	125.3 [4.93]	133.99 [5.28]	141.1 [5.56]

Size 250 is not available.

Cartridge mounting flange dimensions (mm [in])

	Size 060 Cartridge 160	Size 080 Cartridge 190	Size 110 Cartridge 200	Size 160 Cartridge 200
AA	191.3 [7.54]	190.8 [7.51]	224.1 [8.82]	232.6 [9.16]
AB	157.4 [6.20]	163.3 [6.23]	167.7 [6.60]	176.4 [6.94]
EA	158.4 [6.24]	169.1 [6.66]	216.0 [8.50]	199.7 [7.86]
EB	115.0 [4.53]	120.9 [4.76]	125.3 [4.93]	133.99 [5.28]

Size 210 and 250 are not available.

Control dimensions

Option DHMH (Hydraulic proportional control)

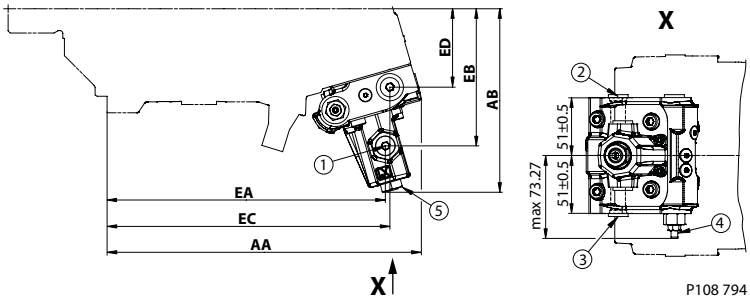

1. Pilot pressure gauge port "X1" ISO 11926-1 9/16-8
2. Pilot pressure BPD port "XA" ISO 11926-1 9/16-8
3. Pilot pressure BPD port "XB" ISO 11926-1 9/16-8
4. PCOR adjustment
5. Start pressure adjustment screw

SAE mounting flange per ISO 3019/1 dimensions (mm [in])

	Size 060 SAE 127-4	Size 080 SAE 127-4	Size 110 SAE 152-4	Size 160 SAE 152-4	Size 210 SAE 165-4	Size 250 SAE 165-4
AA	275.6 [10.85]	293.2 [11.54]	224.1 [8.82]	346.9 [13.78]	371.6 [14.63]	390.3 [15.37]
AB	157.4 [6.20]	163.3 [6.43]	167.7 [6.60]	176.4 [6.94]	183.5 [7.22]	189.6 [7.46]
EA	242.6 [9.55]	260.3 [10.25]	216.0 [8.50]	314.00 [12.36]	337.8 [13.3]	357.4 [14.07]
EB	115.0 [4.53]	120.9 [4.76]	125.3 [4.93]	133.99 [5.28]	141.1 [5.56]	147.3 [5.80]
EC	246.7 [9.71]	264.3 [10.41]	290.8 [11.45]	318.1 [12.52]	342.8 [13.5]	361.5 [14.23]
ED	61.3 [2.41]	67.2 [2.65]	74.6 [2.94]	80.3 [3.16]	87.4 [3.44]	93.6 [3.69]

DIN B4 HL mounting flange per ISO 3019/2 dimensions, (mm [in])

	Size 060 – DIN 125	Size 080 – DIN 140	Size 110 – DIN 160	Size 160 – DIN 180	Size 210 – DIN 200
AA	251.1 [9.89]	269.2 [10.60]	287.2 [11.31]	315.0 [12.40]	339.6 [13.37]
AB	157.4 [6.20]	163.3 [6.43]	167.7 [6.60]	176.4 [6.94]	183.5 [7.22]
EA	218.1 [8.59]	236.3 [9.30]	254.3 [10.01]	282.1 [11.11]	306.7 [12.07]
EB	115.0 [4.53]	120.9 [4.76]	125.3 [4.93]	133.99 [5.28]	141.1 [5.56]
EC	222.2 [8.75]	240.3 [9.46]	258.3 [10.17]	286.2 [11.27]	310.8 [12.24]
ED	61.3 [2.41]	67.2 [2.65]	74.6 [2.94]	80.3 [3.16]	87.4 [3.44]

Size 250 is not available.

Cartridge mounting flange dimensions (mm [in])

	Size 060 Cartridge 160	Size 080 Cartridge 190	Size 110 Cartridge 200	Size 160 Cartridge 200
AA	191.3 [7.54]	190.8 [7.51]	224.1 [8.82]	232.6 [9.16]
AB	157.4 [6.20]	163.3 [6.23]	167.7 [6.60]	176.4 [6.94]
EA	158.4 [6.24]	169.1 [6.66]	216.0 [8.50]	199.7 [7.86]
EB	115.0 [4.53]	120.9 [4.76]	125.3 [4.93]	133.99 [5.28]

Control dimensions

Cartridge mounting flange dimensions (mm [in]) (continued)

	Size 060 Cartridge 160	Size 080 Cartridge 190	Size 110 Cartridge 200	Size 160 Cartridge 200
EC	162.5 [6.40]	173.1 [6.81]	176.3 [6.94]	203.8 [8.02]
ED	61.3 [2.41]	67.2 [2.65]	74.6 [2.94]	80.3 [3.16]

Size 210 and 250 are not available.

Control dimensions

Option HEHE (Hydraulic two-position control)

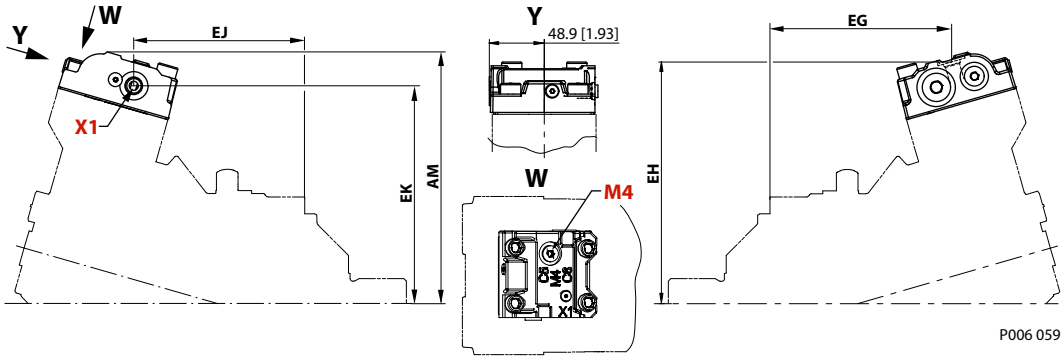

X1 Control pressure port: ISO 11926-1 9/16 -18 or ISO 6149 M14 x 1.5

M4 Servo pressure supply gauge port: ISO 11926-1 9/16 -18 or ISO 6149 M14 x 1.5

SAE mounting flange per ISO 3019/1 dimensions (mm [in])

	Size 060 SAE 127-4	Size 080 SAE 127-4	Size 110 SAE 152-4	Size 160 SAE 152-4	Size 210 SAE 165-4	Size 250 SAE 165-4
AM	193.6 [7.62]	206.6 [8.13]	224.1 [8.82]	242.5 [9.55]	257.7 [10.15]	267.0 [10.51]
EG	161.9 [6.37]	171.8 [6.76]	194.2 [7.65]	213.5 [8.41]	203.5 [8.01]	247.0 [9.72]
EH	184.8 [7.28]	197.8 [7.79]	215.3 [8.48]	233.8 [9.20]	249.6 [9.83]	259.0 [10.2]
EJ	152.2 [5.99]	162.2 [6.39]	185.5 [7.30]	203.8 [8.02]	223.7 [8.81]	237.0 [9.33]
EK	163.3 [6.43]	176.3 [6.94]	193.8 [7.63]	212.3 [8.36]	227.5 [8.96]	237.0 [9.33]

DIN B4 HL mounting flange per ISO 3019/2 dimensions, (mm [in])

	Size 060 – DIN 125	Size 080 – DIN 140	Size 110 – DIN 160	Size 160 – DIN 180	Size 210 – DIN 200
AM	193.6 [7.62]	206.6 [8.13]	224.1 [8.82]	242.5 [9.55]	257.7 [10.15]
EG	137.4 [5.41]	147.8 [5.82]	161.7 [6.37]	181.6 [7.15]	203.5 [8.01]
EH	184.8 [7.28]	197.8 [7.79]	215.3 [8.48]	233.8 [9.20]	249.6 [9.83]
EJ	127.7 [5.03]	138.2 [5.44]	152.0 [5.98]	171.9 [6.77]	191.7 [7.55]
EK	163.3 [6.43]	176.3 [6.94]	193.8 [7.63]	212.3 [8.36]	227.5 [8.96]

Size 250 is not available.

Cartridge mounting flange dimensions (mm [in])

	Size 060 Cartridge 160	Size 080 Cartridge 190	Size 110 Cartridge 200	Size 160 Cartridge 200
AM	193.6 [7.62]	206.6 [8.13]	224.1 [8.82]	242.5 [9.55]
EG	77.7 [3.06]	69.4 [2.73]	79.7 [3.14]	99.2 [3.91]
EH	184.8 [7.28]	197.8 [7.79]	215.3 [8.48]	233.8 [9.20]
EJ	68.0 [2.68]	59.8 [2.35]	70.0 [2.76]	89.5 [3.52]
EK	163.3 [6.43]	176.3 [6.94]	193.8 [7.63]	212.3 [8.36]

Size 210 and 250 are not available.

Control dimensions

Option HFHF (Hydraulic two-position control)

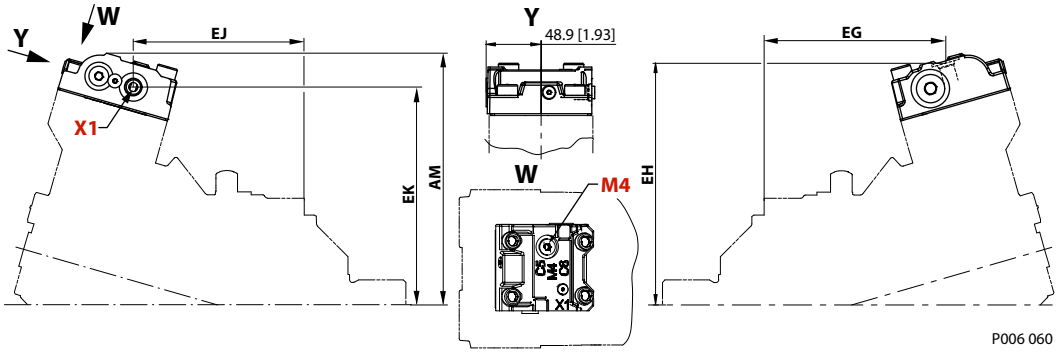

X1 Control pressure port: ISO 11926-1 9/16 -18 or ISO 6149 M14 x 1.5

M4 Servo pressure supply gauge port: ISO 11926-1 9/16 -18 or ISO 6149 M14 x 1.5

SAE mounting flange per ISO 3019/1 dimensions (mm [in])

	Size 060 SAE 127-4	Size 080 SAE 127-4	Size 110 SAE 152-4	Size 160 SAE 152-4	Size 210 SAE 165-4	Size 250 SAE 165-4
AM	193.6 [7.62]	206.6 [8.13]	224.1 [8.82]	242.5 [9.55]	257.7 [10.15]	267.0 [10.51]
EG	164.1 [6.46]	174.0 [6.85]	194.4 [7.73]	215.7 [8.49]	216.9 [8.54]	249.0 [9.80]
EH	185.5 [7.30]	198.4 [7.81]	216.0 [8.50]	234.4 [9.23]	225.6 [8.88]	259.0 [10.2]
EJ	152.2 [5.99]	162.2 [6.39]	184.5 [7.26]	203.8 [8.02]	230.2 [9.06]	237.0 [9.33]
EK	163.3 [6.43]	176.3 [6.94]	193.8 [7.63]	212.3 [8.36]	248.1 [9.77]	237.0 [9.33]

DIN B4 HL mounting flange per ISO 3019/2 dimensions, (mm [in])

	Size 060 – DIN 125	Size 080 – DIN 140	Size 110 – DIN 160	Size 160 – DIN 180	Size 210 – DIN 200
AM	193.6 [7.62]	206.6 [8.13]	224.1 [8.82]	242.5 [9.55]	257.7 [10.15]
EG	139.6 [5.50]	150.0 [5.91]	163.9 [6.45]	183.8 [7.24]	184.9 [7.28]
EH	185.5 [7.30]	198.4 [7.81]	216.0 [8.50]	234.4 [9.23]	225.6 [8.88]
EJ	127.7 [5.03]	138.2 [5.44]	152.0 [5.98]	171.9 [6.77]	198.2 [7.8]
EK	163.3 [6.43]	176.3 [6.94]	193.8 [7.63]	212.3 [8.36]	248.1 [9.77]

Size 250 is not available.

Cartridge mounting flange dimensions (mm [in])

	Size 060 Cartridge 160	Size 080 Cartridge 190	Size 110 Cartridge 200	Size 160 Cartridge 200
AM	193.6 [7.62]	206.6 [8.13]	224.1 [8.82]	242.5 [9.55]
EG	79.9 [3.15]	71.6 [2.82]	81.9 [3.22]	101.4 [3.99]
EH	185.5 [7.30]	198.4 [7.81]	216.0 [8.50]	234.4 [9.23]
EJ	68.0 [2.68]	59.8 [2.35]	70.0 [2.76]	89.5 [3.52]
EK	163.3 [6.43]	176.3 [6.94]	193.8 [7.63]	212.3 [8.36]

Size 210 and 250 are not available.

Control dimensions

Option THHA (Hydraulic two-position control)

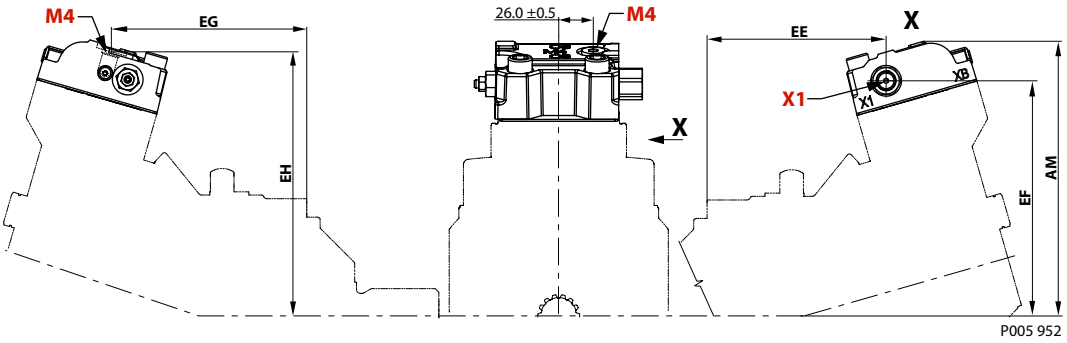

M4 Servo gauge port ISO 11926-1; 9/16 -18UNF-2B

X1 Pilot pressure gauge port ISO 11926-1 9/16-8

SAE mounting flange per ISO 3019/1 dimensions (mm [in])

	Size 060 SAE 127-4	Size 080 SAE 127-4	Size 110 SAE 152-4	Size 160 SAE 152-4	Size 210 SAE 165-4	Size 250 SAE 165-4
AM	193.6 [7.62]	206.6 [8.13]	224.1 [8.82]	242.5 [9.55]	257.7 [10.15]	267.3 [10.52]
EE	145.5 [5.73]	155.5 [6.12]	177.8 [7.0]	197.1 [7.76]	216.9 [8.54]	230.6 [9.08]
EF	161.4 [6.35]	174.4 [6.87]	191.9 [7.56]	210.4 [8.28]	225.6 [8.88]	235.2 [9.26]
EG	158.8 [6.25]	168.8 [6.65]	191.1 [7.52]	210.4 [8.28]	230.2 [9.06]	243.9 [9.60]
EH	184.0 [7.24]	196.9 [7.75]	214.4 [8.44]	232.9 [9.17]	248.1 [9.77]	257.8 [10.15]

DIN B4 HL mounting flange per ISO 3019/2 dimensions, (mm [in])

	Size 060 – DIN 125	Size 080 – DIN 140	Size 110 – DIN 160	Size 160 – DIN 180	Size 210 – DIN 200
AM	193.6 [7.62]	206.6 [8.13]	224.1 [8.82]	242.5 [9.55]	257.7 [10.15]
EE	121.0 [4.76]	131.5 [5.18]	145.3 [5.72]	165.2 [6.50]	184.9 [7.28]
EF	161.4 [6.35]	174.4 [6.87]	191.9 [7.56]	210.4 [8.28]	225.6 [8.88]
EG	134.3 [5.29]	144.8 [5.70]	158.6 [6.24]	178.5 [7.03]	198.2 [7.8]
EH	184.0 [7.24]	196.9 [7.75]	214.4 [8.44]	232.9 [9.17]	248.1 [9.77]

Size 250 is not available.

Cartridge mounting flange dimensions (mm [in])

	Size 060 Cartridge 160	Size 080 Cartridge 190	Size 110 Cartridge 200	Size 160 Cartridge 200
AM	193.6 [7.62]	206.6 [8.13]	224.1 [8.82]	242.5 [9.55]
EE	61.3 [2.41]	53.1 [2.09]	63.3 [2.49]	82.8 [3.26]
EF	161.4 [6.35]	174.4 [6.87]	191.9 [7.56]	210.4 [8.28]
EG	74.6 [2.94]	66.4 [2.61]	76.6 [3.02]	96.1 [3.78]
EH	184.0 [7.24]	196.9 [7.75]	214.4 [8.44]	232.9 [9.17]

Size 210 and 250 are not available.

Control dimensions

Option THHB (Hydraulic two-position control)

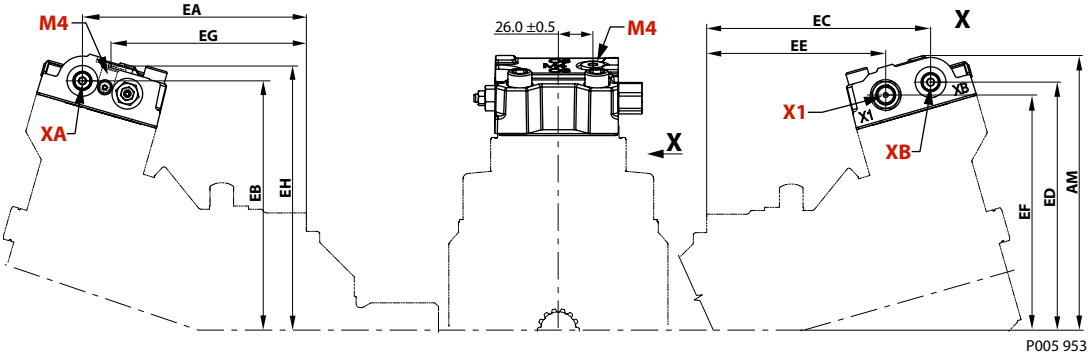

X1	Pilot pressure gauge port ISO 11926-1; 9/16 -18
XA, XB	Pilot pressure BPD port ISO 11926-1 9/16-8
M4	Servo pressure supply gauge port ISO 11926-1; 9/16 -18

SAE mounting flange per ISO 3019/1 dimensions (mm [in])

	Size 060 SAE 127-4	Size 080 SAE 127-4	Size 110 SAE 152-4	Size 160 SAE 152-4	Size 210 SAE 165-4	Size 250 SAE 165-4
AM	193.6 [7.62]	206.6 [8.13]	224.1 [8.82	242.5 [9.55]	257.7 [10.15]	267.3 [10.52]
EA, EC	182 [7.17]	192 [7.56]	214.3 [8.44]	233.6 [9.20]	253.6 [9.98]	267.1 [10.52]
EB, ED	171.9 [6.77]	184.9 [7.28]	202.4 [7.97]	210.4 [8.28]	236 [9.29]	245.7 [9.67]
EE	145.5 [5.73]	155.5 [6.12]	177.8 [7.00]	197.1 [7.76]	216.9 [8.54]	230.6 [9.08]
EF	161.4 [6.35	174.4 [6.87]	191.9 [7.56]	210.4 [8.28]	225.6 [8.88]	235.2 [9.26]
EG	158.8 [6.25]	168.8 [6.65]	191.1 [7.52]	210.4 [8.28]	230.2 [9.06]	243.9 [9.60]
EH	184.0 [7.24]	196.9 [7.75]	214.4 [8.44]	232.9 [9.17]	248.1 [9.77]	257.8 [10.15]

DIN B4 HL mounting flange per ISO 3019/2 dimensions, (mm [in])

	Size 060 – DIN 125	Size 080 – DIN 140	Size 110 – DIN 160	Size 160 – DIN 180	Size 210 – DIN 200
AM	193.6 [7.62]	206.6 [8.13]	224.1 [8.82]	242.5 [9.55]	257.7 [10.15]
EA, EC	157.5 [6.20]	168 [6.61]	181.8 [7.16]	201.7 [7.94]	221.5 [8.72]
EB, ED	171.9 [6.77]	184.9 [7.28]	202.4 [7.97]	210.4 [8.28]	236 [9.29]
EE	121.0 [4.76]	131.5 [5.18]	145.3 [5.72]	165.2 [6.50]	184.9 [7.28]
EF	161.4 [6.35	174.4 [6.87]	191.9 [7.56]	210.4 [8.28]	225.6 [8.88]
EG	134.3 [5.29]	144.8 [5.70]	158.6 [6.24]	178.5 [7.03]	198.2 [7.8]
EH	184.0 [7.24]	196.9 [7.75]	214.4 [8.44]	232.9 [9.17]	248.1 [9.77]

Size 250 is not available.

Cartridge mounting flange dimensions (mm [in])

	Size 060 Cartridge 160	Size 080 Cartridge 190	Size 110 Cartridge 200	Size 160 Cartridge 200
AM	193.6 [7.62]	206.6 [8.13]	224.1 [8.82]	242.5 [9.55]
EA, EC	97.8 [3.85]	89.6 [3.53]	99.8 [3.93]	119.3 [4.70]

Control dimensions

Cartridge mounting flange dimensions (mm [in]) (continued)

	Size 060 Cartridge 160	Size 080 Cartridge 190	Size 110 Cartridge 200	Size 160 Cartridge 200
EB, ED	171.9 [6.77]	184.9 [7.28]	202.4 [7.97]	210.4 [8.28]
EE	61.3 [2.41]	53.1 [2.09]	63.3 [2.49]	82.8 [3.26]
EF	161.4 [6.35]	174.4 [6.87]	191.9 [7.56]	210.4 [8.28]
EG	74.6 [2.94]	66.4 [2.61]	76.6 [3.02]	96.1 [3.78]
EH	184.0 [7.24]	196.9 [7.75]	214.4 [8.44]	232.9 [9.17]

Size 210 and 250 are not available.

Control dimensions

Option TADA (Hydraulic two-position control)

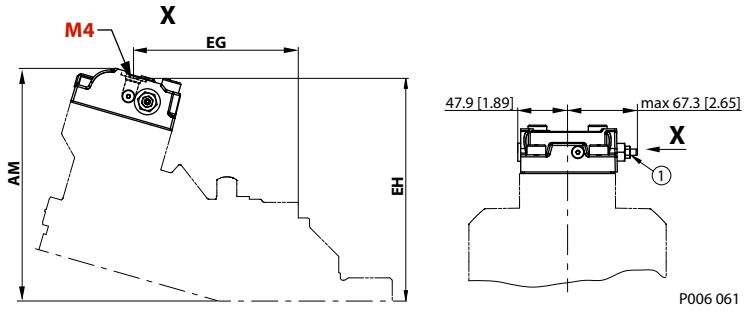

M4 Servo gauge port: ISO 11926-1 9/16 -18UNF-2B or ISO 6149 M14 x 1.5

1 PCOR adjustment

SAE mounting flange per ISO 3019/1 dimensions (mm [in])

	Size 060 SAE 127-4	Size 080 SAE 127-4	Size 110 SAE 152-4	Size 160 SAE 152-4	Size 210 SAE 165-4	Size 250 SAE 165-4
AM	193.6 [7.62]	206.6 [8.13]	224.1 [8.82	242.5 [9.55]	257.7 [10.15]	267.3 [10.52]
EG	158.8 [6.25]	168.8 [6.65]	191.1 [7.52]	210.4 [8.28]	230.2 [9.06]	243.9 [9.60]
EH	184.0 [7.24]	196.9 [7.75]	214.4 [8.44]	232.9 [9.17]	248.1 [9.77]	257.8 [10.15]

DIN B4 HL mounting flange per ISO 3019/2 dimensions, (mm [in])

	Size 060 – DIN 125	Size 080 – DIN 140	Size 110 – DIN 160	Size 160 – DIN 180	Size 210 – DIN 200
AM	193.6 [7.62]	206.6 [8.13]	224.1 [8.82]	242.5 [9.55]	257.7 [10.15]
EG	134.3 [5.29]	144.8 [5.70]	158.6 [6.24]	178.5 [7.03]	198.2 [7.8]
EH	184.0 [7.24]	196.9 [7.75]	214.4 [8.44]	232.9 [9.17]	248.1 [9.77]

Size 250 is not available.

Cartridge mounting flange dimensions (mm [in])

	Size 060 Cartridge 160	Size 080 Cartridge 190	Size 110 Cartridge 200	Size 160 Cartridge 200
AM	193.6 [7.62]	206.6 [8.13]	224.1 [8.82]	242.5 [9.55]
EG	74.6 [2.94]	66.4 [2.61]	76.6 [3.02]	96.1 [3.78]
EH	184.0 [7.24]	196.9 [7.75]	214.4 [8.44]	232.9 [9.17]

Size 210 and 250 are not available.

Control dimensions

Option TAD1 and TAD2 (Hydraulic two-position control)

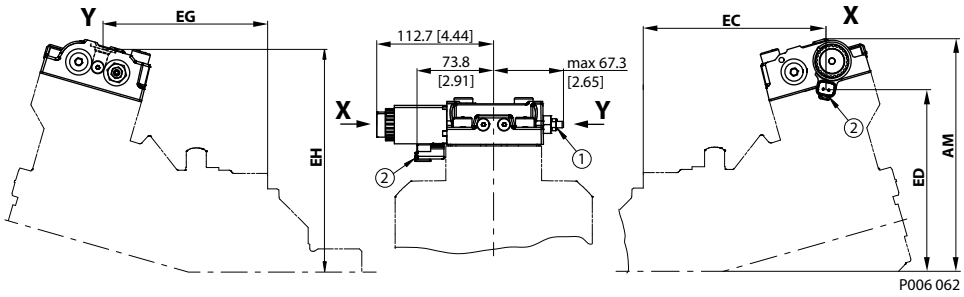

1. PCOR adjustment
2. Electric BPD

SAE mounting flange per ISO 3019/1 dimensions (mm [in])

	Size 060 SAE 127-4	Size 080 SAE 127-4	Size 110 SAE 152-4	Size 160 SAE 152-4	Size 210 SAE 165-4	Size 250 SAE 165-4
AM	193.6 [7.62]	206.6 [8.13]	224.1 [8.82	242.5 [9.55]	257.7 [10.15]	267.3 [10.52]
EC	176.3 [6.94]	186.3 [7.33]	208.6 [8.21]	227.9 [8.97]	246.6 [9.71]	261.0 [10.0]
ED	144.4 [5.69]	157.3 [6.19]	174.9 [6.89]	193.3 [7.61]	208.8 [8.22]	218.0 [8.58]
EG	158.8 [6.25]	168.8 [6.65]	191.1 [7.52]	210.4 [8.28]	230.2 [9.06]	243.9 [9.60]
EH	184.0 [7.24]	196.9 [7.75]	214.4 [8.44]	232.9 [9.17]	248.1 [9.77]	257.8 [10.15]

DIN B4 HL mounting flange per ISO 3019/2 dimensions, (mm [in])

	Size 060 – DIN 125	Size 080 – DIN 140	Size 110 – DIN 160	Size 160 – DIN 180	Size 210 – DIN 200
AM	193.6 [7.62]	206.6 [8.13]	224.1 [8.82]	242.5 [9.55]	257.7 [10.15]
EC	151.8 [5.98]	162.3 [6.39]	176.1 [6.93]	196.0 [7.72]	214.6 [8.45]
ED	144.4 [5.69]	157.3 [6.19]	174.9 [6.89]	193.3 [7.61]	208.8 [8.22]
EG	134.3 [5.29]	144.8 [5.70]	158.6 [6.24]	178.5 [7.03]	198.2 [7.8]
EH	184.0 [7.24]	196.9 [7.75]	214.4 [8.44]	232.9 [9.17]	248.1 [9.77]

Size 250 is not available.

Cartridge mounting flange dimensions (mm [in])

	Size 060 Cartridge 160	Size 080 Cartridge 190	Size 110 Cartridge 200	Size 160 Cartridge 200
AM	193.6 [7.62]	206.6 [8.13]	224.1 [8.82]	242.5 [9.55]
EC	92.1 [3.63]	83.9 [3.30]	94.1 [3.70]	113.6 [4.47]
ED	144.4 [5.69]	157.3 [6.19]	174.9 [6.89]	193.3 [7.61]
EG	74.6 [2.94]	66.4 [2.61]	76.6 [3.02]	96.1 [3.78]
EH	184.0 [7.24]	196.9 [7.75]	214.4 [8.44]	232.9 [9.17]

Size 210 and 250 are not available.