Axial piston fixed motor
A2FE series 6x



- High pressure motor for integration in mechanical gearboxes
- Size 28 ... 355
- Nominal pressure up to 400 bar
- Maximum pressure up 450 bar
- Open and closed circuits
- High pressure motor for integration in mechanical gearboxes
- Open and closed circuits

Features

- Space-saving construction due to recessed mounting flange
- Easy to install, simply slide into the mechanical gearbox
- High power density
- Very high total efficiency
- High starting efficiency
- Optional with integrated pressure relief valve
- Optional with mounted addifitonal valve: counterbalance valve (BVD/BVE), flushing and boost-pressure valve
- Bent-axis design

Inhalt

Type code	2
Technical data	4
Dimensions	10
Extended functions and versions	14
Project planning information	22
Safety Instructions	24
Accessories	24

Type code

01	02	03	04	05		06	07	08		09	10	11	12	13	14	15
	A2F		**E**		**/**	**6**		**W**	**–**	**V**						

Hydraulic fluid

01	Mineral oil and HFD. HFD for sizes 250 to 355 only in combination with long-life bearing “L“ (without code)		
	HFB-, HFC-hydraulic fluid	Sizes 28 to 180 (without code)	
		NG250 bis 355(nur in Verbindung mit Long-Life Lagerung “L“)	**E-**

Axial piston unit

02	Bent-axis design, fixed	**A2F**

Drive shaft bearing

		28-180	**250-355**	
03	Standard bearing (without code)	●	●	
	Long-life bearing	–	●	**L**

Operating mode

04	Motor, plug-in version	**E**

Sizes (NG)[1)]

05	Geometric displacement in cm^3/U								
		28	**32**	**107**	**125**	**160**	**180**	**250**	**355**

Series

06		**6**

Index

07		size 28 to 180	**1**
		size 250 to 355	**0**

Direction of rotation

08	Viewed on drive shaft, bidirectional	**W**

Seal material

09	FKM (fluoroelastomer)	**V**

Drive shaft

		28	**32**	**107**	**125**	**160**	**180**	**250**	**355**	
10	Splined shaft DIN 5480	●	●	●	●	●	●	–	–	**A**
		●	–	●	–	●	–	●	●	**Z**

Mounting flange

			28-180	**250-355**	
11	ISO 3019-2	2-whole	●	–	**L**
		4-whole	–	●	**M**

● = Available ○ = On request – = Not available

1) Sizes 45, 56, 63, 80, 90 see data sheet 91071 (A2FE series 70)

01	02	03	04	05		06	07	08		09	10	11	12	13	14	15
	A2F		**E**		**/**	**6**		**W**	**–**	**V**						

Working ports

					28	32	107	125	160	180	250	355	
12	SAE working ports **A** and **B** at side, opposite		**02**	0	–	–	–	–	–	–	●	–	**020**
				7	–	–	●	●	●	●	●	–	**027**
	SAE working port **A** and **B** bottom (same side)		**10**	0	●	●	●	●	●	●	–	●	**100**
				7	–	–	–	–	–	–	–	●	**107**
	Port plate with pressure relief valves for mounting a counterbalance valve	BVD	**17**	1	–	–	●	●	–	–	–	–	**171** **178**
			18	8	●	●	●	●	●	●	–	–	**181**
		BVE	**18**		–	–	●	●	●	●	–[1]	–	**188**
	Port plate with pressure-relief valves		**19**	1	●	●	●	●	●	●	–	–	**191**
				2	●	●	●	●	●	●	–	–	**192**

Valves

Without valve	**0**
Pressure-relief valve (without pressure boost facility	**1**
Pressure-relief valve (with pressure boost facility)	**2**
Flushing and boost pressure valve, mounted	**7**
Counterbalance valve BVD/BVE mounted[2]	**8**

Speed sensor

		28-32	107-180	250	355[1]	
13	Without speed sensor	●	●	●	●	
	Prepared for DSA speed sensor	●	●	○	–	**U**
	DSA speed sensor mounted[3]	●	●	○	–	**V**

Special version (only sizes 28 to 180)

14	Standard version (without code)	
	Special version for slew drives (standard port plate 19)	**J**

Standard / special version

15	Standard version (without code)	
	Standard version with installation variants, e.g. **T** ports against standard open or closed	**–Y**
	Special version	**–S**

● = Available ○ = On request – = Not available

1) Please contact us.
2) Specify ordering code of counterbalance valve according to data sheet 95522 (BVD) respectively data sheet 95526 (BVE) separately.
3) Specify ordering code of sensor according to data sheet 95133 (DSA) separately.

Notice

- Please note the project planning notes in chapter Project planning notes
- Please note that not all type code combinations are available although the individual functions are marked as being available

Technical data

Table of values

Size				28	32	107	125	160	180	250	355
Displacement geometric, per revolution		V_g	cm^3	28.1	32	106.7	125	160.4	180	250	355
Nominal pressure		p_{nom}	bar	400	400	400	400	400	400	350	350
Maximum pressure		p_{max}	bar	450	450	450	450	450	450	400	400
Maximum speed [1]		n_{nom}	rpm	6300	6300	4000	4000	3600	3600	2700	2240
		n_{max} [2]	rpm	6900	6900	4400	4400	4000	4000		
Inlet flow [3]	at n_{nom}	q_V	l/min	177	202	427	500	577	648	675	795
Torque [4]	at p_{nom}	M	Nm	179	204	679	796	1021	1146	1393	1978
Rotary stiffness		c	kNm/rad	2.93	3.12	11.2	11.9	17.4	18.2	73.1	96.1
Moment of inertia for rotary group		J_{TW}	$kg \cdot m^2$	0.0012	0.0012	0.0116	0.0116	0.022	0.022	0.061	0.102
Maximum angular acceleration		α	rad/s^2	6500	6500	4500	4500	3500	3500	10000	8300
Case volume		V	l	0.2	0.2	0.8	0.8	1.1	1.1	2.5	3.5
Weight (approx.)		m	kg	10.5	10.5	34	36	47	48	82	110

[1] These values are valid at:
- for the optimum viscosity range from v_{opt} = 36 to 16 mm^2/s
- with hydraulic fluid based on mineral oils

[2] Intermittent maximum speed: overspeed for unload and overhauling processest, t < 5 s and Δp < 150 bar

[3] Restriction of input flow with counterbalance valve

[4] Torque without radial force, with radial force see table "Permissible radial and axial forces of the drive shafts"

Note

- The values in the table are theoretical values, without consideration of efficiencies and tolerances. The values are rounded.
- Exceeding the maximum or falling below the minimum permissible values can lead to a loss of function, a reduction in operational service life or total destruction of the axial piston unit. Other permissible limit values, such as speed variation, reduced angular acceleration as a function of the frequency and the permissible angular acceleration at start (lower than the maximum angular acceleration) can be found in data sheet 90261.

Speed range

No limit to minimum speed n_{min}. If uniformity of motion is required, speed n_{min} must not be less than 50 rpm.

Determining the operating characteristics		
Inlet flow	$q_v = \frac{V_g \times n}{1000 \times \eta_v}$	[l/min]
Rotational speed	$n = \frac{q_v \times 1000 \times \eta_v}{V_g}$	[rpm]
Torque	$M = \frac{V_g \times \Delta p \times \eta_{hm}}{20 \times \pi}$	[Nm]
Power	$P = \frac{2 \pi \times M \times n}{60000} = \frac{q_v \times \Delta p \times \eta_t}{600}$	[kW]

Key

V_g	Displacement per revolution [cm^3]
Δp	Differential pressure [bar]
n	Rotational speed [rpm]
η_v	Volumetric efficiency
η_{hm}	Hydraulic-mechanical efficiency
η_t	Total efficiency ($\eta_t = \eta_v \bullet \eta_{hm}$)

Hydraulic fluids

The axial piston unit is designed for operation with mineral oil HLP according to DIN 51524.
Application instructions and requirements for hydraulic fluids should be taken from the following data sheets before the start of project planning:

- 90220: Hydraulic fluids based on mineral oils and related hydrocarbons
- 90221: Environmentally acceptable hydraulic fluids
- 90222: Fire-resistant, water-free hydraulic fluids (HFDR, HFDU)
- 90223: Fire-resistan, water-containing hydraulic fluids (HFAE, HFAS, HFB, HFC)
- 90225: Restricted technical data for operation with fire-resistant hydraulic fluids

Viscosity and temperature of hydraulic fluids

	Viscosity	Shaft seal	Temperature[1]	Comment
Cold start	$v_{max} \leq 1600$ mm²/s	NBR[2]	$\vartheta_{St} \geq -40$ °C	t ≤ 3 min, without load (p ≤ 50 bar), n ≤ 1000 rpm (size 28 to 180), n ≤ 0.25 • n_{nom} (size 250 to 355), permissible temperature difference between axial piston unit and hydraulic fluid max. 25 K
		FKM	$\vartheta_{St} \geq -25$ °C	
Warm-up phase	v = 400 ... 1600 mm²/s			t ≤ 15 min, p ≤ 0.7 • p_{nom} and n ≤ 0.5 • n_{nom}
Continuous operation	v = 10 ... 400 mm²/s[3]	NBR[2]	$\vartheta \leq +78$ °C	measured at port **T**
		FKM	$\vartheta \leq +103$ °C	
	v_{opt} = 16 ... 36 mm²/s			range of optimum operating viscosity and efficiency
Short-term operation	v_{min} = 7 ... 10 mm²/s	NBR[2]	$\vartheta \leq +78$ °C	t ≤ 3 min, p ≤ 0.3 • p_{nom} measured at port **T**
		FKM	$\vartheta \leq +103$ °C	

1) If the specified temperatures cannot be maintained due to extreme operating parameters, please contact us.
2) Special version, please contact us.
3) Equates e.g. with the VG 46 a temperature range of +5 °C to +85 °C (see selection diagram)

Note
To reduce high temperature of the hydraulic fluid in the axial piston unit we recommend the use of a flushing and boost pressure valve (see chapter Extended functions and versions).

Selection of hydraulic fluid
Bosch Rexroth evaluates hydraulic fluids on the basis of the Fluid Rating according to the technical data sheet 90235.
Hydraulic fluids with positive evaluation in the Fluid Rating are provided in the following technical data sheet:

- 90245: Bosch Rexroth Fluid Rating List for Rexroth hydraulic components (pumps and motors)

The hydraulic fluid should be selected so that the operating viscosity in the operating temperature range is within the optimum range (v_{opt}; see selection diagram).

Selection diagram

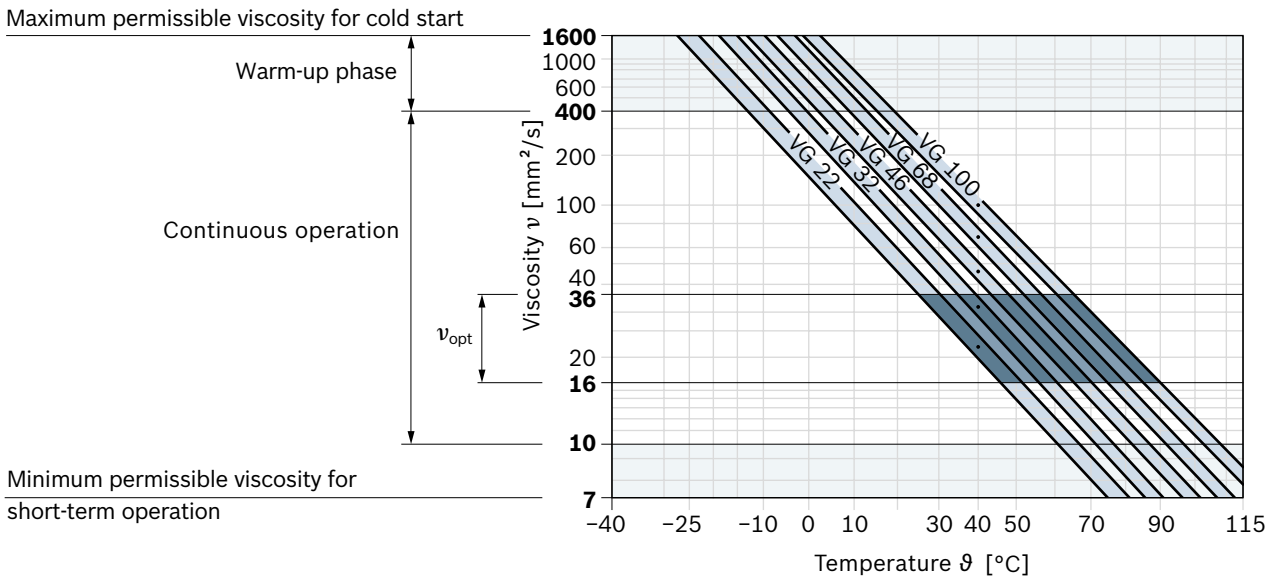

Filtration of the hydraulic fluid

Finer filtration improves the cleanliness level of the hydraulic fluid, which increases the service life of the axial piston unit.

A cleanliness level of at least 20/18/15 is to be maintained according to ISO 4406.

At a hydraulic fluid viscosity of less than 10 mm²/s (e.g. due to high temperatures in short-term operation) at the drain port, a cleanliness level of at least 19/17/14 according to ISO 4406 is required.

For example, the viscosity is 10 mm²/s at:

- HLP 32 a temperature of 73°C
- HLP 46 a temperature of 85°C

Operating pressure range

Pressure at working port A or B (high-pressure side)			**Definition**
Nominal pressure	p_{nom}	see table of values	The nominal pressure corresponds to the maximum design pressure.
Maximum pressure	p_{max}	see table of values	The maximum pressure corresponds to the maximum operating pressure within the single operating period. The sum of the single operating periods must not exceed the total operating period.
Single operating period		10 s	
Total operating period		300 h	
Minimum pressure	$p_{HP\ min}$	25 bar	Minimum pressure on high-pressure side (port **A** or **B**) required to prevent damage to the axial piston unit.
Minimum pressure at inlet (pump operating mode)	$p_{E\ min}$	see diagram	To prevent damage to the axial piston motor in pump mode (change of high-pressure side with unchanged direction of rotation, e.g. when braking),a minimum pressure must be guaranteed at the working port (inlet). The minimum pressure depends on the rotational speed and displacement of the axial piston unit.
Total pressure	p_{Su}	700 bar	The summation pressure is the sum of the pressures at both work ports (**A** and **B**).
Rate of pressure change			**Definition**
with integrated pressure relief valve	$R_{A\ max}$	9000 bar/s	Maximum permissible rate of pressure build-up and reduction during a pressure change over the entire pressure range.
without pressure relief valve	$R_{A\ max}$	16000 bar/s	
Case pressure at port T			**Definition**
Continuous differential pressure	$\Delta p_{T\ cont}$	2 bar	Maximum averaged differential pressure at the shaft seal (case to ambient)
Pressure peaks	$p_{T\ peak}$	10 bar	t < 0.1 s

Note

- Working pressure range valid when using hydraulic fluids based on mineral oils. Values for other hydraulic fluids, please contact us.

Minimum pressure at inlet (pump operating mode)

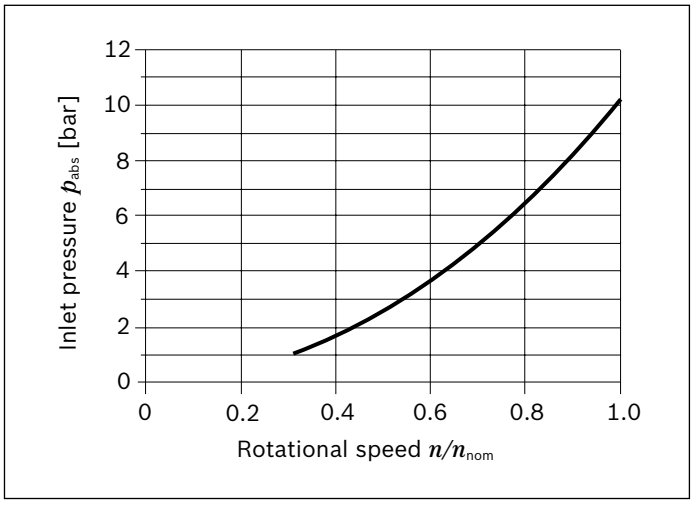

This diagram is only valid for the optimum viscosity range of v_{opt} = 16 to 36 mm²/s.

If the above mentioned conditions cannot be ensured, please contact us.

Pressure definition

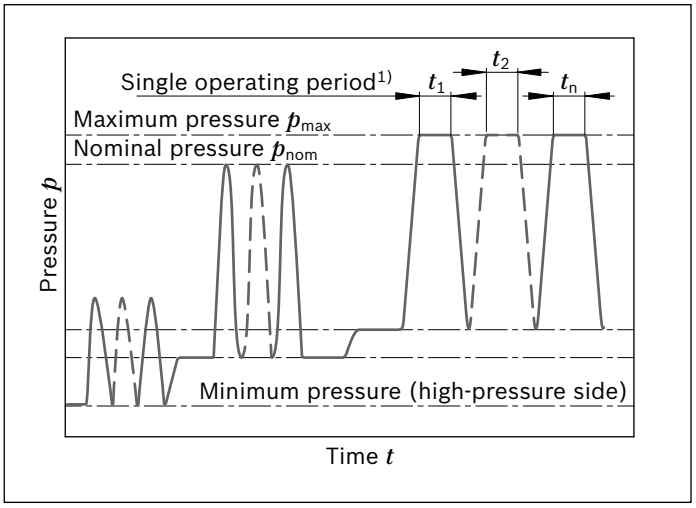

1) Total operating period = $t_1 + t_2 + ... + t_n$

Rate of pressure change

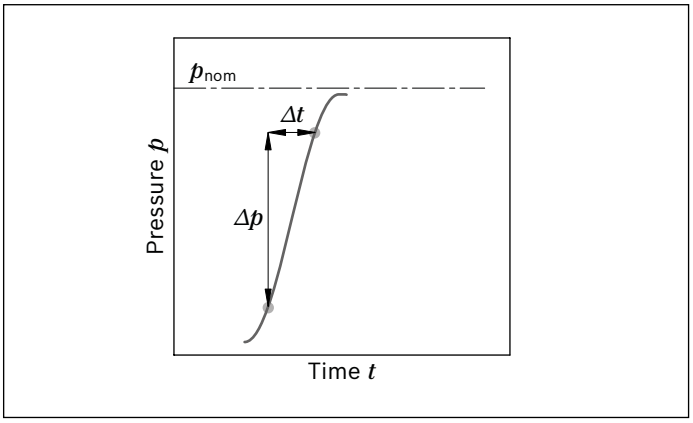

Maximum differential pressure at the shaft seal

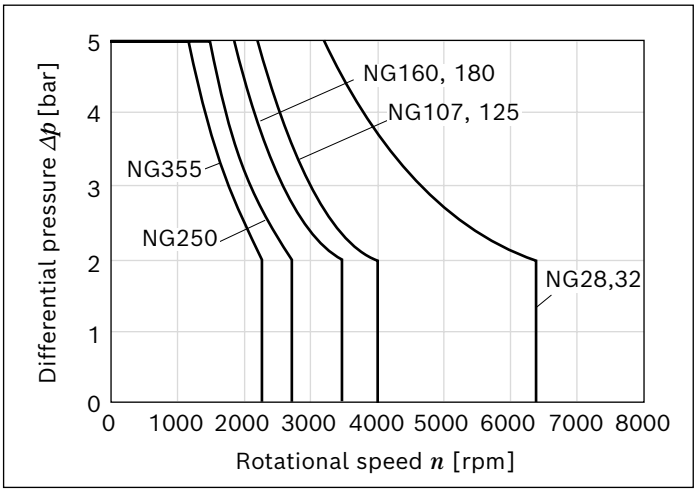

Note

- The service life of the shaft seal is influenced by the speed of the axial piston unit and the case pressure.
- The service life decreases with an increase of the mean differential pressure between the case and the ambient pressure and with a higher frequency of pressure spikes.
- The case pressure must be equal to or higher than the ambient pressure.

Direction of flow

Direction of rotation, viewed on drive shaft	
clockwise	counter-clockwise
A to **B**	**B** to **A**

Permissible radial and axial forces of the drive shaft

Size				28		32	107		125	160		180	250	355
Drive shaft	Code			Z	A	A	Z	A	A	Z	A	A	Z	Z
	Ø		mm	25	30	30	40	45	45	45	50	50	50	60
Maximum radial force at distance a (from shaft collar) 	$F_{q\,max}$		kN	5.7	5.4	5.4	13.6	14.1	14.1	18.1	18.3	18.3	1.2 [1]	1.5 [1]
	a		mm	16	16	16	20	20	20	25	25	25	41	52.5
Permitted torque at $F_{q\,max}$	$T_{q\,max}$		Nm	179	179	204	679	679	796	1021	1021	1146		
Permitted differential pressure at $F_{q\,max}$	$\Delta p_{q\,max}$		bar	400	400	400	400	400	400	400	400	400		
Maximum axial force, when standstill or in non-pressurized conditions 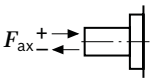	+ $F_{ax\,max}$		N	0	0	0	0	0	0	0	0	0	0	0
	- $F_{ax\,max}$		N	500	500	500	1250	1250	1250	1600	1600	1600	2000	2500
Maximum axial force, per bar operating pressure	+ $F_{ax\,max}$		N/bar	5.2	5.2	5.2	12.9	12.9	12.9	16.7	16.7	16.7		

[1] When at a standstill or when axial piston unit operating in non-pressurized conditions.
Higher forces are permissible when under pressure, please contact us.

General instructions

- The values given are maximum values and do not apply to continuous operation.
- The axial force in direction $-F_{ax}$ is to be avoided as the service life of the bearing is reduced.
- Special requirements apply in the case of belt drives. Please contact us.

Notes for sizes 250 ... 355:

- In case of radial forces limited performance data is valid. Please contact us.
- In case of axial forces during operation of the unit please contact us.

Effect of radial force F_q on the service life of bearings

By selecting a suitable direction of radial force F_q the load on the bearings caused by the internal rotary group forces can be reduced, thus optimizing the service life of the bearings. Recommended position of mating gear is dependent on direction of rotation. Examples:

Toothed gear drive, size 28 ... 180

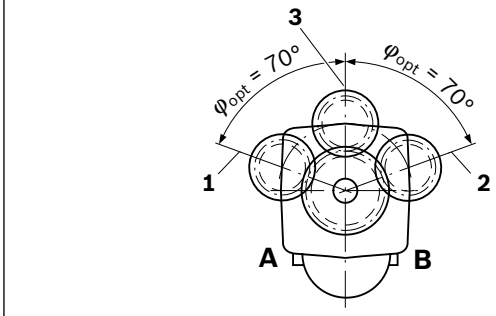

Toothed gear drive, size 250 ... 355

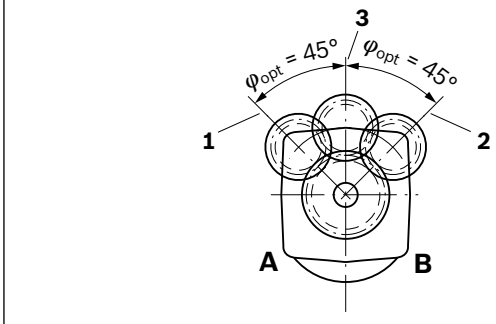

1 Direction of rotation "counter-clockwise", pressure at port **B**

2 Direction of rotation "clockwise", pressure at port **A**

3 Direction of rotation "bidirectional"

Long-Life bearing

Sizes 250 and 355

For long service life and use with HF hydraulic fluids. Identical external dimensions as version with standard bearings. Subsequent conversion to long-life bearings is possible.

Dimensions

Size 28 ... 180

Port plate 10

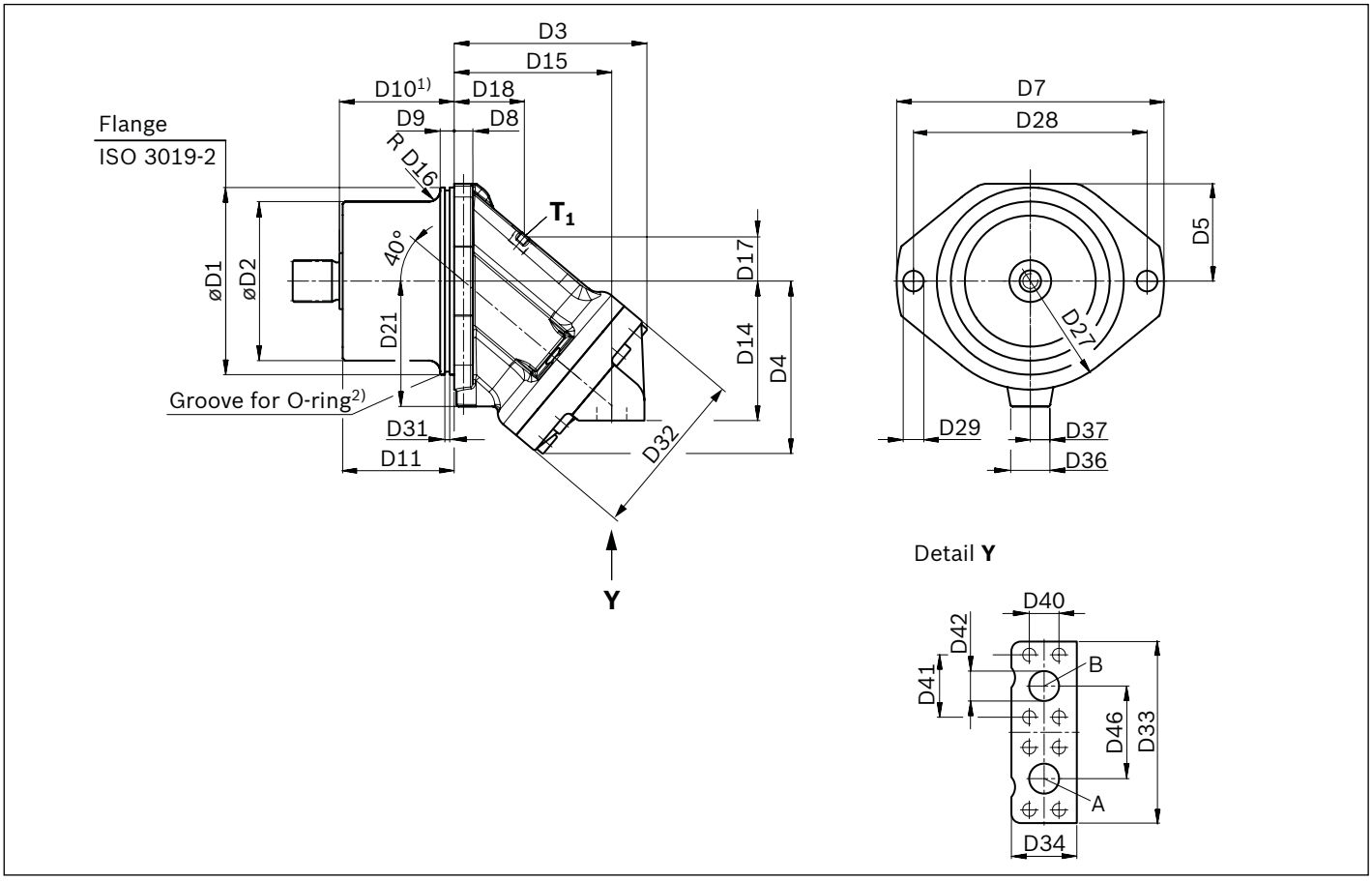

[1)] To shaft collar
[2)] The O-ring is not included in the delivery contents.

Size	D1	D2	D3	D4	D5	D7	D8	D9	D10	D11	D14	D15	D16	D17	D18	D21	D27	D28	D29
	mm	mm	mm	mm	mm	mm	mm	mm	mm	mm	mm	mm	mm	mm	mm	mm	mm	mm	mm
28, 32	135 $^{0}_{-0.025}$	94	114	106	71	188	16	15	88.8	87.1	91	94	10	27	45	95	154	160	14
107, 125	200 $^{0}_{-0.029}$	152.3	178	157	103	286	20	15	122.8	119	136	143	16	41	58	135	232	250	22
160, 180	200 $^{0}_{-0.029}$	171.6	206	185	104	286	20	15	122.8	119.3	149	169	12	47	75	134	232	250	22

Size	D31	D32	D33	D34	D36	D37	D40	D41	D42	D46	O-Ring
	mm	mm	mm	mm	mm	mm	mm	mm	mm	mm	mm
28, 32	5.2	106	115	40	42	13	18.2	40.5	13	59	Ø126 × 4
125, 107	5.2	150	194	70	40	0	31.8	66.7	32	99	Ø192 × 4
160, 180	5.2	180	194	70	42	0	31.8	66.7	32	99	Ø192 × 4

Note

- The dimensional drawings of the port plates with valves can be found in the chapter "Extended functions and versions".

Drive shafts Z and A

Splined shaft DIN 5480

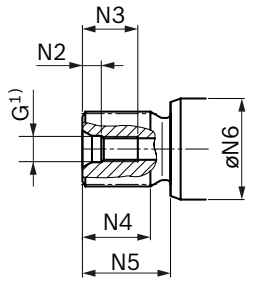

1) Center bore according to DIN 332 (thread according to DIN 13)

Splined shaft DIN 5480

NG	Code	Designation	Thread G	N2	N3	N4	N5	ØN6
				mm	mm	mm	mm	mm
28	Z	W25×1.25×18×9g	M8 × 1.25	6	19	28	43	35
	A	W30×2×14×9g	M10 × 1.5	7.5	22	27	35	35
32	A	W30×2×14×9g	M10 × 1.5	7.5	22	27	35	35
107	Z	W40×2×18×9g	M12 × 1.75	9.5	28	37	45	50
	A	W45×2×21×9g	M16 × 2	12	36	42	50	50
125	A	W45×2×21×9g	M16 × 2	12	36	42	50	50
160	Z	W45×2×21×9g	M16 × 2	12	36	42	50	60
	A	W50×2×24×9g	M16 × 2	12	36	44	55	60
180	A	W50×2×24×9g	M16 × 2	12	36	44	55	60

Ports

Size			28	32	107	125	160	180
A, B	Working port	Size	1/2 in		1 1/4 in			
		Standard	Dimensions according to SAE J518					
		Fastening thread 1)	M8 × 125; 15 mm deep		M14 × 2; 19 mm deep			
		State on delivery	With protective cover (must be connected)					
T_1	Drain port	Size	M16 × 15; 12 mm deep		M18 × 15; 12 mm deep		M22 × 15; 14 mm deep	
		Standard 2)	DIN 3852					
		State on delivery 3)	Plugged (observe installation instructions)					

1) Thread according to DIN 13
2) The spot face can be deeper than specified in the appropriate standard.
3) Unless otherwise specified. Other layouts on request.

Size 250

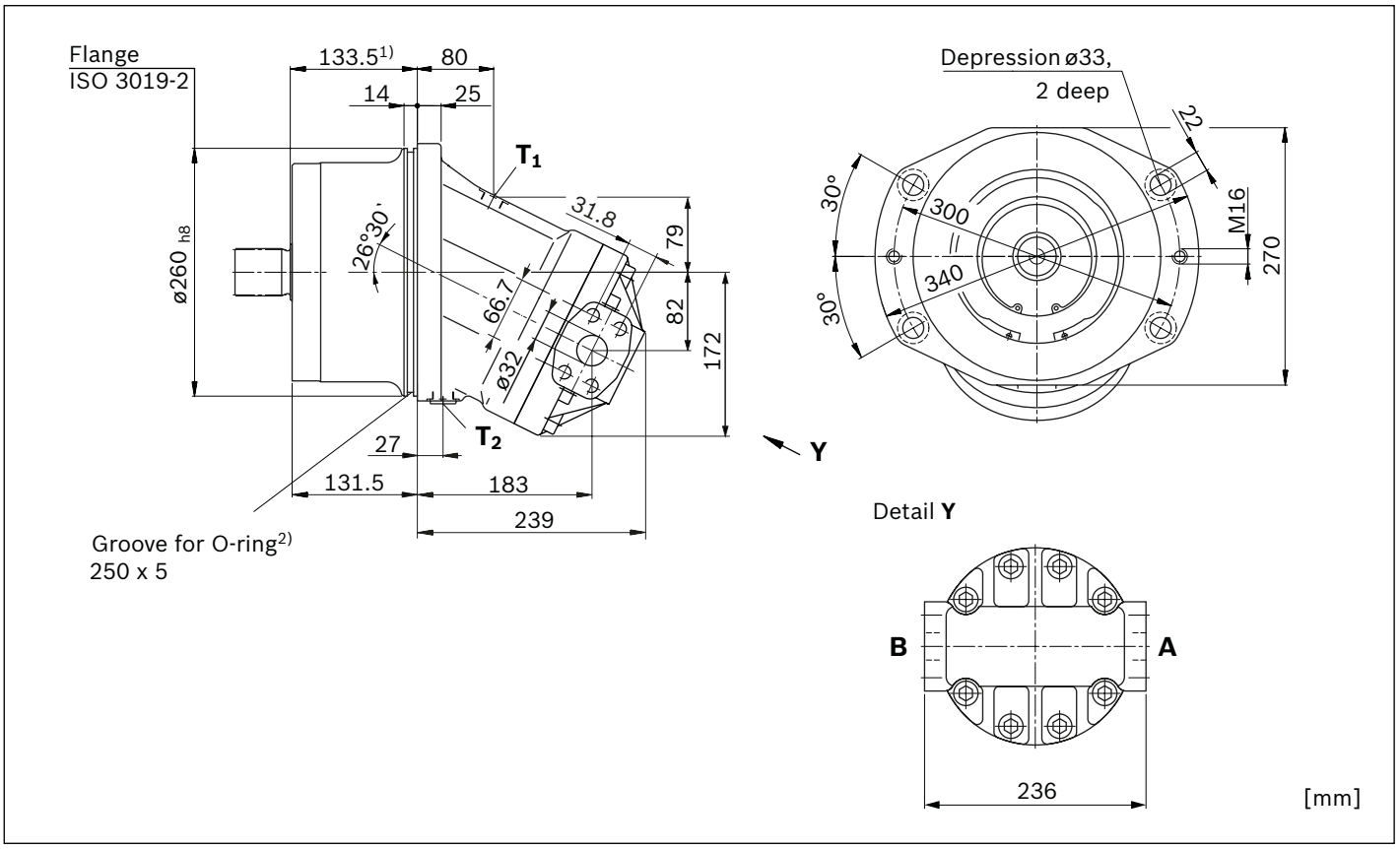

1) To shaft collar
2) The O-ring is not included in the delivery contents.

Z Splined shaft DIN 5480
W50x2x24x9g

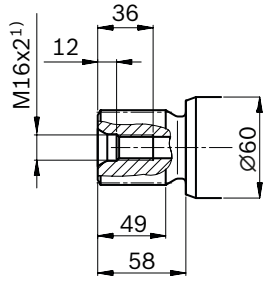

1) Center bore according to DIN 332 (thread according to DIN 13)

Ports

Size			250
A, B	Working port	Size	1 1/4 in
		Standard	Dimensions according to SAE J518
		Fastening thread [1)]	M14 × 2; 19 mm deep
		State on delivery	With protective cover (must be connected)
T_1	Drain port	Size	M22 × 15; 14 mm deep
		Standard [2)]	DIN 3852
		State on delivery [3)]	With protective cover (observe installation instructions)
T_2	Drain port	Size	M22 × 15; 14 mm deep
		Standard [2)]	DIN 3852
		State on delivery [3)]	Plugged (observe installation instructions)

1) Thread according to DIN 13
2) The spot face can be deeper than specified in the appropriate standard.
3) Unless otherwise specified. Other layouts on request.

Size 355

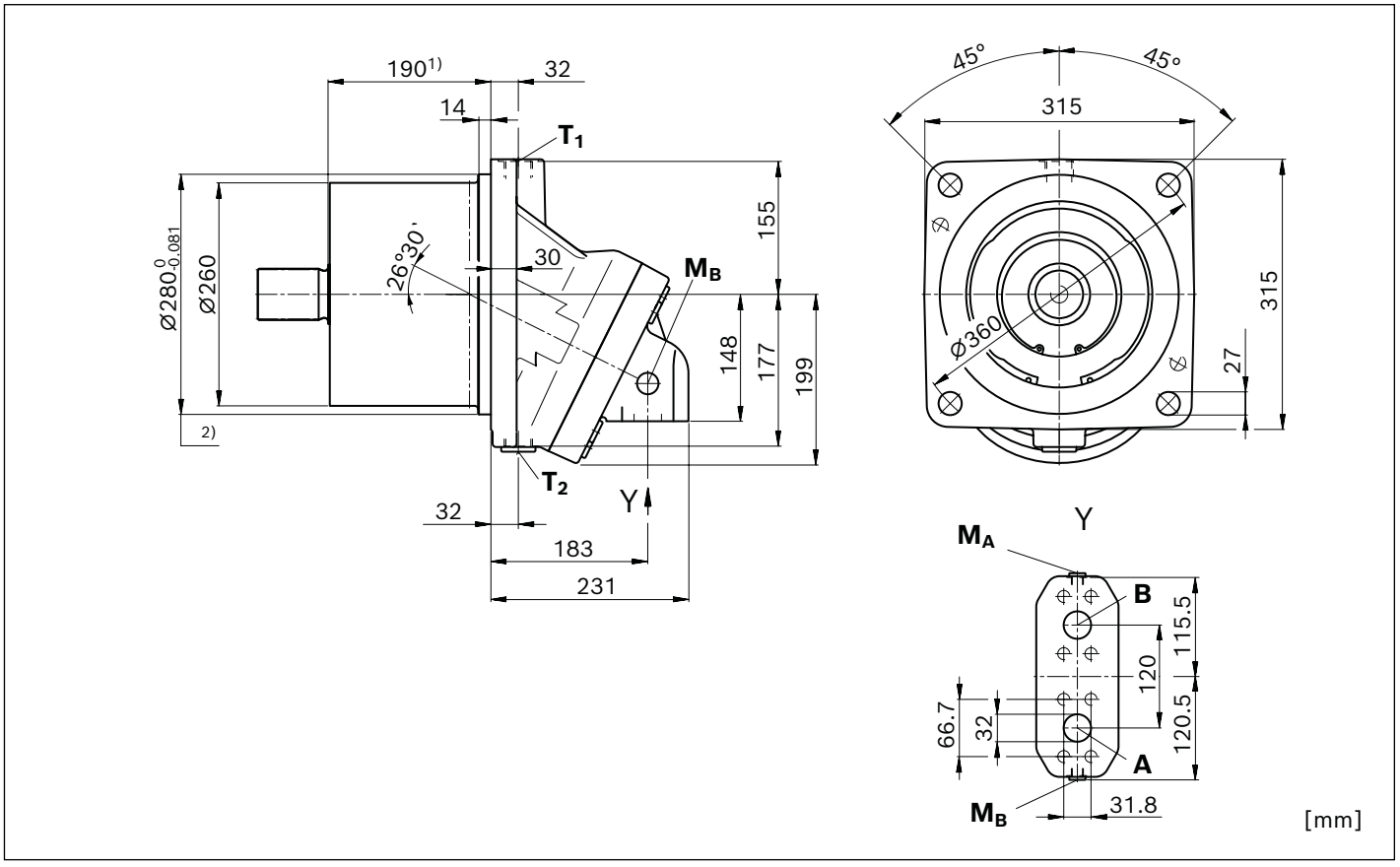

1) To shaft collar
2) Flange ISO 3019-2

Z Splined shaft DIN 5480
W60x2x28x9g

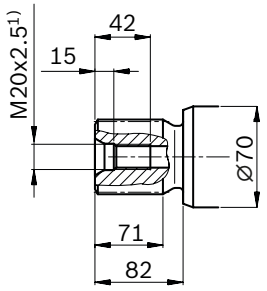

1) Center bore according to DIN 332 (thread according to DIN 13)

Ports

Size			355
A, B	Working port	Size	1 1/4 in
		Standard	Dimensions according to SAE J518
		Fastening thread [1)]	M14 × 2; 22 mm deep
		State on delivery	With protective cover (must be connected)
T_1	Drain port	Size	M33 × 2; 18 mm deep
		Standard [2)]	DIN 3852
		State on delivery [3)]	With protective cover (observe installation instructions)
T_2	Drain port	Size	M33 × 2; 18 mm deep
		Standard [2)]	DIN 3852
		State on delivery [3)]	Plugged (observe installation instructions)
M_A, M_B	Measuring port pressure A, B	Size	M14 × 15; 12 mm deep
		Standard [2)]	DIN 3852
		State on delivery	Plugged

1) Thread according to DIN 13
2) The spot face can be deeper than specified in the appropriate standard.
3) Unless otherwise specified. Other layouts on request.

Extended functions and versions

Flushing and boost pressure valve

The flushing and boost pressure valve is used in closed circuits for the removal of heat and to ensure a minimum boost pressure level.
Hydraulic fluid is directed from the respective low pressure side into the motor housing. This is then fed into the reservoir, together with the leakage. The removed hydraulic fluid must be replaced by cooled hydraulic fluid from the boost pump.

Cracking pressure of pressure retaining valve
(observe when setting the primary valve)
Sizes 107 to 355, fixed setting: 16 bar

Switching pressure of flushing piston Δp
Sizes 107 to 355: 8±1 bar

Flushing flow q_v
Orifices (throttles with integrated valve) can be used to set the flushing flows as required.
The specifications below are based on:
$\Delta p_{ND} = p_{ND} - p_G = 25$ bar and $v = 10$ mm²/s
(p_{ND} = low pressure, p_G = case pressure)

Flushing and boost-pressure valve attached (port plates 027 and 017)

Size	Flushing flow q_v	Orifice-Ø	Material number of orifice
	l/min	mm	
107, 125	8	1.8	R909419696
160, 180	10	2	R909419697
250			
355	16	2.5	R910803019

With sizes 107 to 180, orifices can be supplied for flushing flows from 8 to 10 l/min. For flushing flows deviating from the values in the table, please state the required flushing flow when ordering. For nominal sizes 250 to 355, please always specify the flushing flow. For sizes 107 to 180 the flushing flow without orifice is approx. 12 to 14 l/min at low pressure $\Delta p_{ND} = 25$ bar, for sizes 250 to 355 please contact us.

Circuit diagram

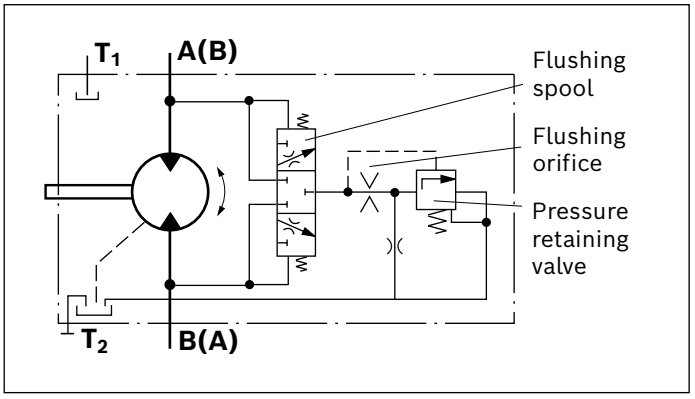

Dimensions

Port plate 027

SAE working ports at side, opposite

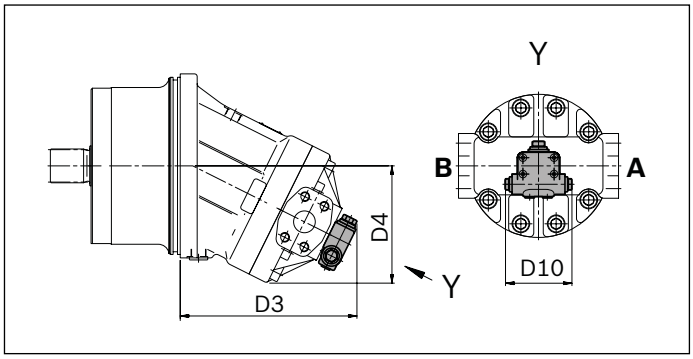

Size	D3	D4	D10
	mm	mm	mm
107, 125	211	192	102
160, 180	232	201	102
250	260.5	172	102

Port plate 107

SAE working ports at bottom

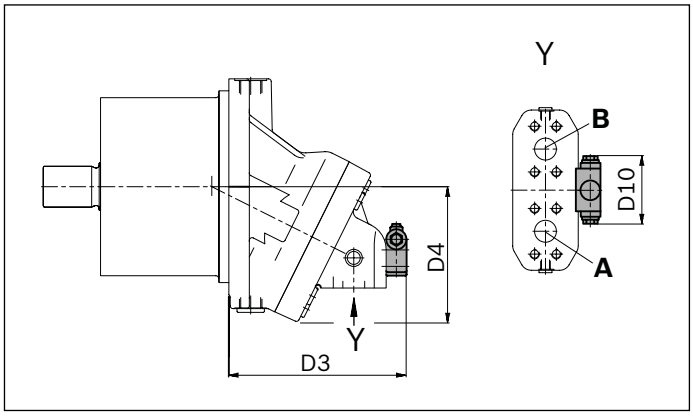

Size	D3	D4	D10
	mm	mm	mm
355	260	199	102

Pressure relief valve

The MHDB pressure relief valves protect the hydraulic motor from overload. As soon as the set cracking pressure is reached, the hydraulic fluid flows from the high-pressure side to the low-pressure side.
The pressure relief valves are only available in conjunction with connection plates 181, 191 or 192 (port plate 181: see section “BVD and BVE counterbalance valve”).

Setting range of cracking pressure: 50 up to 420 bar

For versions “with pressure sequencing stage” (code 192), a higher pressure setting can be implemented by connecting an external pilot pressure of 25 up to 30 bar at port $\mathbf{P}_{St}$.
When ordering, state in plain text:

- Cracking pressure of pressure relief valve
- Cracking pressure with pilot pressure applied to $\mathbf{P}_{St}$ (only with version 192)

Version without pressure boost facility (code 191)

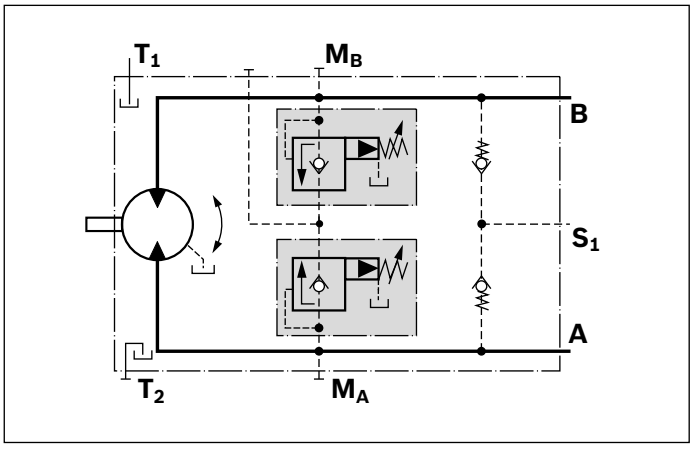

Version with pressure boost facility (code 192)

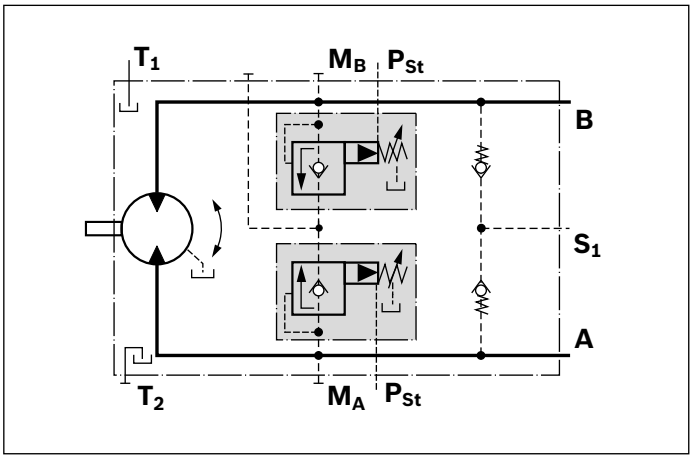

Permissible input flow or pressure in case of port plate with pressure-relief valves

Size		Code	p_{nom}	p_{max}	q_V
Motor	MHDB		bar	bar	l/min
28 ... 32	16	191, 192	350	420	100
107 ... 180	32				400

Dimensions

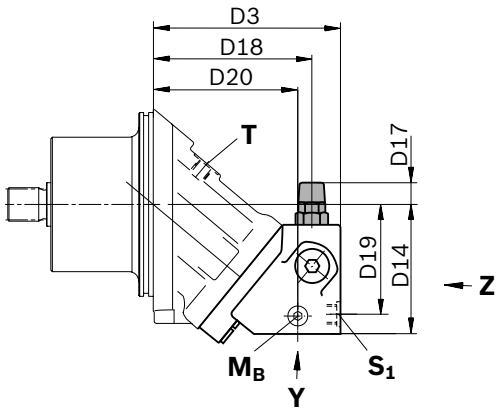

Detailed view **Z**:
Version without pressure boost facility (code 191)

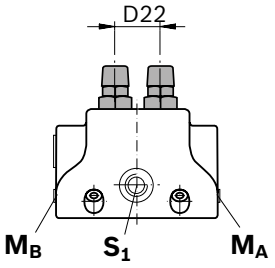

Detailed view **Y**

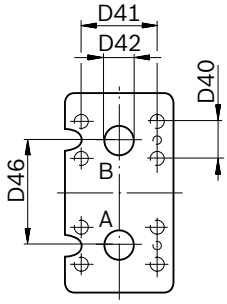

Detailed view **Z**:
Version with pressure boost facility (code 192)

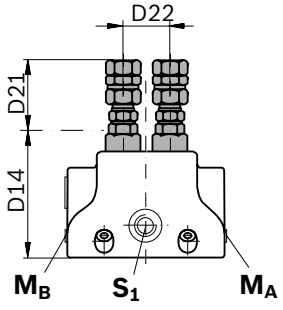

Size		D3	D14	D17	D18	D19	D20	D21	D22	D40	D41	D42	D46
Motor	**MHDB**	**mm**	**mm**	**mm**	**mm**	**mm**	**mm**	**mm**	**mm**	**mm**	**mm**	**mm**	**mm**
28, 32	16	145	102	25	122	87	110	68	36	23.8	50.8	19	66
107, 125	32	216	149.5	10	184	130	168	52	53	31.8	66.7	32	84
160, 180		249	170	5	218	149	202	47	53	31.8	66.7	32	84

Ports

Size			28, 32	107, 125	160, 180
A, B	Working port	Size	3/4 in	1 1/4 in	
		Standard	Dimensions according to SAE J518		
		Fastening thread [1]	M10 × 15; 17 mm deep	M14 × 2; 19 mm deep	
		State on delivery	With protective cover (must be connected)		
S_1	Boost port	Size	M22 × 15; 14 mm deep	M26 × 15; 16 mm deep	
		Standard	DIN 3852		
		State on delivery	With protective cover (must be connected)		
P_{St}	Pilot pressure port	Size	G 1/4 [2]		
		Standard	DIN ISO 228		
M_A, M_B	Measuring port pressure A, B	Size	M20 × 15; 14 mm deep	M26 × 15; 16 mm deep	M30 × 15; 16 mm deep
		Standard [3]	DIN 3852		
		State on delivery	Plugged		

[1] Thread according to DIN 13
[2] Only with port plate 192
[3] The spot face can be deeper than specified in the appropriate standard.

Counterbalance valve BVD and BVE

Function

Travel drive/winch counterbalance valves are designed to reduce the danger of overspeeding and cavitation of axial piston motors in open circuits. Cavitation occurs if the motor speed is greater than it should be for the given input flow while braking, travelling downhill, or lowering a load.

If the inlet pressure drops, the counterbalance spool throttles the return flow and brakes the motor until the inlet pressure returns to approx. 20 bar.

Note

- BVD available for sizes 28 to 180 and BVE available for sizes 107 to 180.
- The counterbalance valve must be ordered additionally. We recommend ordering the counterbalance valve and the motor as a set. Ordering example: A2FM(E)107/61W–VAB**188** + BVD20F27S/41B–V03K16D0400S12
- The counterbalance valve does not replace the mechanical service brake and park brake.
- Observe the detailed notes on the BVD counterbalance valve in data sheet 95522 and BVE counterbalance valve in data sheet 95526!
- For the design of the brake release valve, we must know for the mechanical park brake:
  - the pressure at the start of opening
  - the volume of the counterbalance spool between minimum stroke (brake closed) and maximum stroke (brake released with 21 bar)
  - the required closing time for a warm device (oil viscosity approx. 16 mm^2/s)

Travel drive counterbalance valve BVD...F

Application option:

- Travel drive on wheeled excavators

Example schematic for travel drive on wheeled excavators

A2FM(E)107/61W-VAB188 + BVD20F27S/41B–V03K16D0400S12

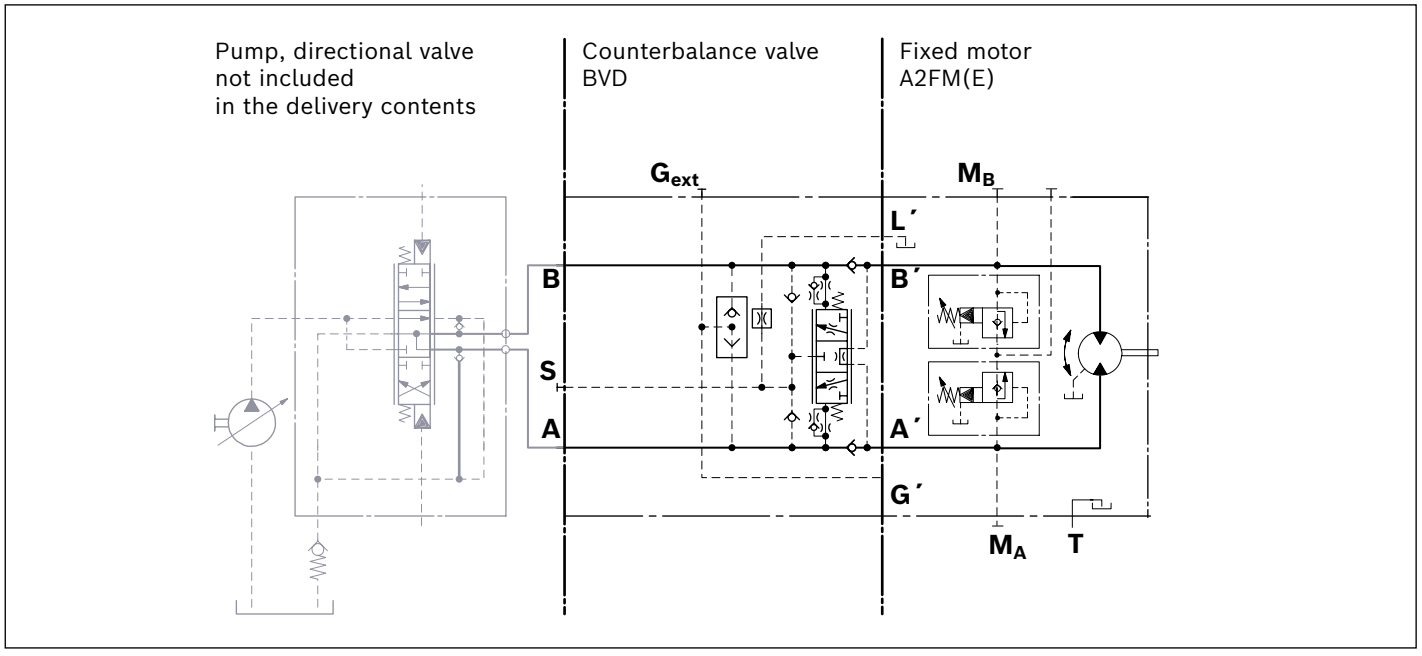

Winch counterbalance valve BVD...W and BVE

Application options:

- Winch drive in cranes (BVD and BVE)
- Track drive in excavator crawlers (BVD)

Example circuit diagram for winch drive in cranes

A2FM(E)107/61W-VAB188 + BVE25W385/51ND-V100K00D4599T30S00-0

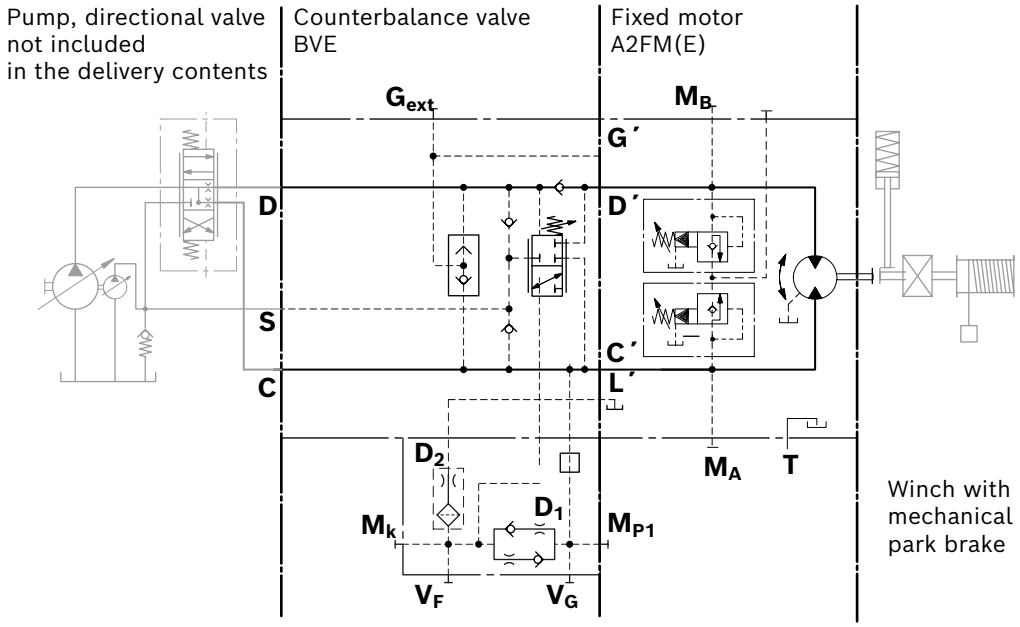

Permissible input flow or pressure in case of port plate with counterbalance valves

Size			Code	p_{nom}	p_{max}	q_V
Motor	**BVD/ BVE**	**MHDB**		**bar**	**bar**	**l/min**
28 ... 32	20	16	181, 188	350	420	100
107 ... 125		22	171, 178			220
107 ... 180	25	32	181, 188			320

Dimensions

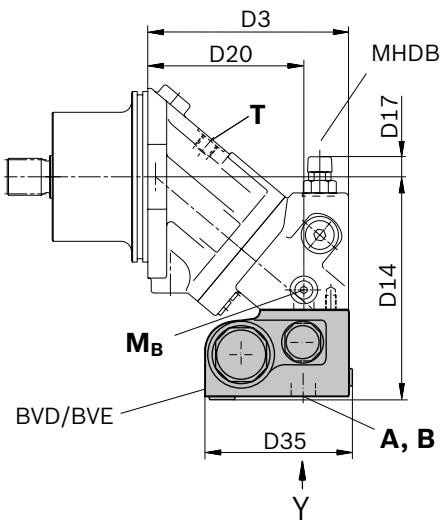

Detailed view **Y**:
with BVD/BVE (code 178, 188)

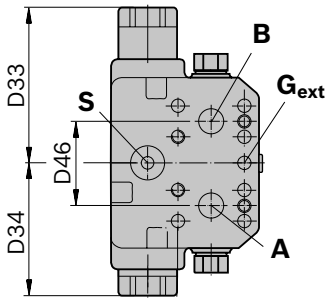

Detailed view **Y**:
without BVD/BVE (code 171, 181)

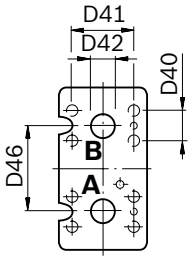

Size		Code	D3	D14	D17	D20	D33	D34	D35 [1]	D40	D41	D42	D46
Motor	**Counterbalance valve**		mm	mm	mm	mm	mm	mm	mm	mm	mm	mm	mm
28, 32	BVD20..16	188	145	175	25	110	139	98	142	23.8	50.8	19	66
107, 125	BVD20..28	178	216	238	10	168	139	98	142	27.8	57.2	25	84
	BVD25..38	188	216	239	10	168	175	120.5	158	31.8	66.7	32	84
	BVE25..38	188	216	240	10	168	214	137	167	31.8	66.7	32	84
160, 180	BVD25..38	188	249	260	5	202	175	120.5	158	31.8	66.7	32	84
	BVE25..38	188	249	260	5	202	214	137	167	31.8	66.7	32	84

[1] For version with brake release valve (BV...L): Dimension D35 +5 mm

Ports

Size			28, 32	107, 125		160, 180
A, B	Working port	Size	3/4 in	1 in [1]	1 1/4 in [2]	1 1/4 in
		Standard	Dimensions according to SAE J518			
		Fastening thread [3]	M10 × 15; 17 mm deep	M12 × 175; 16 mm deep	M14 × 2; 19 mm deep	
		State on delivery	With protective cover (must be connected)			
S	Boost port	Size	M22 × 15; 14 mm deep		M27 × 2; 16 mm deep	
		Standard [4]	DIN 3852			
		State on delivery	Plugged			
B_r	Brake release port (only BV...L)	Size	M12 × 1.5			
		Standard [4]	DIN 3852			
		State on delivery	With protective cover (must be connected)			
G_{ext}	Brake release port (only BV...S)	Size	M12 × 1.5			
		Standard [4]	DIN 3852			
		State on delivery	Plugged			
M_A, M_B	Measuring port pressure A, B	Size	M12 × 15; 12 mm deep			
		Standard [4]	ISO 6149			
		State on delivery	Plugged			

[1] With BVD20
[2] With BVD25 / BVE25
[3] Thread according to DIN 13
[4] The spot face can be deeper than specified in the appropriate standard.

Speed sensors

The versions A2FE...U ("prepared for speed sensor", i.e. without sensor) are equipped with a toothed ring on the rotary group.
On deliveries "prepared for speed sensor", the port is plugged with a pressure-resistant cover.
With the DSA speed sensor mounted a signal proportional to motor speed can be generated. The sensors measures the speed and direction of rotation.
Ordering code, technical data, dimensions and details on the connector, plus safety information about the sensor can be found in the relevant data sheet.

DSA: data sheet 95133

The sensor is mounted at the specially provided port as follows:
DSA: with one mounting bolt

We recommend ordering the A2FE plug-in motor complete with sensor mounted.

DSA speed sensor mounted (code V)
Size 28 ... 250

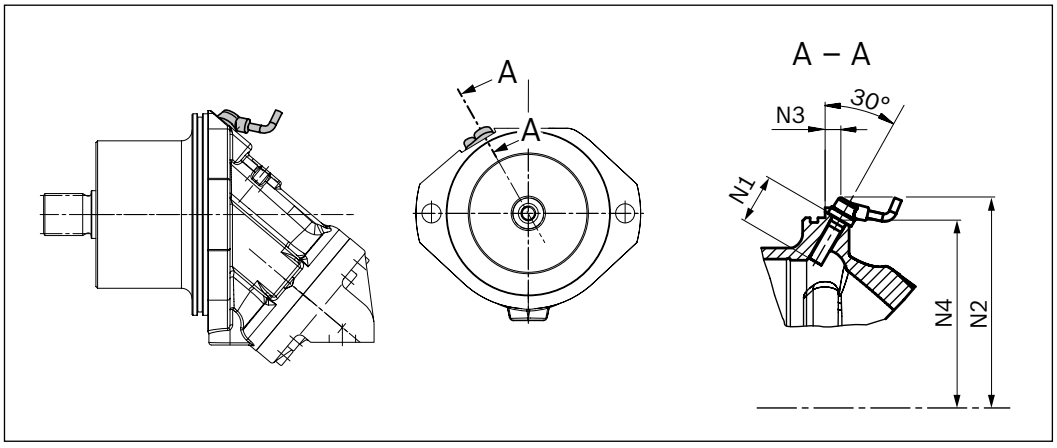

Motor	Number of teeth	N1	N2	N3	N4
Size		mm	mm	mm	mm
28 ... 32	38	32	86	15	66
107 ... 125	59	32	104	28	85
160 ... 180	67	32	114	33	95
250	78_{-1}	32			

Project planning information

Installation instructions

General

- During commissioning and operation, the axial piston unit must be filled with hydraulic fluid and air bled. This must also be observed following a relatively long standstill as the axial piston unit may drain back to the reservoir via the hydraulic lines.
- The case drain fluid in the housing must be directed to the reservoir via the highest available drain port (**T_1,T_2**).
- If a shared drain line is used for several units, make sure that the respective case pressure is not exceeded. The shared drain line must be dimensioned to ensure that the maximum permissible case pressure of all connected units is not exceeded in any operating conditions, specifically on cold start. If this is not possible, separate reservoir lines must be laid as required.
- To achieve favorable noise values, all connecting lines should be decoupled by using elastic elements and above-reservoir installation is to be avoided.
- In all operating conditions, the drain line must flow into the reservoir below the minimum fluid level.

Installation position

See the following examples **1** to **6**.
Further installation positions are possible upon request.
Recommended installation position: **1** and **2**.

Below-tank installation (standard)

Below-tank installation is at hand if the axial piston unit is installed below the minimum liquid level outside the tank.

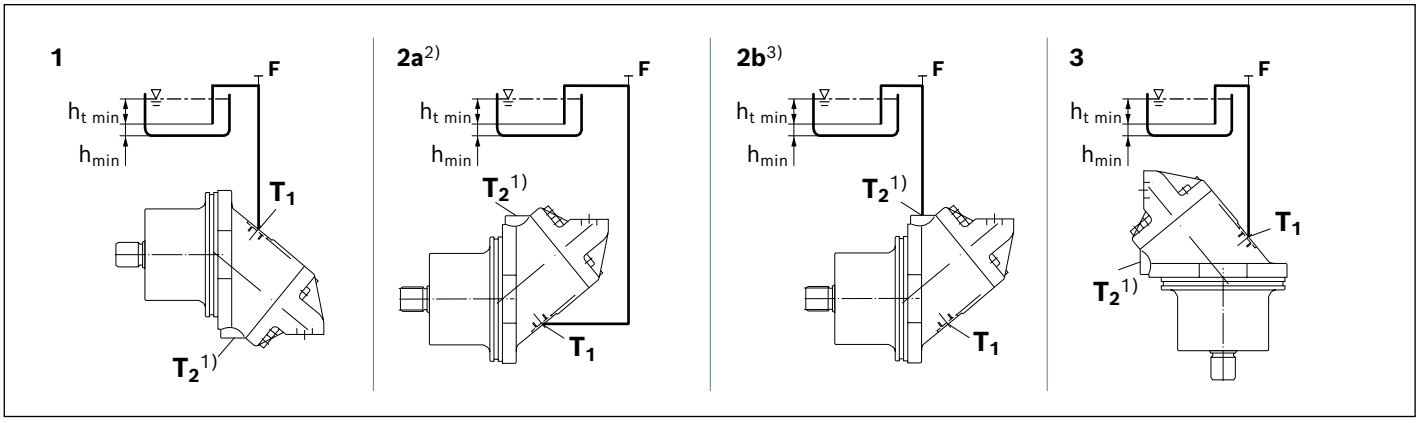

1) Standard for sizes 250 and 355, special version for sizes 28 to 180.
2) Piping suggestion without port T_2 (sizes 28 to 180)
3) Piping suggestion with Port T_2 (sizes 250 to 355).

Installation position	Air bleeding	Filling
1	**F**	**T_1**
2a	**F**	**T_1**
2b	**F**	**T_2**
3	**F**	**T_1**

Above-reservoir installation

Above-reservoir installation means that the axial piston unit is installed above the minimum fluid level of the reservoir.

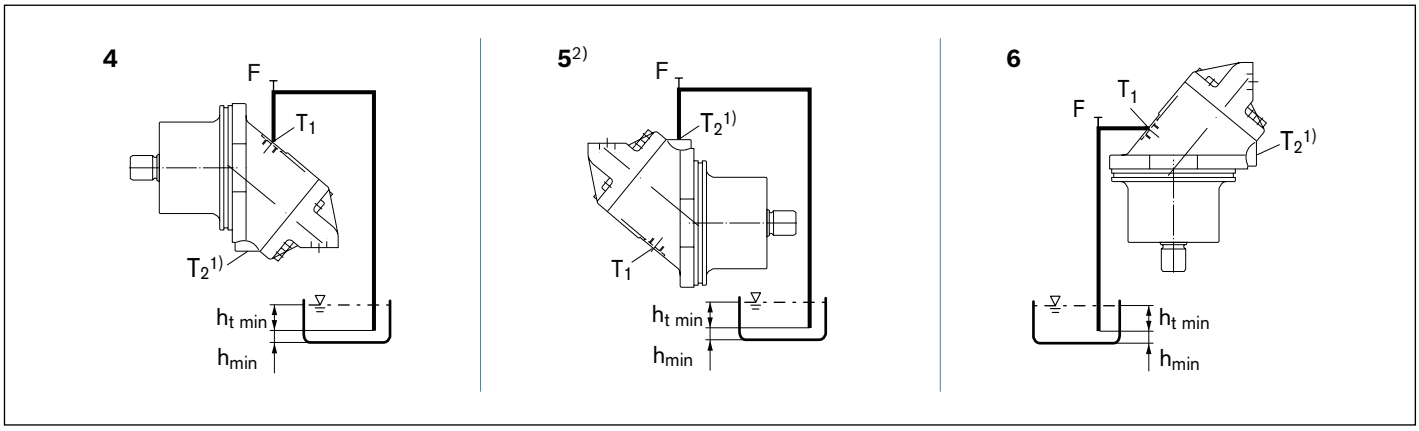

1) Standard for sizes 250 and 355, special version for sizes 28 to 180.

2) Installation position only permissible if port T_2 is fitted (sizes 250 and 355).

Installation position	Air bleeding	Filling
4	**F**	**T_1 (F)**
5	**F**	**T_2 (F)**
6	**F**	**T_1 (F)**

Key

F	Filling / Air bleeding
T_1, T_2	Drain port
$h_{t\ min}$	Minimum required immersion depth (200 mm)
h_{min}	Minimum required spacing to reservoir bottom (100 mm)

Note: Connection **F** is part of the external piping and must be provided on the customer side to simplify the filling and bleeding.

General project planning notes

- The axial piston motor is designed to be used in open and closed circuits.
- The project planning, installation and commissioning of the axial piston unit require the involvement of qualified skilled personnel.
- Before using the axial piston unit, please read the corresponding instruction manual completely and thoroughly. If necessary, request it from Bosch Rexroth.
- Before finalizing your design, request a binding installation drawing.
- The specified datas and notes must be observed.
- Preservation: Our axial piston units are supplied as standard with preservative protection for a maximum of 12 months. If longer preservative protection is required (maximum 24 months), please specify this in plain text when placing your order. The preservation times are valid under optimal storage conditions. Details of these conditions can be found in the data sheet 90312 or the instruction manual.
- Not all versions of the product are approved for use in a safety function according to ISO 13849. Please consult the responsible contact person at Bosch Rexroth if you require reliability parameters (e.g. $MTTF_D$) for functional safety.
- A pressure relief valve is to be provided in the hydraulic system.
- Observe the instructions in the instruction manual regarding tightening torques of connection threads and other threaded joints used.
- The notes in the instruction manual on tightening torques of the port threads and other screw joints must be observed.
- The ports and fastening threads are designed for the permissible maximum pressure p_{max} (see instruction manual). The machine or system manufacturer must ensure that the connecting elements and lines correspond to the specified operating conditions (pressure, flow, hydraulic fluid, temperature) with the necessary safety factors.
- The working ports and function ports are designated only to accommodate hydraulic lines.

Safety Instructions

- During and shortly after operation, there is a risk of getting burnt on the axial piston unit and especially on the solenoids. Take the appropriate safety measures (e.g. by wearing protective clothing).
- Moving parts in control equipment (e.g. valve spools) can, under certain circumstances, get stuck in position as a result of contamination (e.g. contaminated hydraulic fluid, abrasion, or residual dirt from components). As a result, the hydraulic fluid flow and the build-up of torque in the axial piston unit can no longer respond correctly to the operator‘s specifications. Even the use of various filter elements (external or internal flow filtration) will not rule out a fault but merely reduce the risk. The machine/system manufacturer must test whether remedial measures are needed on the machine for the application concerned in order to bring the driven consumer into a safe position (e.g. safe stop) and ensure any measures are properly implemented.
- In certain conditions, moving parts in high pressure relief valves might get stuck in an undefined position due to contamination (e.g. contaminated hydraulic fluid). This can result in restriction or loss of load holding functions in lifting winches. Therefore it is the machine and/or system manufacturers responsibility to make sure that the load can always be put in a safe mode if needed. Also, he needs to ensure that these measures are properly implemented.

Accessories

Product	Refer to document
Counterbalance valve BVD 20-25	RE 95522
Counterbalance valve BVE 25	RE 95526
Speed sensor DSA	RE 95133