ENGINEERING TOMORROW

Technical Information

Series T90 Axial Piston Pumps
Size 055/075/100



Revision history

Table of revisions

Date	Changed	Rev
June 2022	Added notes into Remote charge pressure filtration	0307
March 2022	Updated Mating pump requirements	0306
February 2021	Corrected Size 100 HCEDC on Installation Drawings.	0203
September 2020	Updated an introduction.	0202
August 2020	Updated HCEDC in Control Options.	0201
July 2020	Added drawings of HCEDC Size 075 and 100.	0109
July 2020	Updated Model Code M, T and W.	0108
April 2020	Changed document number from 'BC00000063' to 'BC152886484177', updated Installation drawings	0107
March 2020	5th edition - fixed value of input speed	0106
February 2020	4th edition - added HCEDC	0105
January 2019	3rd edition	0104
September 2014	2nd edition	BA
February 2012	1st edition	AA

Contents

General Description

T90 Family of Pumps....5
PLUS+1 Compliant Controls and Sensors....5
Design....6
Pictorial Circuit Diagram....7
System Schematic (with PL function)....7

Technical Specifications

General Specifications....8
Features and Options....8
Operating Parameters....9
Fluid Specifications....9

Operating Parameters

Overview....10
Input Speed....10
Independent Braking System....10
System Pressure....10
Servo Pressure....11
Charge Pressure....11
Case Pressure....11
External Shaft Seal Pressure....12
Temperature and Viscosity....12

System Design Parameters

Filtration System....13
Filtration Options....13
Suction filtration - Option S....13
Charge pressure filtration (partial charge pump flow)....14
Remote charge pressure filtration....14
Fluid selection....15
Reservoir....15
Case Drain....15
Pump Life....15
Charge Pump....15
Charge pump sizing/selection....16
Bearing Loads and Life....16
Applications with external shaft loads....16
Understanding and Minimizing System Noise....17
Sizing Equations....18
Mounting Flange Loads....19

Master Model Code

Model Code (R-Size-M-P-J)....21
Model Code (G-N-F-L-H)....23
Model Code (T-W-Y/Z-K)....24

Control Options

3-Position Electric Control(FNR), Options: DD....25
Response time....26
Manual Displacement Control (MDC), Options: MA, MS, LU, LW....27
Features and Benefits....27
External Control Handle Requirements....27
MDC with Neutral Start Switch (NSS)....28
High Current Electric Displacement Control (HCEDC); Options A4, A5....29
EDC Control Signal Requirements....29
Connectors....30
EDC solenoid data....30

Features and Options

Multi-Function Valves....31
Overpressure protection....31

Contents

Pressure limiting function ... 31
Bypass Function ... 32
Auxiliary Mounting Pads ... 32
Mating pump requirements ... 32
Displacement Limiter ... 33
Shaft Torque ... 34
Shaft torque and spline lubrication ... 34
Shaft torque for tapered shafts ... 34
Shaft Availability and Torque Ratings ... 35
Tapered Shaft Customer Acknowledgement ... 35
Charge Pump ... 36
Charge pump sizing/selection ... 36
Charge pump flow and power curves ... 36
Speed Sensor ... 38
Connector Pin Assignments ... 39

Installation Drawings

Frame Size 055 : MDC ... 40
Frame Size 075 : MDC ... 41
Frame Size 100 : MDC ... 42
Frame Size 075 : HCEDC ... 43
Frame Size 100 : HCEDC ... 44

General Description

T90 Family of Pumps

Danfoss T90 variable pump is on the base of S90 variable pump, combined with Danfoss's the global application of experience and the latest technology to develop a new axial piston variable pump, it can cooperate T90 motor or other hydraulic products of hydraulic drive system to achieve the fluid transmission and control, mainly used in closed system.

Currently, Danfoss T90 products not only for truck mixer drum drive, but also walk close system of agricultural machinery and road roller. For the three applications, T90 has released different configuration options for the user to select. Please refer pump type code.

- Series T90 axial piston pumps are designed with the most advanced technology.
- With optional sizes 055, 075, 100.
- Axial piston design of high effeciency.
- Proved reliability and excellent performance.
- Compact, light weight.
- PLUS+1™ compliant controls and sensors.

Series T90 variable displacement pumps are compact, high power density units. All models utilize the parallel axial piston/slipper concept in conjunction with a tiltable swashplate to vary the pump's displacement. Reversing the angle of the swashplate re-verses the flow of oil from the pump and thus reverses the direction of rotation of the motor output.

Series T90 pumps include an integral charge pump which is manually controlled to pro-vide system replenishing and cooling oil flow, as well as control fluid flow.

PLUS+1 Compliant Controls and Sensors

A wide range of Series T90 controls and sensors are PLUS+1™ compliant. PLUS+1 compliance means our controls and sensors are directly compatible with the PLUS+1 machine control architecture. Adding Series T90 pumps to your application using PLUS+1 GUIDE software is as easy as drag-and-drop. Software development that used to take months can now be done in just a few hours. For more information on PLUS+1 GUIDE, visit www.sauer-danfoss.com/plus1.

Series T90 pumps can be used together in combination with other Danfoss pumps and motors in the overall hydraulic system. Danfoss hydrostatic products are designed with many different displacement, pressure and load-life capabilities.

Go to the Danfoss website or applicable product catalog to choose the components that are right for your complete closed circuit hydraulic system.

General Description

Design

Series T90 pump cross-section

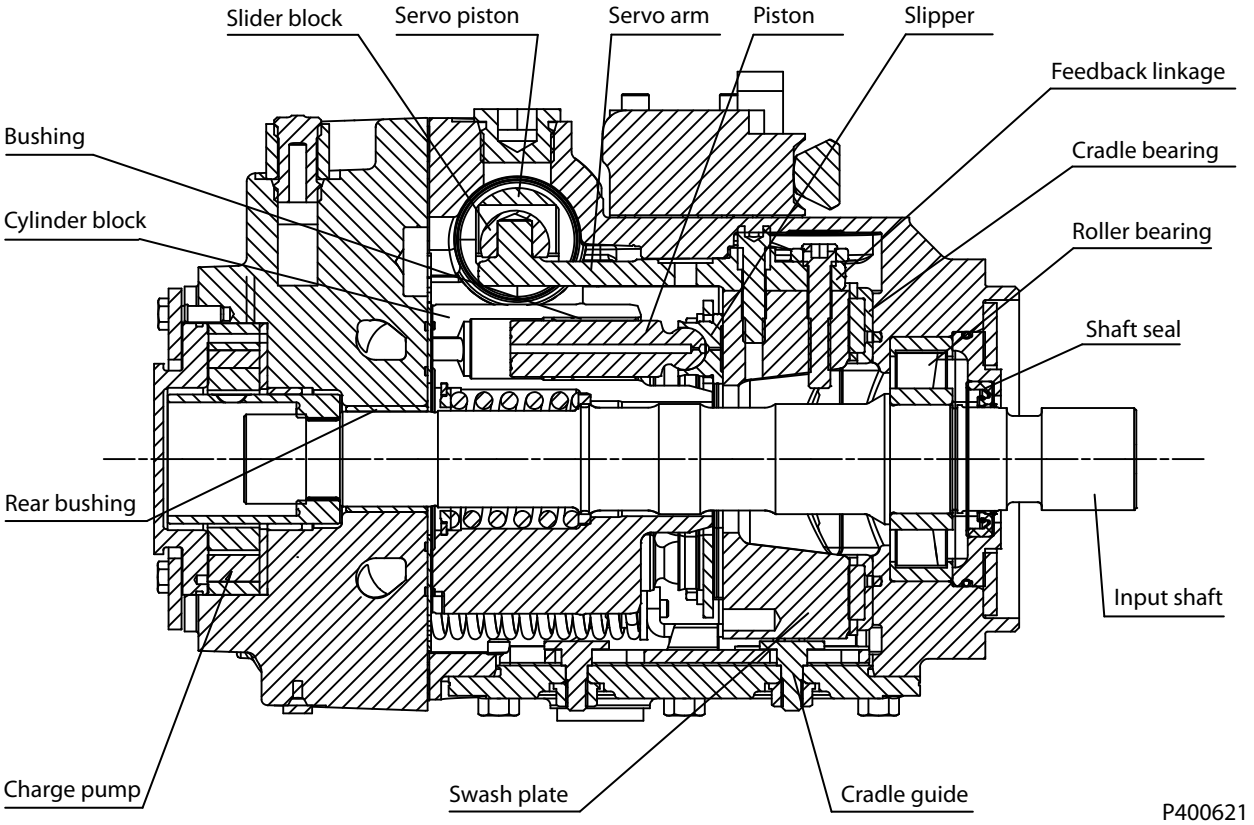

Typical name plate

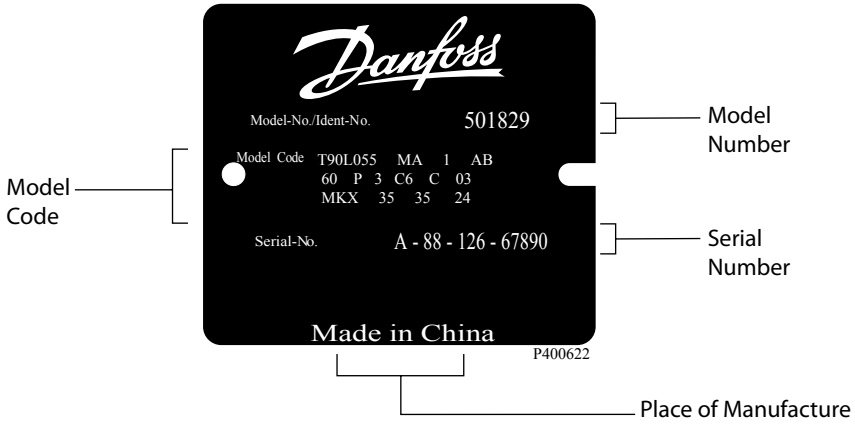

Series T90 pumps are manufactured in China. Place of manufacture shown on nameplate will correspond with the actual place of manufacture.

General Description

Pictorial Circuit Diagram

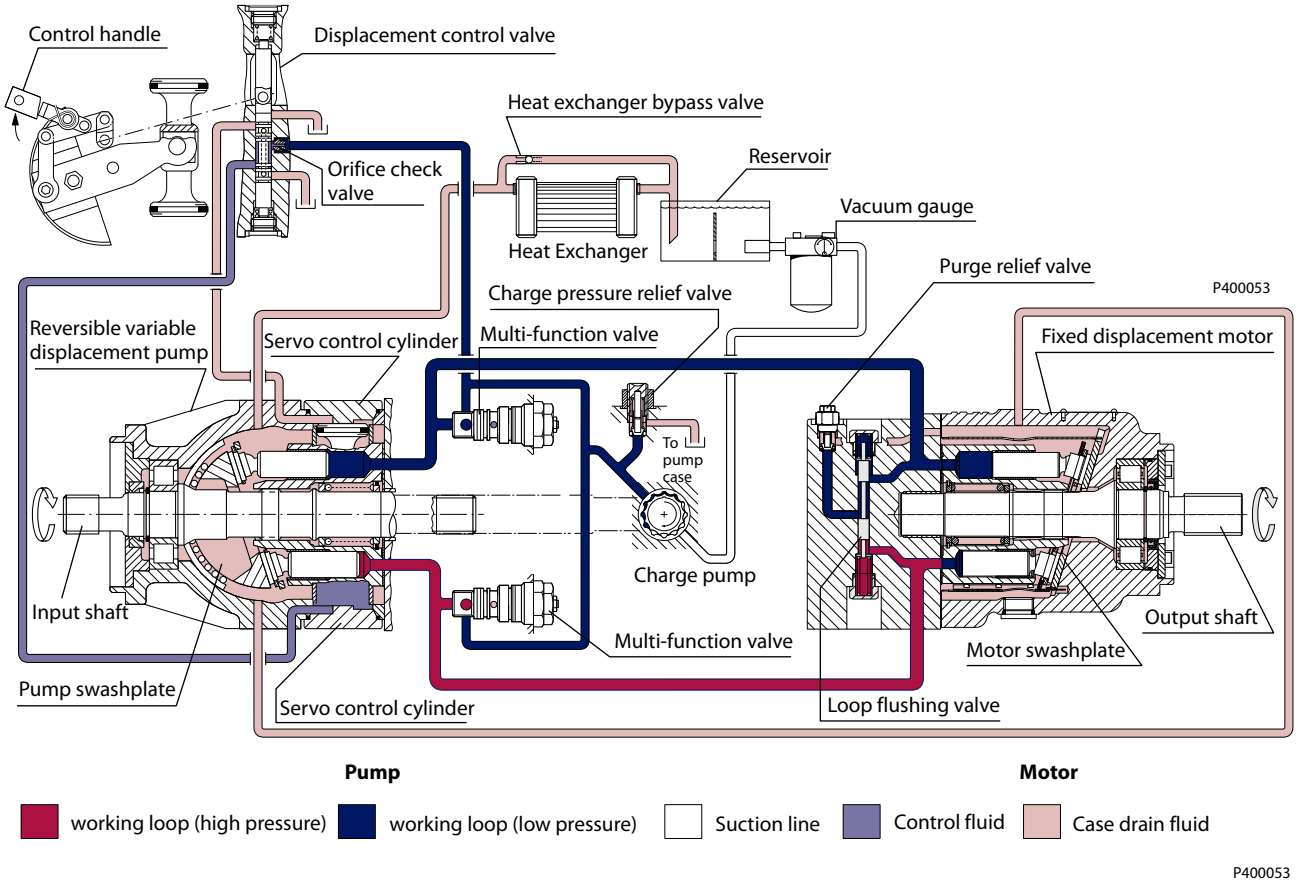

System Schematic (with PL function)

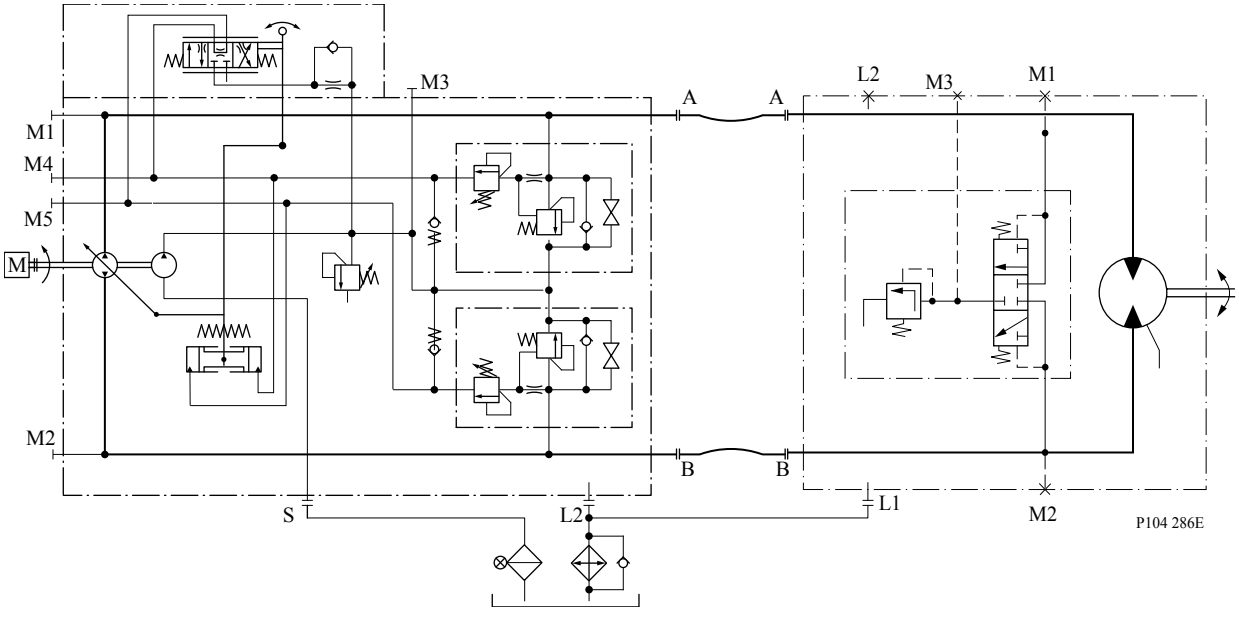

Technical Specifications

General Specifications

Design	Axial piston pump of cradle swashplate design with variable displacement
Direction of rotation	Clockwise, counterclockwise
Pipe connections	Main pressure ports: ISO split flange boss
	Remaining ports: SAE straight thread O-ring boss
Recommended installation position	Pump installation position is discretionary, however the recommended control position is on the top or at the side, with the top position preferred. Vertical input shaft installation is acceptable. If input shaft is at the top 1 bar case pressure must be maintained during operation. The pump housing must be filled with hydraulic fluid under all conditions; including after a long period of shutdown. Before operating the machine, ensure the pump housing and case drain lines are free of air. Recommended mounting for a multiple pump stack is to arrange the highest power flow towards the input source. Consult Danfoss for nonconformance to these guidelines.
Auxiliary cavity pressure	Will be inlet pressure with internal charge pump. For reference see Operating Parameters. Will be case pressure with external charge supply.

Features and Options

Feature	**Unit**	**Frame**		
		055	**075**	**100**
Displacement	cm^3/rev. [in^3]/rev.	55 [3.35]	75 [4.59]	100 [6.10]
Flow at rated speed (theoretical)	l/min. [US gal/min.]	193 [51]	270 [62]	300 [79]
Torque at maximum displacement (theoretical)	N•m/bar [lbf•in/1000 psi]	0.88 [530]	1.19 [730]	1.59 [970]
Mass moment of inertia of rotating components	kg•m^2 [slug•ft^2]	0.0065 [0.0048]	0.0100 [0.0074]	0.0171 [0.0126]
Weight (with control opt. MA)	kg [lb]	40 [88]	49 [108]	68 [150]
Mounting (per ISO 3019-1)		SAE C		
Rotation		Right hand or Left hand rotation		
Main ports: 4-bolt split-flange (per SAE J518 code 62)	mm [in]	25.4 [1.0]	25.4 [1.0]	25.4 [1.0]
Main port configuration		Twin or side port		
Case drain ports (SAE O-ring boss)	UNF thread (in.)	1.0625–12	1.0625–12	1.0625–12
Other ports		SAE O-ring boss		
Shafts		Splined		
Auxiliary mounting		SAE-A, B, C		

Technical Specifications

Operating Parameters

Parameter	Unit	Frame		
		055	075	100
Input speed				
Minimum	min-1(rpm)	500	500	500
Rated Speed		3500	3150	3000
Maximum		3700	3350	3200
System pressure				
Maximum working pressure	bar[psi]	350 [5076]		
Maximum pressure		420 [6092]		
Minimum low loop pressure		10 [650]		
Charge pump inlet pressure				
Rated	bar(absolute) [in. Hg vac.]	0.7 [9]		
Minimum (cold start)		0.2 [24]		
Case pressure				
Rated	bar[psi]	3.0 [40]		
Maximum		5.0 [75]		

Fluid Specifications

Features		Units	28/32/38/45
Viscosity	Intermittent[1]	$mm^2/sec.$ [SUS]	5 [42]
	Minimum		7 [49]
	Recommended range		12 - 80 [66 - 370]
	Maximum (cold start)[2]		1600 [7500]
Temperature range[3]	Minimum (cold start)	°C [°F]	-40 [-40]
	Recommended range		60 - 85 [140 - 185]
	Maximum continuous		104 [220]
	Maximum intermittent		115 [240]
Filtration (recommended minimum)	Cleanliness per ISO 4406		22/18/13
	Efficiency (charge pressure filtration)	β-ratio	β15-20=75(β10≥10)
	Efficiency (suction filtration)		β35-45=75(β10≥2)
	Recommended inlet screen mesh size	µm	100 - 125

[1] Intermittent=Short term t <1 min per incident and not exceeding 2 % of duty cycle based load-life.

[2] Cold start = Short term t < 3 min, p < 50 bar [725 psi], n < 1000 min^{-1} (rpm)

[3] At the hottest point, normally case drain port.

Operating Parameters

Overview

This section defines the operating parameters and limitations for Series T90 pumps with regard to input speeds and pressures. For actual parameters, refer to the Operating parameters for each displacement.

Input Speed

Minimum speed is the lowest input speed recommended during engine idle condition. Operating below minimum speed limits the pump's ability to maintain adequate flow for lubrication and power transmission.

Rated speed is the highest input speed recommended at full power condition. Operating at or below this speed should yield satisfactory product life.

Maximum speed is the highest operating speed permitted. Exceeding maximum speed reduces product life and can cause loss of hydrostatic power and braking capacity. Never exceed the maximum speed limit under any operating conditions.

Operating conditions between Rated and Maximum speed should be restricted to less than full power and to limited periods of time. For most drive systems, maximum unit speed occurs during downhill braking or negative power conditions.

For more information consult *Pressure and speed limits, BC152886484313*, when determining speed limits for a particular application.

During hydraulic braking and downhill conditions, the prime mover must be capable of providing sufficient braking torque in order to avoid pump over speed. This is especially important to consider for turbocharged and Tier 4 engines.

Independent Braking System

Warning

Unintended vehicle or machine movement hazard.

Exceeding maximum speed may cause a loss of hydrostatic drive line power and braking capacity.

You must provide a braking system, redundant to the hydrostatic transmission, sufficient to stop and hold the vehicle or machine in the event of hydrostatic drive power loss. The braking system must also be sufficient to hold the machine in place when full power is applied.

System Pressure

System pressure is the differential pressure between high pressure system ports. It is the dominant operating variable affecting hydraulic unit life. High system pressure, which results from high load, reduces expected life. Hydraulic unit life depends on the speed and normal operating, or weighted average, pressure that can only be determined from a duty cycle analysis.

Application pressure is the high pressure relief or pressure limiter setting normally defined within the order code of the pump. This is the applied system pressure at which the driveline generates the maximum calculated pull or torque in the application.

Maximum Working pressure is the highest recommended application pressure. Maximum working pressure is not intended to be a continuous pressure. Propel systems with application pressures at, or below, this pressure should yield satisfactory unit life given proper component sizing.

Maximum pressure is the highest allowable application pressure under any circumstance. Application pressures above maximum working pressure will only be considered with duty cycle analysis and factory approval.

Operating Parameters

Minimum low loop pressure must be maintained under all operating conditions to avoid cavitation.

Servo Pressure

Servo pressure is the pressure in the servo system needed to position and hold the pump on stroke. It depends on system pressure and speed. At minimum servo pressure the pump will run at reduced stroke depending on speed and pressure.

Minimum servo pressure at corner power holds the pump on full stroke at max speed and max pressure.

Maximum servo pressure is the highest pressure typically given by the charge pressure setting.

Charge Pressure

An internal charge relief valve regulates charge pressure. Charge pressure supplies the control with pressure to operate the swashplate and to maintain a minimum pressure in the low side of the transmission loop.

The charge pressure setting listed in the order code is the set pressure of the charge relief valve with the pump in neutral, operating at 1800 min^{-1} [rpm], and with a fluid viscosity of 32 mm^2/s [150 SUS].

Pumps configured with no charge pump (external charge supply) are set with a charge flow of 30 l/min [7.93 US gal/min] and a fluid viscosity of 32 mm^2/s [150 SUS].

The charge pressure setting is referenced to case pressure. Charge pressure is the differential pressure above case pressure.

Minimum charge pressure is the lowest pressure allowed to maintain a safe working condition in the low side of the loop. Minimum control pressure requirements are a function of speed, pressure, and swashplate angle, and may be higher than the minimum charge pressure shown in the Operating parameters tables.

Maximum charge pressure is the highest charge pressure allowed by the charge relief adjustment, and which provides normal component life. Elevated charge pressure can be used as a secondary means to reduce the swashplate response time.

At normal operating temperature charge inlet pressure must not fall below *rated charge inlet pressure (vacuum)*.

Minimum charge pump inlet pressure is only allowed at cold start conditions. In some applications it is recommended to warm up the fluid (e.g. in the tank) before starting the engine and then run the engine at limited speed.

Maximum charge pump inlet pressure may be applied continuously.

Case Pressure

Under normal operating conditions, the **rated case pressure** must not be exceeded. During cold start case pressure must be kept below maximum intermittent case pressure. Size drain plumbing accordingly.

Auxiliary Pad Mounted Pumps. The auxiliary pad cavity of S90 pumps configured without integral charge pumps is referenced to case pressure. Units with integral charge pumps have auxiliary mounting pad cavities referenced to charge inlet (vacuum).

C Caution

Possible component damage or leakage

Operation with case pressure in excess of stated limits may damage seals, gaskets, and/or housings,causing external leakage. Performance may also be affected since charge and system pressure are additive to case pressure.

Operating Parameters

External Shaft Seal Pressure

In certain applications the input shaft seal may be exposed to external pressure. In order to prevent damage to the shaft seal the maximum differential pressure from external sources must not exceed 0.4 bar (5.8 psi) over pump case pressure. The case pressure limits of the pump must also be followed to ensure the shaft seal is not damaged.

Caution

Regardless of the differential pressure across the shaft seal, the shaft seal has been known to pump oil from the external source (e. g. gear box) into the pump case.

Temperature and Viscosity

Temperature

The high temperature limits apply at the hottest point in the transmission, which is normally the motor case drain. The system should generally be run at or below the quoted **rated temperature**.

The **maximum intermittent temperature** is based on material properties and should never be exceeded.

Cold oil will generally not affect the durability of the transmission components, but it may affect the ability of oil to flow and transmit power; therefore temperatures should remain 16 °C [30 °F] above the pour point of the hydraulic fluid.

The **minimum temperature** relates to the physical properties of component materials.

Size heat exchangers to keep the fluid within these limits. Danfoss recommends testing to verify that these temperature limits are not exceeded.

Viscosity

For maximum efficiency and bearing life, ensure the fluid viscosity remains in the **recommended range**.

The **minimum viscosity** should be encountered only during brief occasions of maximum ambient temperature and severe duty cycle operation.

The **maximum viscosity** should be encountered only at cold start.

System Design Parameters

Filtration System

To prevent premature wear, ensure only clean fluid enters the hydrostatic transmission circuit. A filter capable of controlling the fluid cleanliness to ISO 4406 class 22/18/13

(SAE J1165) or better, under normal operating conditions, is recommended.

These cleanliness levels can not be applied for hydraulic fluid residing in the component housing/case or any other cavity after transport.

The filter may be located on the pump (integral) or in another location (remote).

The integral filter has a filter bypass sensor to signal the machine operator when the filter requires changing. Filtration strategies include suction or pressure filtration. The selection of a filter depends on a number of factors including the contaminant ingression rate, the generation of contaminants in the system, the required fluid cleanliness, and the desired maintenance interval. Filters are selected to meet the above requirements using rating parameters of efficiency and capacity.

Filter efficiency can be measured with a Beta ratio[1] (βX). For simple suction-filtered closed circuit transmissions and open circuit transmissions with return line filtration, a filter

with a β-ratio within the range of $\beta_{35\text{-}45} = 75$ ($\beta_{10} \geq 2$) or better has been found to be satisfactory. For some open circuit systems, and closed circuits with cylinders being supplied from the same reservoir, a considerably higher filter efficiency is recommended. This also applies to systems with gears or clutches using a common reservoir.

For these systems, a charge pressure or return filtration system with a filter β-ratio in the range of $\beta_{15\text{-}20} = 75$ ($\beta_{10} \geq 10$) or better is typically required.

Because each system is unique, only a thorough testing and evaluation program can fully validate the filtration system. Please see *Design Guidelines for Hydraulic Fluid Cleanliness Technical Information*, **BC152886482150** for more information.

[1] Filter βx-ratio is a measure of filter efficiency defined by ISO 4572. It is defined as the ratio of the number of particles greater than a given diameter ("x" in microns) upstream of the filter to the number of these particles downstream of the filter.

Filtration Options

Suction filtration - Option S

Suction filtration is the only option available for concrete pumps.

The suction filter is placed in the circuit between the reservoir and the inlet to the charge pump, as shown below.

The use of a filter contamination monitor is recommended.

Suction filtration

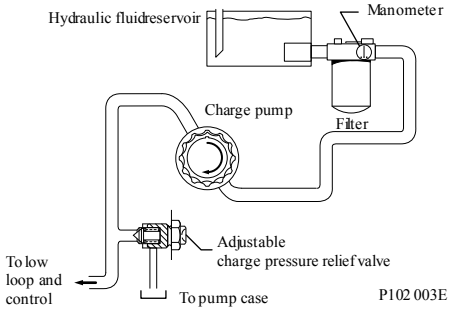

C Caution

Clogged filters can cause cavitation, which damages the charge pump. We recommend a filter bypass with a filter bypass sensor to prevent damage due to blocked suction filters.

Charge pressure filtration (partial charge pump flow)

Two types of pressure filtration exist for most Series 90 pumps. The two types are: remote pressure filtration (filter remotely mounted on vehicle) and integral pressure filtration (filter mounted to the endcap). Verify option availability in the size specific technical information.

In either case the filtration circuit is the same with the filter element situated in the circuit downstream the charge pump and upstream of the charge relief valve such that full charge flow is continuously filtered, as shown in the accompanying illustrations. Charge pressure filtration can mitigate high inlet vacuum in cold start-ups and provides fluid filtration immediately prior to entrance to the loop and the control system. Pressure filtration provides a higher level of filtering efficiency than suction filtration.

Filters used in charge pressure filtration circuits must be rated to at least 35 bar [508 psi] pressure. A 100 – 125 µm screen located in the reservoir or in the charge inlet line is recommended when using charge pressure filtration.

Technical data according to ISO 16889

Nominal flow at 30mm2/s and ΔP 0.5 bar[7.3 psi] (clean filter element only)		Minimum β-ratio
Short	60 l/min	β7.5(C)=75 (β5(C) ≥10)
Long	105 l/min	

Remote charge pressure filtration

A special adapter head is available to allow for the charge filter to be located conveniently for easy service and replacement. Care should be taken to minimize the hydraulic pressure drops associated with long connecting lines, small diameter hoses, or restrictive port adaptors at the filter head or endcap. Ensure the normal operating pressure drop across the remote filtration in and out ports is sufficiently below the crack pressure setting of the recommended filter bypass valve.

Charge pressure filtration

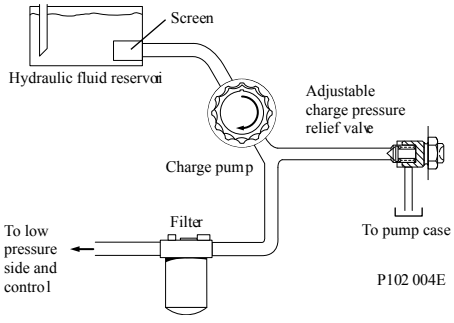

The filter is installed parallel to shaft by factory (+/-45° deviation). During installation, the installation direction can be adjusted according to the actual situation. See the service manual in detail.

W Warning

Remote filter heads without bypass and poor plumbing design can encounter excessive pressure drops that can lead to charge pump damage in addition to contaminants being forced through the filter media and into the transmission loop.

System Design Parameters

Fluid selection

Ratings and performance data are based on operating with hydraulic fluids containing oxidation, rust and foam inhibitors. These fluids must possess good thermal and hydrolytic stability to prevent wear, erosion, and corrosion of pump components.

Never mix hydraulic fluids of different types.

Reservoir

The hydrostatic system reservoir should accommodate maximum volume changes during all system operating modes and promote de-aeration of the fluid as it passes through the tank. A suggested minimum total reservoir volume is 5⁄8 of the maximum charge pump flow per minute with a minimum fluid volume equal to ½ of the maximum charge pump flow per minute. This allows 30 seconds fluid dwell for removing entrained air at the maximum return flow. This is usually adequate to allow for a closed reservoir (no breather) in most applications.

Locate the reservoir outlet (charge pump inlet) above the bottom of the reservoir to take advantage of gravity separation and prevent large foreign particles from entering the charge inlet line. A 100-125 µm screen over the outlet port is recommended. Position the reservoir inlet (fluid return) to discharge below the normal fluid level, toward the interior of the tank. A baffle (or baffles) will further promote de-aeration and reduce surging of the fluid.

Case Drain

All single S90 pumps are equipped with multiple drain ports. Port selection and case drain routing must enable the pump housing to maintain a volume of oil not less than half full and normal operating case pressure limits of the unit are maintained. Case drain routing and design must consider unit case pressure ratings.

A case drain line must be connected to one of the case outlets to return internal leakage to the system reservoir.

Do not over torque the fitting on case drain port L2 (located on the side cover). The proper torque is 100 N•m [74 lbf•ft] maximum. Over torquing the fitting may change the neutral position of the swashplate.

Pump Life

Pump life depends on several factors, such as speed, pressure, and swashplate angle. For detailed product life calculation, please contact your Danfoss representative.

Charge Pump

Charge flow is required on all Series 90 pumps applied in closed circuit installations. The charge pump provides flow to make up internal leakage, maintain a positive pressure in the main circuit, provide flow for cooling and filtration, replace any leakage losses from external valving or auxiliary systems, and to provide flow and pressure for the control system.

Many factors influence the charge flow requirements and the resulting charge pump size selection. These factors include system pressure, pump speed, pump swashplate angle, type of fluid, temperature, size of heat exchanger, length and size of hydraulic lines, control response characteristics, auxiliary flow requirements, hydrostatic motor type, etc. When initially sizing and selecting hydrostatic units for an application, it is frequently not possible to have all the information necessary to accurately evaluate all aspects of charge pump size selection.

Unusual application conditions may require a more detailed review of charge pump sizing. Charge pressure must be maintained at a specified level under all operating conditions to prevent damage to the transmission. Danfoss recommends testing under actual operating conditions to verify this.

System Design Parameters

Charge pump sizing/selection

In most applications a general guideline is that the charge pump displacement should be at least 10 % of the total displacement of all components in the system. Unusual application conditions may require a more detailed review of charge flow requirements. Refer to *Selection of Drive line Components*, **BC157786484430**, for a detailed procedure.

System features and conditions which may invalidate the 10 % guideline include (but are not limited to):

- Continuous operation at low input speeds (< 1500 min-1 (rpm))
- High shock loading and/or long loop lines
- High flushing flow requirements
- Multiple Low Speed High Torque motors
-

Bearing Loads and Life

In vehicle propel drives with no external shaft loads , and where the system pressure and swashplate angle are changing direction and magnitude regularly, the normal L20 bearing life (80% survival) will exceed the hydraulic life of the unit.

In non-propel drives, such as vibratory drives, conveyor drives and fan drives, the operating speed and pressure are often nearly constant and the swashplate angle is predominantly at maximum. These drives have a distinct duty cycle compared to a propulsion drive. In these types of applications, a bearing life review is recommended.

For bearing life, speed, pressure, swashplate angle, plus external loads will be considered. Other factors that affect bearing life include fluid type, viscosity, and cleanliness.

Applications with external shaft loads

External loads are found in applications where the pump is driven with a side/thrust load (belt drive or gear drive) as well as in installations with misalignment and improper concentricity between the pump and drive coupling. All external loads act to reduce bearing life.

In applications where you cannot avoid external radial shaft loads, orient the load to 0° or 180° position. Use tapered output shafts or clamp-type couplings where radial shaft loads are present.

In addition, external thrust loads can reduce bearing life in systems with low delta pressure or in combination with external radial loads/bending moments.

Re = Me / L

Me = Shaft moment

L = Flange distance

Re = External force

Radial load position

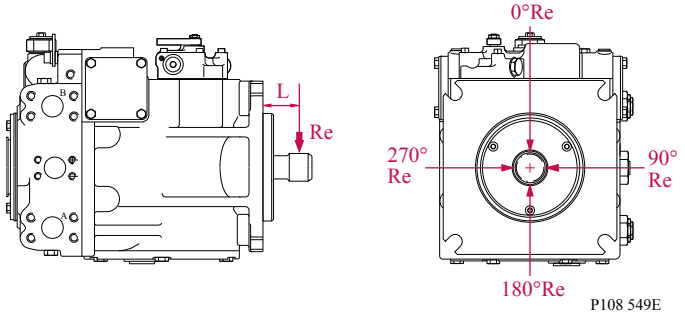

System Design Parameters

Maximum allowable external shaft load

Parameter	055	075	100
External moment (Me) N•m [lbf•in]	101 [893]	118 [1043]	126 [1114]

* no tapered shaft available

If continuous applied external radial loads are 25% of the maximum allowable or more or thrust loads/ bending moments known to occur, contact your Danfoss representative for an evolution of bearing life.

Avoid external thrust loads in either direction.

Understanding and Minimizing System Noise

Noise is transmitted in fluid power systems in two ways: as fluid borne noise, and structure borne noise.

Fluid-borne noise (pressure ripple or pulsation) is created as pumping elements discharge oil into the pump outlet. It is affected by the compressibility of the oil, and the pump's ability to transition pumping elements from high to low pressure. Pulsations travel through the hydraulic lines at the speed of sound (about 1400 m/s [4600 ft/sec] in oil) until there is a change (such as an elbow) in the line. Thus, amplitude varies with overall line length and position.

Structure born noise is transmitted wherever the pump casing connects to the rest of the system. The way system components respond to excitation depends on their size, form, material, and mounting.

System lines and pump mounting can amplify pump noise.

Follow these suggestions to help minimize noise in your application:

- Use flexible hoses.
- Limit system line length.
- If possible, optimize system line position to minimize noise.
- If you must use steel plumbing, clamp the lines.
- If you add additional support, use rubber mounts.
- Test for resonants in the operating range; if possible avoid them.

System Design Parameters

Sizing Equations

The following equations are helpful when sizing hydraulic pumps. Generally, the sizing process is initiated by an evaluation of the machine system to determine the required motor speed and torque to perform the necessary work function. Refer to *Selection of drive line components*, **BC157786484430**, for a more complete description of hydrostatic drive line sizing. First, the motor is sized to transmit the maximum required torque. The pump is then selected as a flow source to achieve the maximum motor speed.

SI units

Output flow $Q = \frac{V_g \cdot n \cdot \eta_v}{1000}$ (l/min..)

Input torque $M = \frac{V_g \cdot \Delta p}{20 \cdot \pi \cdot \eta_m}$ (N•m)

Input power $P = \frac{M \cdot n \cdot \pi}{30\,000} = \frac{Q \cdot \Delta p}{600 \cdot \eta_t}$ (kW)

V_g = Displacement per revolution (cm^3/rev)
Δp = $p_O - p_i$ (system pressure) (bar)
n = Speed (min^{-1}(rpm))
η_v = Volumetric efficiency
η_m = Mechanical efficiency
η_t = Overall efficiency ($\eta_v \cdot \eta_m$)

US units

Output flow $Q = \frac{V_g \cdot n \cdot \eta_v}{231}$ (US gal/min..)

Input torque $M = \frac{V_g \cdot \Delta p}{2 \cdot \pi \cdot \eta_m}$ (lbf•in)

Input power $P = \frac{M \cdot n \cdot \pi}{198\,000} = \frac{Q \cdot \Delta p}{1714 \cdot \eta_t}$ (hp)

V_g = Displacement per revolution (in^3/rev)
Δp = $p_O - p_i$ (system pressure) (psi)
n = Speed (min^{-1}(rpm))
η_v = Volumetric efficiency
η_m = Mechanical efficiency
η_t = Overall efficiency ($\eta_v \cdot \eta_m$)

System Design Parameters

Mounting Flange Loads

Adding tandem mounted auxiliary pumps and/or subjecting pumps to high shock loads may result in excessive loading of the mounting flange.

Applications which experience extreme resonant vibrations or shock may require additional pump support. The overhung load moment for multiple pump mounting may be estimated using the formula below.

Overhung load example

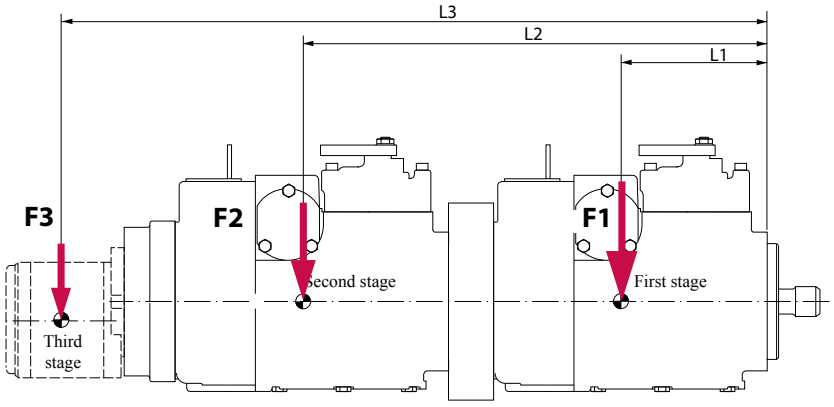

P108 511E

Estimated maximum and rated acceleration factors for some typical applications are shown in the table below.

Estimating overhung load moments

Based on SI units

W = Mass of pump kg
L = Distance from mounting f ange to pump center of gravity (refer to Installation drawings section)

$M_R = g \bullet G_R (W_1L_1 + W_2L_2 + ... + W_nL_n)$
$M_S = g \bullet G_S (W_1L_1 + W_2L_2 + ... + W_nL_n)$

Where:
M_R = Rated load moment N•m
M_S = Shock load moment N•m
g = Gravity 9.81 m/s^2
G_R = Calculation factor for rated (vibratory) acceleration (G's)*
G_S = Calculation factor for maximum shock acceleration (G's)*

Based on US units

W = Weight of pump [lb]
L = Distance from mounting f ange [in] to pump center of gravity

$M_R = G_R (W_1L_1 + W_2L_2 + ... + W_nL_n)$
$M_S = G_S (W_1L_1 + W_2L_2 + ... + W_nL_n)$

Where:
M_R = Rated load moment N•m
M_S = Shock load moment N•m

*This factor depends on the application (see next page).

Use these values for a rough load estimation in the absence of specific data.

Typical G loads for various applications

Application	Calculation factor	
	Rated (vibratory) acceleration G_R	Maximum (shock) acceleration G_S
Skid Steer Loader	8	15-20
Trencher (rubber tires)	3	8
Asphalt Paver	2	6
Windrower	2	5

System Design Parameters

Typical G loads for various applications (continued)

Application	Calculation factor	
	Rated (vibratory) acceleration G_R	Maximum (shock) acceleration G_S
Aerial Lift	1.5	4
Turf Care Vehicle	1.5	4
Vibratory Roller	6	10
T000 165E		

Allowable overhung load moment values are shown in the following table.

Allowable overhung load moments

Frame size	Rated moment (MR)		Shock load moment (MS)	
	N•m	lbf•in	N•m	lbf•in
055	1580	14 000	5650	50 000
075	1580	14 000	5650	50 000
100	1580	14 000	5650	50 000

Master Model Code

Model Code (R-Size-M-P-J)



R - Type and Rotation

Code	Description	055	075	100
R	Right Hand [CW]	●	●	●
L	Left Hand [CCW]	●	●	●

Size

Code	Description	055	075	100
055	55 cc [3.36 in3] max. displacement per revolution	●		
075	75 cc [4.58 in3] max. displacement per revolution		●	
075	100 cc [6.10 in3] max. displacement per revolution			●

M - Controls

Code	Description	055	075	100
DD	3 positon F-N-R solenoid control (24 V , DC), DIN connector		●	
MA	MDC	●	●	●
MS	MDC With Neutral Start Switch	●	●	●
LU	MDC With Offset Handle, Dust Seal Feature		●	●
LW	MDC For Rough/Open Enviroments		●	●
LY	2 Positon Solenoid Valve (24 V,DC), Brake Pressure Port, Dust Seal Feature		●	●
L1	2 Positon Solenoid Valve (24V,DC), Brake Pressure Port, Offset Handle, Dust Seal Feature		●	●
A4	12V, HCEDC,Dual 2-Pin Deutsch Connector, (710-1640mA), IP69 rated coils		●	●
A5	24V, HCEDC,Dual 2-Pin Deutsch Connector, (352-820mA), IP69 rated coils		●	●

P - High Pressure Regulation

Code	Description	055	075	100
D	High pressure relief only, For Mixer Truck	●	●	●
1	Pressure limiter for port A and B (140-450 bar)	●	●	●

J - Auxiliary Mounting Pad

Code	Description	055	075	100
NN	No auxiliary mounting pad	●	●	●
AB	SAE-A with sealed cover, 9 teeth coupling	●	●	●

Master Model Code

J - Auxiliary Mounting Pad (continued)

Code	Description	055	075	100
BC	SAE-B with sealed cover, 13 teeth coupling	●	●	●
CD	SAE-C with sealed cover, 4 bolt adapter, 14 teeth coupling, (2) ½-13 UNC	●	●	●

Master Model Code

Model Code (G-N-F-L-H)



G - Endcap Ports

Code	Description	055	075	100
60	Side Ports	●	●	●
80	Twin Ports	●	●	●
8A	Twin Ports With Metric Threads At The HD Ports, For Mixer Truck	●	●	●

N - Filtration

Code	Description	055	075	100
F	Suction (For Use With Internal Charge Pump)		●	●
P	Pressure Integral (Short Filter)	●	●	●
R	Rremote Pressure Filtration	●	●	●
S	Suction (For Use With Internal Charge Pump)	●	●	●

F - Displacement Limitation

Code	Description	055	075	100
3	no limiters	●	●	●
4	limitation both sides	●	●	●

L - Shaft Options

Code	Description	055	075	100
C6	splined shaft, 21 teeth, pitch = 16 / 32	●	●	●
C7	splined shaft, 23 teeth, pitch = 16 / 32		●	●
D7	splined shaft, 23 teeth, pitch = 16 / 32, with thread M10		●	●
D9	splined shaft, 21 teeth, pitch = 16 / 32, with thread M10	●	●	
DC	splined shaft, 23 teeth, pitch = 16 / 32, with thread M10,With Flange, For Mixer Truck		●	●
DD	splined shaft, 21 teeth, pitch = 16 / 32, with thread M10,With Flange,For Mixer Truck	●		
S1	splined shaft, 14 teeth, pitch = 12/24	●	●	●

H - Charging System

Code	Description	055	075	100
C	14 cc / rev	●		
D	17 cc / rev	●	●	
E	20 cc / rev		●	●
F	26 cc / rev			●

Master Model Code

Model Code (T-W-Y/Z-K)

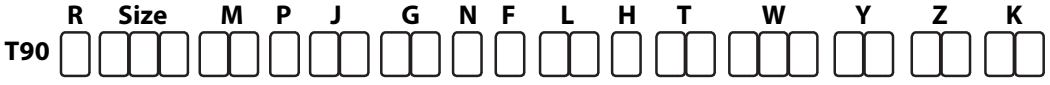

T - Control Orifice Options

Code	Description					055	075	100
FNR	inlet P	drain TA	drain TB	servo A	servo B			
G8	0.66	1.20	1.20	n/o	n/o		●	
GB	0.81	1.20	1.20	n/o	n/o		●	
MDC	inlet P	drain TA	drain TB	servo A	servo B	**055**	**075**	**100**
00	n/o	n/o	n/o	n/o	n/o	●	●	●
03	0.81	n/o	n/o	n/o	n/o		●	●
C5	0.81	1.40	1.40	n/o	n/o			●
HCEDC	inlet P	drain TA	drain TB	servo A	servo B	**055**	**075**	**100**
F4	0.81	n/o	n/o	2.50	2.50		●	●
F5	1.57	n/o	n/o	2.50	2.50		●	●
F6	2.34	n/o	n/o	2.50	2.50		●	●

W - Special Hardware Features

Code	Description	055	075	100
FBK	CP15+0,5° valve plate, nested t- bar springs, Only For HCEDC Control		●	●
FBL	CP15+0,5° valve plate, Only For HCEDC Control		●	●
MIL	CP15+0,5° valve plate, For Mixer Truck, Only For HCEDC Control		●	●
MIX	CP15+0,5° valve plate, For Mixer Truck	●	●	●
MJX	CP15+0,5° valve plate, Not For Transit Mixer Application	●	●	●
MKX	CP15+0,5° valve plate, nested t- bar springs	●	●	●

Y/Z - High Pressure Setting

Code	Description	055	075	100
26	260 bar	●	●	●
29	290 bar	●	●	●
32	320 bar	●	●	●
35	350 bar	●	●	●

K - Charge Pressure Setting

Code	Description	055	075	100
20	20 bar	●	●	●
24	24 bar	●	●	●

Control Options

3-Position Electric Control(FNR), Options: DD

The 3-Position (FNR) control uses an electric input signal to switch the pump to a full stroke position. To use the FNR control in a PLUS+1 Guide application, download HWD file **10106826** from www.Danfoss.com/PLUS+1.

W Warning

Avoid designing a system which places the swashplate into full stroke when control operation is blocked by contamination.

Solenoid connector

Solenoid plug face for DIN 43650 connector

DANFOSS
mating parts kit
Part No. K09129

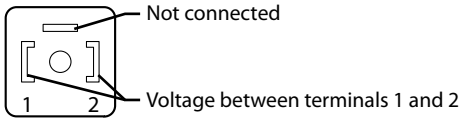

Pump displacement vs. electrical signal

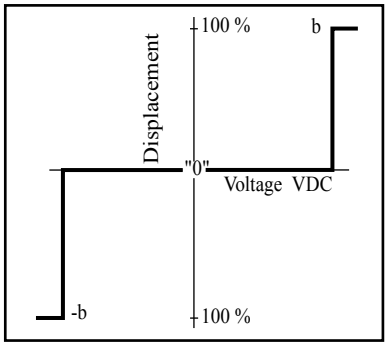

P102 023

3-position electric control hydraulic schematic

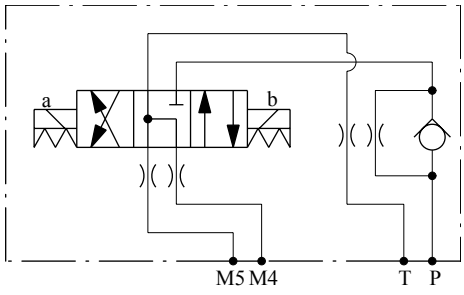

P102021

Control Options

Solenoid Data

Code	Voltage	Current	Connector
DC	12 Vdc	340 mA	DIN 46350
DD	24 Vdc	170 mA	DIN 46350

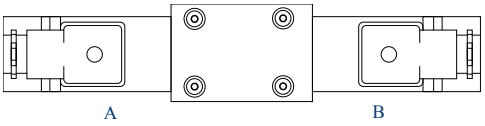

P108 495E

Response time

The time required for the pump to change from zero to full flow (acceleration), or full flow to zero (deceleration), is a function of the size of the orifice, the charge pressure, valve plates and other vehicle dynamics.

A range of orifice sizes are available for the Series 90 FNR Control to assist in matching the rate of swashplate response to the acceleration and deceleration requirements of the application. Testing should be carried out to determine the proper orifice selection for the desired response. For more information regarding response time for individual orifices, please contact your Danfoss representative.

Pump output flow direction vs. control signal

Input shaft rotation	CW		CCW	
Signal at solenoid	A	B	A	B
Port A flow (M1)	Out	In	In	Out
Port B flow (M2)	In	Out	Out	In
Servo cylinder (side)	M5 (2)	M4 (1)	M5 (2)	M4 (1)

W Warning

Avoid designing a system which puts the swashplate into full stroke when control operation is blocked by contamination.

Control Options

Manual Displacement Control (MDC), Options: MA, MS, LU, LW

The manual displacement control converts a mechanical input signal to a hydraulic signal that tilts the cradle swashplate through an angular rotation varying the pump's displacement from full displacement in one direction to full displacement in the opposite direction.

The manual displacement control has a mechanical feedback mechanism which moves a servo valve in the proper relationship to the input signal and the angular position of the swashplate. The control is designed so that the angular rotation of the swashplate is proportional to the mechanical input signal. The control is designed with an internal override mechanism which allows the mechanical input to be moved at a faster rate than the movement of the swashplate without damage to the control.

Features and Benefits

- Precision parts provide repeatable, accurate displacement settings with a given input signal.
- The manual displacement control is a high gain control: With only small movement of the control handle (input signal), the servo valve moves to full open position porting maximum flow to the servo cylinder. This is a high response system with low input force.
- The integral override mechanism allows rapid changes in input signal without damaging the control mechanism.
- Precision parts provide repeatable, accurate displacement settings with a given input signal.
- The double-acting servo piston is coupled to a spring centering mechanism. The servo control valve is spring centered such that with no input signal the servo valve is open centered and thus no fluid is ported to the servo cylinder.

Benefits:

- - Pump returns to neutral after prime mover shuts down.
- - Pump returns to neutral if external control linkage fails at the control handle or if there is a loss of charge pressure.

Manual displacement control schematic

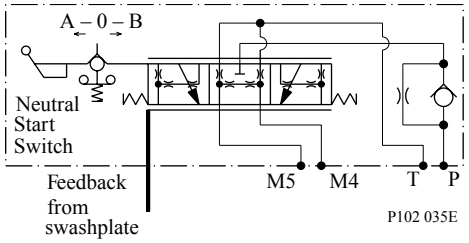

Cross-section

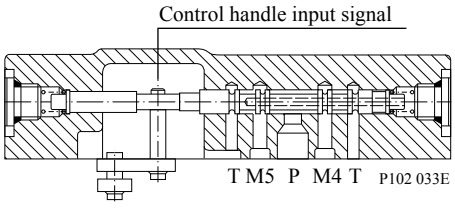

External Control Handle Requirements

- Torque required to move handle to maximum displacement is 0.68 to 0.9 N•m [6 to 8 lbf•in].
- Torque required to hold handle at given displacement is 0.34 to 0.57 N•m [3 to 5 lbf•in].
- Torque required to overcome the override mechanism is 1.1 to 2.3 N•m [10 to 20 lbf•in] with the maximum torque required for full forward to full reverse movement.
- Maximum allowable input torque is 17 N•m [150 lbf•in].

Pump displacement vs. control lever rotation

Control Options

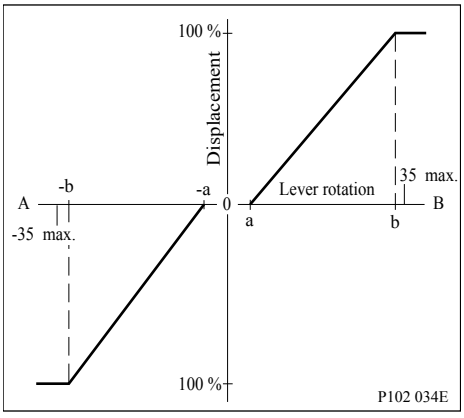

Control lever rotation range

a	0,5° - 4.5°
b	24° - 30°

Pump output flow direction vs. Control handle rotation

Input shaft rotation	CW		CCW	
Handle rotation	A	B	A	B
Port A flow (M1)	Out	In	In	Out
Port B flow (M2)	In	Out	Out	In
Servo cylinder (side)	M5 (2)	M4 (1)	M5 (2)	M4 (1)

Refer to*Installation Drawings* on page 40 for handle connection requirements

MDC with Neutral Start Switch (NSS)

The neutral start switch (NSS) stops the prime mover from starting unless the pump is in neutral. When the control is not in neutral position, the switch is disengaged, and the prime mover will not start. When the control is in neutral position, the switch is engaged, allowing the prime mover to start.

MDC with neutral start switch

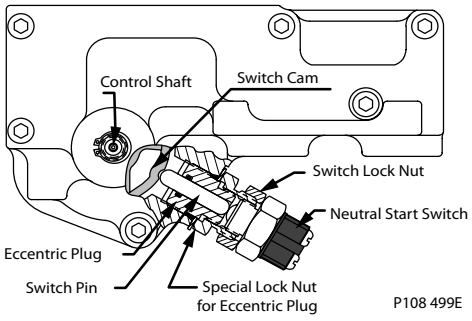

Control Options

High Current Electric Displacement Control (HCEDC); Options A4, A5

The Electrical Displacement Control (EDC) consists of a pair of proportional solenoids on each side of a three-position, four-way porting spool. The proportional solenoid applies a force input to the spool,which ports hydraulic pressure to either side of a double acting servo piston.

Differential pressure across the servo piston rotates the swash-plate, changing the pump's displacement from full displacement in one direction to full displacement in the opposite direction. A serviceable 125µm screen is located in the supply line immediately before the control porting spool.

Under some circumstances, such as contamination, the control spool could stick and cause the pump to stay at some displacement.

EDC schematic, feedback from swash-plate

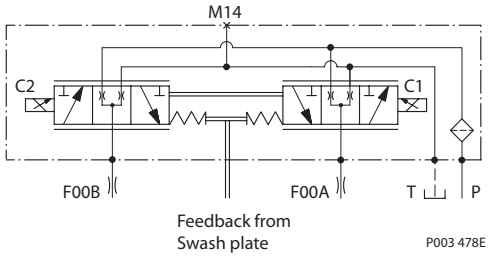



EDC Control Signal Requirements

Pump displacement vs. control current

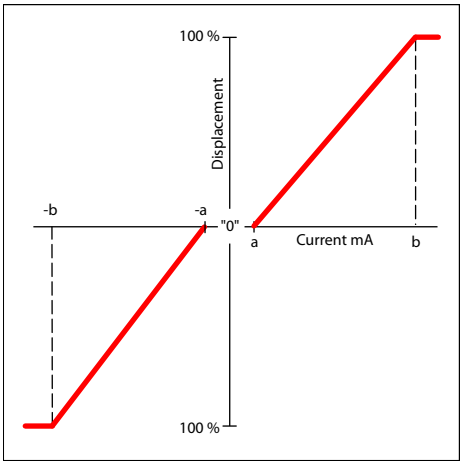

EDC control current

Voltage	a*	b	Pin connections
12 V	710 mA	1640 mA	any order
24 V	352 mA	820 mA	

* Factory test current, for vehicle movement or application actuation expect higher or lower value.

Control Options

Connectors

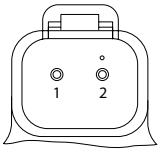

P003 480

Description	Quantity	Ordering Number
Mating Connector	1	DEUTSCH DT06-2S
Wedge Lock	1	DEUTSCH W25
Socket Contact (16 and 18 AWG)	2	DEUTSCH 0462-201-16141
Danfoss mating connector kit	1	K29657

EDC solenoid data

Description		12 V	24 V
Maximum current		1800 mA	920 mA
Nominal coil resistance	@ 20 °C [68 °F]	3.66 Ω	14.20 Ω
	@ 80 °C [176 °F]	4.52 Ω	17.52 Ω
Inductance		33 mH	140 mH
PWM signal frequency	Range	70 – 200 Hz	
	Recommended*	100 Hz	
IP Rating	IEC 60 529	IP 67	
	DIN 40 050, part 9	IP 69K with mating connector	
Connector color		Black	

* PWM signal required for optimum control performance.

Pump output flow direction vs. control signal

Shaft rotation	CW		CCW	
Coil energized*	**C1**	**C2**	**C1**	**C2**
Port A	out	in	in	out
Port B	in	out	out	in
Servo port pressurized	M4	M5	M4	M5

* For coil location see Installation drawings.

Features and Options

Multi-Function Valves

Overpressure protection

The Series 90 pumps are designed with a sequenced pressure limiting system and high pressure relief valves. When the preset pressure is reached, the pressure limiter system acts to rapidly de-stroke the pump to limit the system pressure. For unusually rapid load application, the high pressure relief valve is also available to limit the pressure level. The pressure limiter sensing valve acts as the pilot for the relief valve spool, such that the relief valve is sequenced to operate above the pressure limiter level.

Both the pressure limiter sensing valves and relief valves are built into the multi-function valves located in the pump endcap. The sequenced pressure limiter/high pressure relief valve system in the Series 90 provides an advanced design of overpressure protection.

The pressure limiter avoids system overheating associated with relief valves and the sequenced relief valves are available to limit pressure spikes which exist in severe operating conditions.

Pressure limiting function

When set pressure is exceeded, the pressure sensing valve (A) flows oil through passage (B) and across an orifice in the control spool raising pressure on the servo which was at low pressure. Servo pressure relief valves (C) limit servo pressure to appropriate levels. The pressure limiter action cancels the input command of the displacement control and tends to equalize servo pressure. Swashplate moments assist to change the displacement as required to maintain system pressure at the set point. The HPRV is always set 30 bar above the pressure limiter setting.

HPRVs are factory set at a low flow condition. Any application or operating condition which leads to elevated HPRV flow will cause a pressure rise with flow above a valve setting. Consult factory for application review. Excessive operation of the HPRV will generate heat in the closed loop and may cause damage to the internal components of the pump.

Multifunction valve, pressure limiter, pressure regulation, option 1

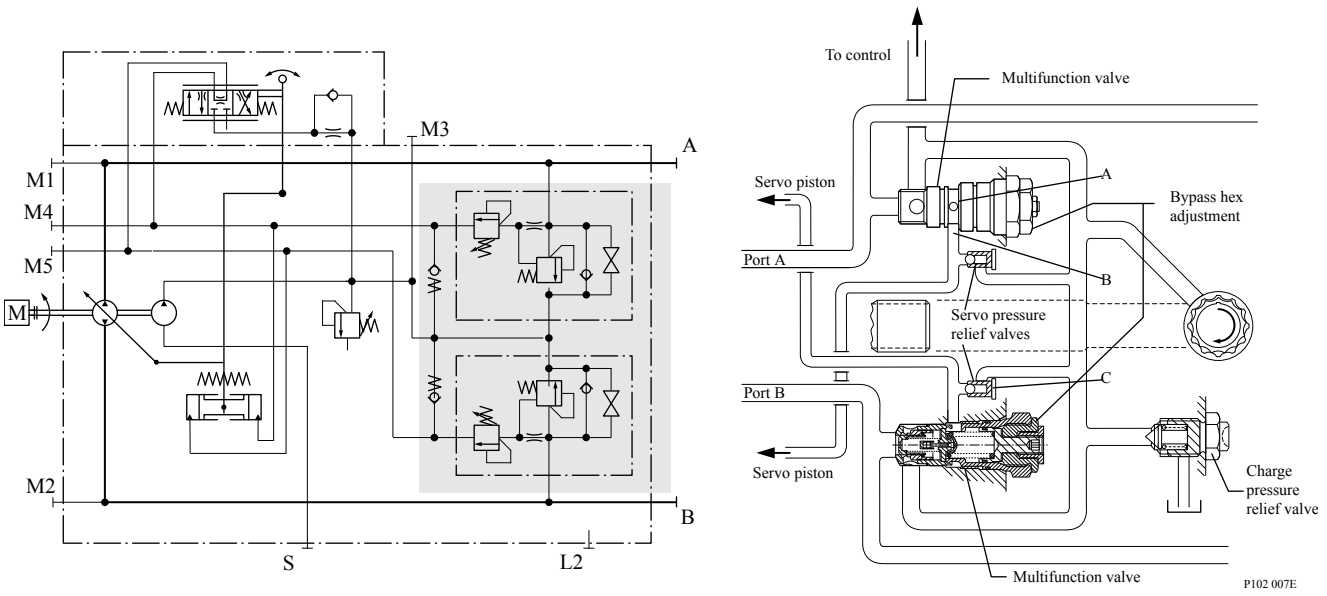

Features and Options

Bypass Function

In some applications it is desirable to bypass fluid around the variable displacement pump when pump shaft rotation is either not possible or not desired. For example, an inoperable vehicle may be moved to a service or repair location or winched onto a trailer without operating the prime mover. To provide for this, Series 90 pumps are designed with a bypass function.

The bypass is operated by mechanically rotating the bypass hex on both multifunction valves three (3) turns counterclockwise (CCW). This connects working loop A and B and allows fluid to circulate without rotating the pump and prime mover.

W Warning

Excessive speeds and extended load/vehicle movement must be avoided while moving in bypass function. The load or vehicle should be moved not more than 20 % of maximum speed and for a duration not exceeding 3 minutes. Damage to drive motor(s) is possible. When the bypass function is no longer needed care should be taken to re-seat the HPRV hex plugs to the normal operating position.

W Warning

Possible pump and/or motor damage.

Bypass valves are intended for moving a machine or vehicle for very short distances at very slow speeds. They are NOT intended as tow valves.

Auxiliary Mounting Pads

Auxiliary mounting pad specifications

Mounting pad	Option code	Spline coupling	Frame size/Maximum torque N•m [lbf•ft]		
			055	075	100
SAE A	AB	9T 16/32	93 [69]	97 [72]	97 [72]
SAE B	BC	13T 16/32	204 [150]	211 [156]	211 [156]
SAE B-B	BB	15T 16/32	342 [252]	281 [207]	281 [207]
SAE C	CD	14T 12/24	408 [301]	447 [330]	447 [330]

Mating pump requirements

The accompanying drawing provides the dimensions for the auxiliary pump mounting flange and shaft.

Pump mounting flanges and shafts with the dimensions noted below are compatible with the auxiliary mounting pads on the Series 90 pumps. An O-ring is required when a pump is bolted to an aux pad. Refer to outline drawings for more details and O-ring dimensions.

The auxiliary flange cover seal is only used for product transportation. If there is no tandem pumps requirement, it is recommended to use pump without auxiliary flange option. If you need to use pump with auxiliary flange but not rear pump for a long time, Please contact Danfoss technical personnel.

Features and Options

Auxiliary pump mounting flange and shaft

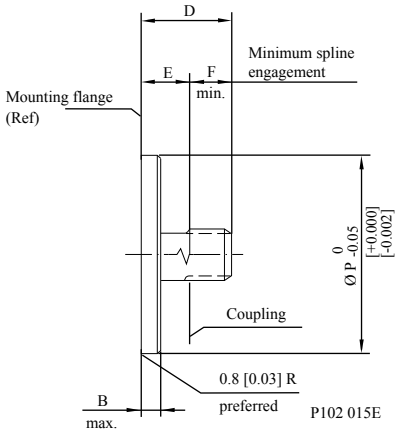

Auxiliary pump dimensions

Flange size	Units	P diameter	B maximum	D	F minimum
SAE A	mm [in]	82.55 [3.25]	7.4 [0.29]	32 [1.26]	13.5 [0.53]
SAE B		101.6 [4.00]	10.7 [0.42]	41 [1.61]	14.2 [0.56]
SAE B-B		101.6 [4.00]	10.7 [0.42]	46 [1.81]	16.1 [0.63]
SAE C		127.0 [5.00]	14.3 [0.56]	56 [2.20]	18.3 [0.72]

Displacement Limiter

All Series 90 pumps are designed with optional mechanical displacement (stroke) limiters.

The maximum displacement of the pump can be set independently for forward and reverse using the two adjustment screws.

W Warning

Adjusting the displacement limiter with the machine running may result in leakage. If backed out too far, the adjustment screw will come completely out of its threaded bore.

Displacement limiter location

Pump rotation	Displacement limiter mounted on servo side	Displacement limitation at high pressure side
Right [CW]	1	A
	2	B
Left [CCW]	1	B
	2	A

Features and Options

Displacement limiter

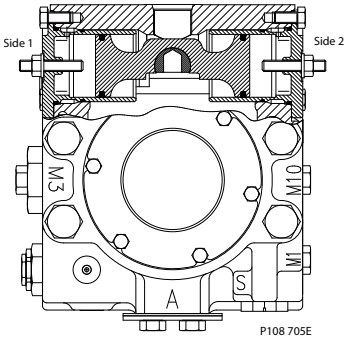

Frame size	Lock nut wrench size and torque	Adjusting screw wrench size internal hex	Approximate displacement change per revolution of adjusting screw
055	13 mm 24 N•m [18 lbf•ft]	4 mm	4.2 cm^3/rev [0.26 in^3/rev]
075	13 mm 24 N•m [18 lbf•ft]	4 mm	5.1 cm^3/rev [0.31 in^3/rev]
100	13 mm 24 N•m [18 lbf•ft]	4 mm	6.2 cm^3/rev [0.38 in^3/rev]

Shaft Torque

Shaft torque and spline lubrication

The **rated torque** is a measure of tooth wear and is the torque level at which a normal spline life of 2x109 shaft revolutions can be expected. The rated torque presumes a regularly maintained minimum level of lubrication via a moly-disulfide grease in order to reduce the coefficient of friction and to restrict the presence of oxygen at the spline interface. It is also assumed that the mating spline has a minimum hardness of Rc 55 and full spline depth. The rated torque is proportional to the minimum active spline length.

Maximum torque ratings are based on torsional fatigue strength considering 100.000 full load reversing cycles. However, a spline running in oil-flooded environment provides superior oxygen restriction in addition to contaminant flushing. The rated torque of a flooded spline can increase to that of the maximum published rating. A flooded spline would be indicative of a pump driven by a pump drive or plugged into an auxiliary pad of a pump.

Maintaining a spline engagement at least equal to the Pitch Diameter will also maximize spline life. Spline engagements of less than ¾ Pitch Diameter are subject to high contact stress and spline fretting.

Shaft torque for tapered shafts

The **rated torque** is based on the contact pressure between the shaft and hub surfaces with poor surface contact areas. With an increased quality of the contact areas, the contact pressure between the shaft and hub is increased and allows higher torque to be transmitted.

When a key is used for orientation of the hub on the shaft in conjunction with poor quality contact surfaces, the transmitted torque will drop significantly. This is due to the key carrying the torque, which limits the shaft torque carrying capability.

Maximum torque rating is based on an ideal contact area of 100 % and the retaining nut properly torqued. This allows for the highest contact pressure between the shaft and the hub.

Features and Options

Shaft Availability and Torque Ratings

Alignment between the mating spline's pitch diameters is another critical feature in determining the operating life of a splined drive connection. Plug-in, or rigid spline drive installations can impose severe radial loads on the shafts. The radial load is a function of the transmitted torque and shaft eccentricity. Increased spline clearance will not totally alleviate this condition; but, increased spline clearance will prevent mechanical interference due to misalignment or radial eccentricity between the pitch diameters of the mating splines. Spline life can be maximized if an intermediate coupling is introduced between the bearing supported splined shafts.

For multiple pump installations, consider load of the entire pump stack. All torques are additive. Include charge pumps loads when calculating torques.

Through torque diagram

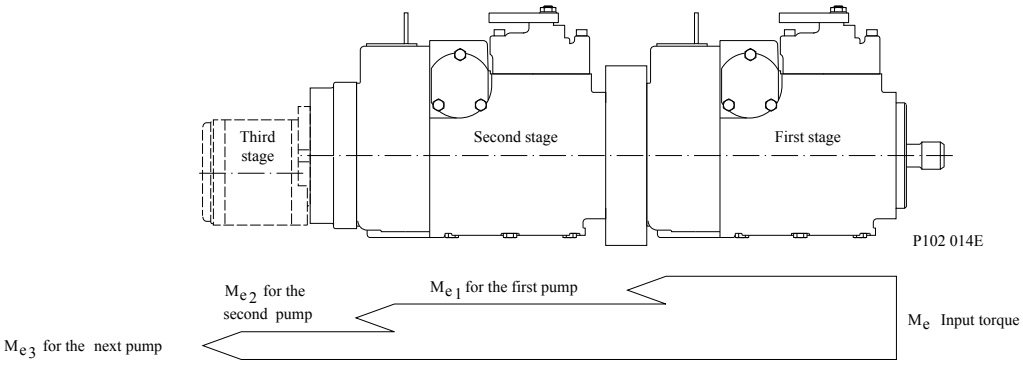

Refer to the outline drawings for shaft dimensions.

Torque required by auxiliary pumps is additive. Ensure requirements don't exceed shaft torque ratings.

Shaft availability and maximum input torque - splined shafts

Option code	Customer end	Frame size/Maximum torque N•m [lbf•ft]		
		055	075	100
C6	21T 16/32	1287 [949]	1214 [895]	1214 [895]
C7	23T 16/32	n/a	1625 [1218]	1822 [1344]
S1	14T 12/24	832 [613]	853 [629]	974 [718]

Tapered Shaft Customer Acknowledgement

W Warning

The customer is responsible for proper analysis, design, and quality of the mating female coupling, key, and applied torque on the nut. Torque must be transmitted by the taper fit between the shaft and mating coupling, not the key. Failure to properly analyze the nut torque required to create a robust joint could result in transmitting torque through the key which may lead to premature shaft failure.

The specified torque rating of the tapered shaft is based on the cross-sectional diameter of the shaft through the keyway and assumes proper clamp and fit between shaft and coupling. Danfoss guarantees the design and manufactured quality of the tapered shaft.

Danfoss has made provisions for the key in accordance to the ISO specification with the understanding that the key is solely to assist in the installation of the mating coupling.

Features and Options

Charge Pump

Charge flow is required on all Series 90 pumps applied in closed circuit installations. The charge pump provides flow to make up internal leakage, maintain a positive pressure in the main circuit, provide flow for cooling and filtration, replace any leakage losses from external valving or auxiliary systems, and to provide flow and pressure for the control system.

Many factors influence the charge flow requirements. These factors include system pressure, pump speed, pump swashplate angle, type of fluid, temperature, size of heat exchanger, length and size of hydraulic lines, control response characteristics, auxiliary flow requirements, hydrostatic motor type, etc.

Unusual application conditions may require a more detailed review of charge pump sizing. Charge pressure must be maintained at a specified level under all operating conditions to prevent damage to the transmission. Danfoss recommends testing under actual operating conditions to verify this.

Charge pump sizing/selection

In most applications a general guideline is that the charge pump displacement should be at least 10% of the total displacement of all components in the system. Unusual application conditions may require a more detailed review of charge flow requirements. Refer to *Selection of Drive line Components* **BC157786484430**, for a detailed procedure.

System features and conditions which may invalidate the 10% guideline include (but are not limited to):

- Continuous operation at low input speeds (< 1500 min^{-1} (rpm))
- High shock loading
- Excessively long system lines (> 3m [9.8 ft])
- Auxiliary flow requirements
- Use of low speed high torque motors
- High flushing flow

Contact your Danfoss representative for application assistance if your application includes any of these conditions.

Available charge pump sizes and speed limits

Code	Charge pump size cm^3 [in^3]	Rated speed min-1 (rpm)
C	14 [0.86]	4200
D	17 [1.03]	3900
E	20 [1.20]	3600
F	26 [1.60] (only for 130cc)	3300

Contact your Danfoss representative for application assistance if your application includes any of these conditions.

Charge pump flow and power curves

Charge pressure: 20 bar [350 psi]

Case drain: 80 °C (8.2 cSt) 180 °F (53 SUS)

Reservoir temperature: 70 °C (11 cSt) 160 °F (63 SUS)

Features and Options

Charge pump output flow

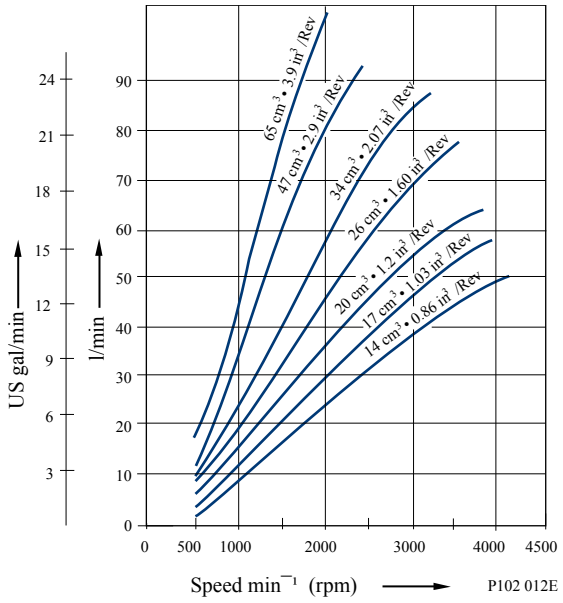

Charge pump power requirements

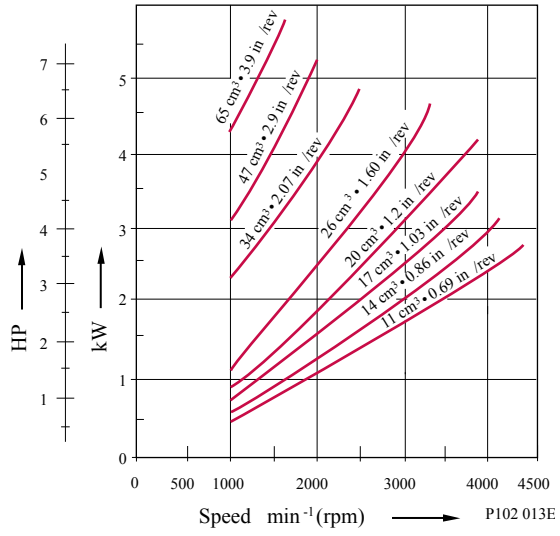

Features and Options

Speed Sensor

An optional speed sensor for direct measurement of speed is available.

A special magnetic ring is pressed onto the outside diameter of the cylinder block and a Hall effect sensor is located in the housing. The sensor accepts supply voltage and outputs a digital pulse signal in response to the speed of the ring. The output changes its high/low state as the north and south poles of the permanently magnetized speed ring pass by the face of the sensor. The digital signal is generated at frequencies suitable for microprocessor based controls. The sensor is available with different connectors.

To use the speed sensor in a PLUS+1 Guide application, download HWD file **10106825** from www.Danfoss.com/Plus1. To identify the sensors that are PLUS+1 compliant, please contact your Danfoss representative.

Electrical data

Description	Data	
Supply voltage (two ranges)	4.5 to 8.5 Vdc Regulated	7 to 32 Vdc Battery
Maximum operating current	20 mA at 1 Hz and 5 Vdc supply	
Required current	12 mA at 5 Vdc (no load)	
Output voltage	High state	Supply voltage minus 0.5 Vdc minimum (no load)
	Low state	0.5 Vdc, maximum (no load)
Maximum frequency	15 kHz	
Load	Ground	15 kHz
	Supply	15 kHz
Peak transient voltage	4.5 to 8.5 Vdc	80 Vdc for 2 milliseconds
	7 to 32 Vdc	300 Vdc for 2 milliseconds 200 Vdc for 100 milliseconds
Peak reverse voltage	4.5 to 8.5 Vdc	-15 Vdc continuous
	7 to 32 Vdc	-32 Vdc continuous

Environmental data

Description	Data
Operating and storage temperature	-40° to 110° C [-40° to 230° F]

For more information on the speed sensor, refer to *KPP Pulse Pickup (PPU) Technical Information* **11029257**.

W Warning

Do not energize the 4.5 to 8.5 Vdc sensor with 12 Vdc battery voltage. Use a regulated power supply. If you need to energize the sensor with battery voltage, contact your Danfoss representative for a special sensor.

Pulse frequency

	055	075	100
Pulse per revolution	52	58	63

Features and Options

Connector Pin Assignments

3 pin Deutsch Plug DT Series connector

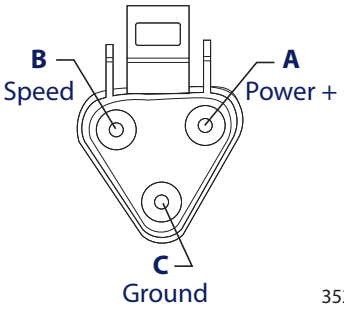

3523

4 pin Deutsch® Plug DT Series Connector

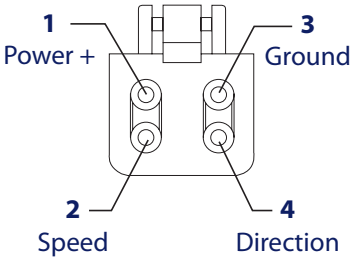

3525

3 or 4 pin Delphi Connector

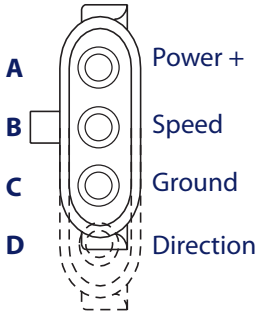

3524A

Packard Weather-Pack
4 pin
(Supplied Connector)

Mating Connector
No.: K03379

4 pin Turck Eurofast connector

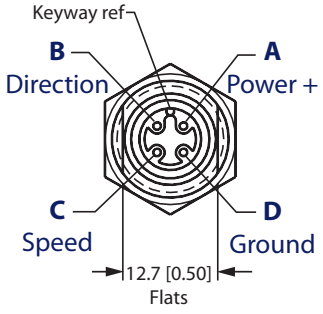

3526

Turck Eurofast Connector
4 pin
(Supplied Connector)

Mating Connector

straight	right angle
No.: K14956	No.: K14957

Installation Drawings

Frame Size 055 : MDC

Manual displacement control (MDC), endcap twin ports, option 80/8A

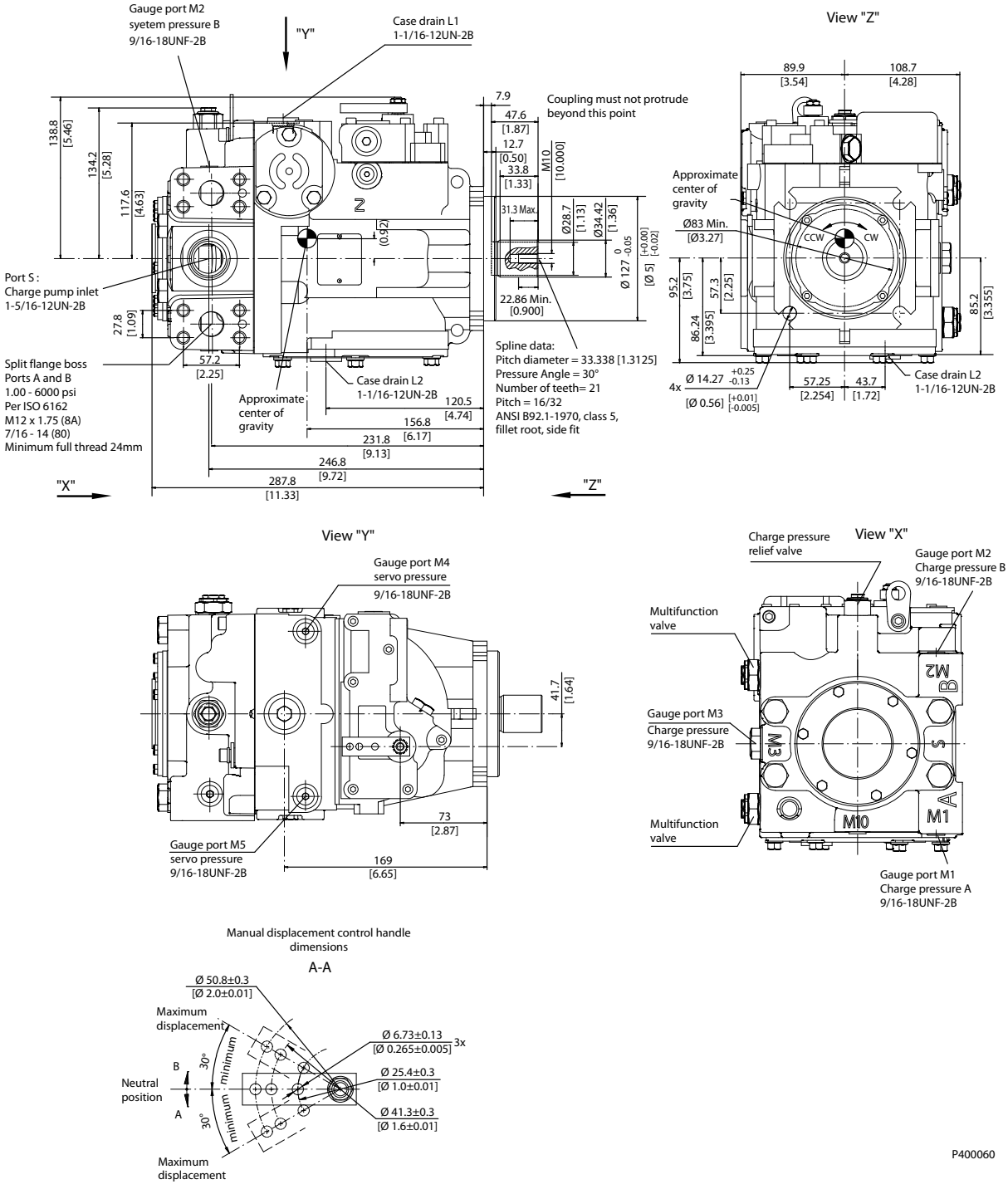

Installation Drawings

Frame Size 075 : MDC

Manual displacement control (MDC), endcap twin ports, option 80/8A

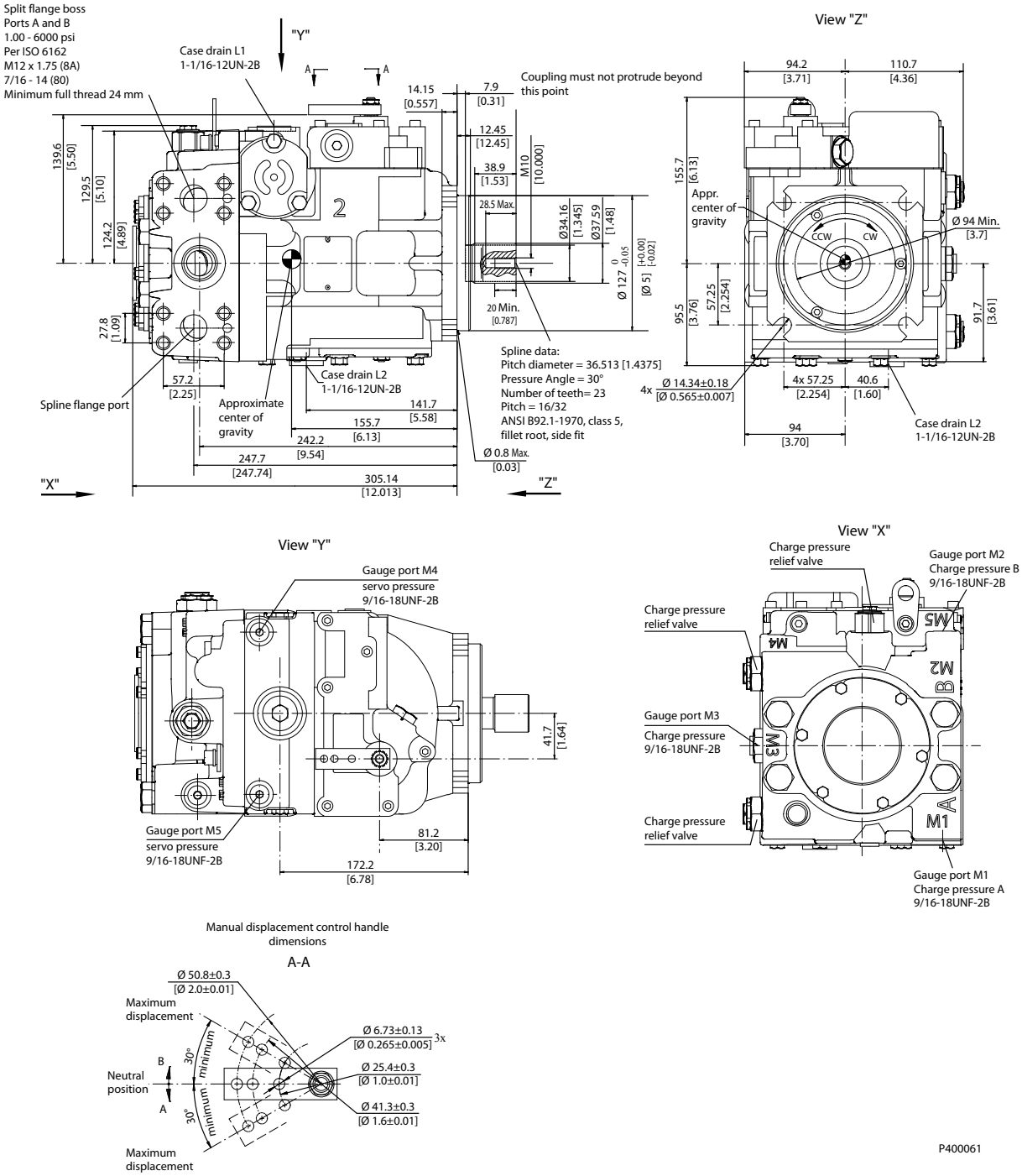

Installation Drawings

Frame Size 100 : MDC

Manual displacement control (MDC), endcap twin ports, option 80/8A

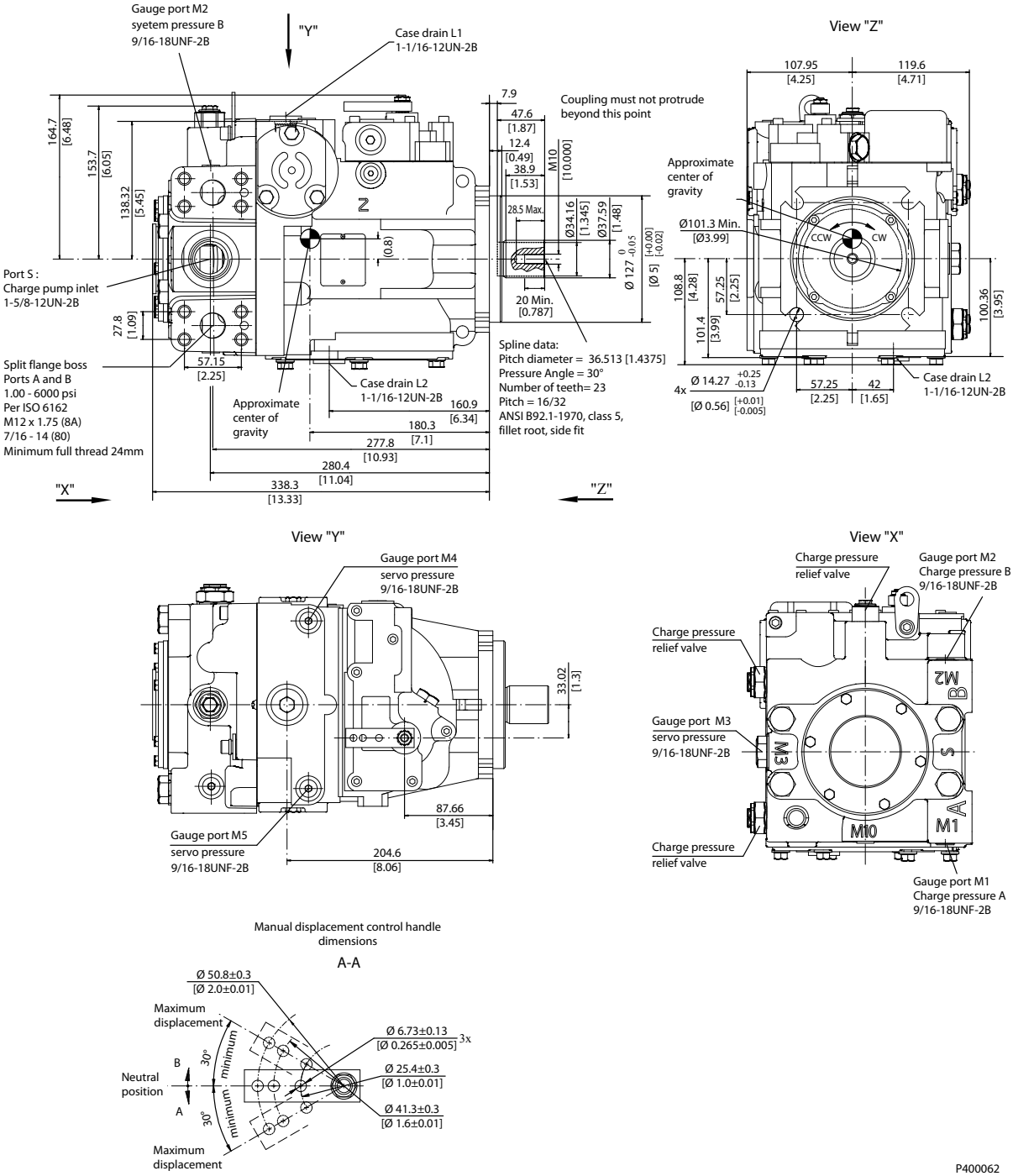

Installation Drawings

Frame Size 075 : HCEDC

High current electric displacement control (HCEDC), endcap twin ports, option 80

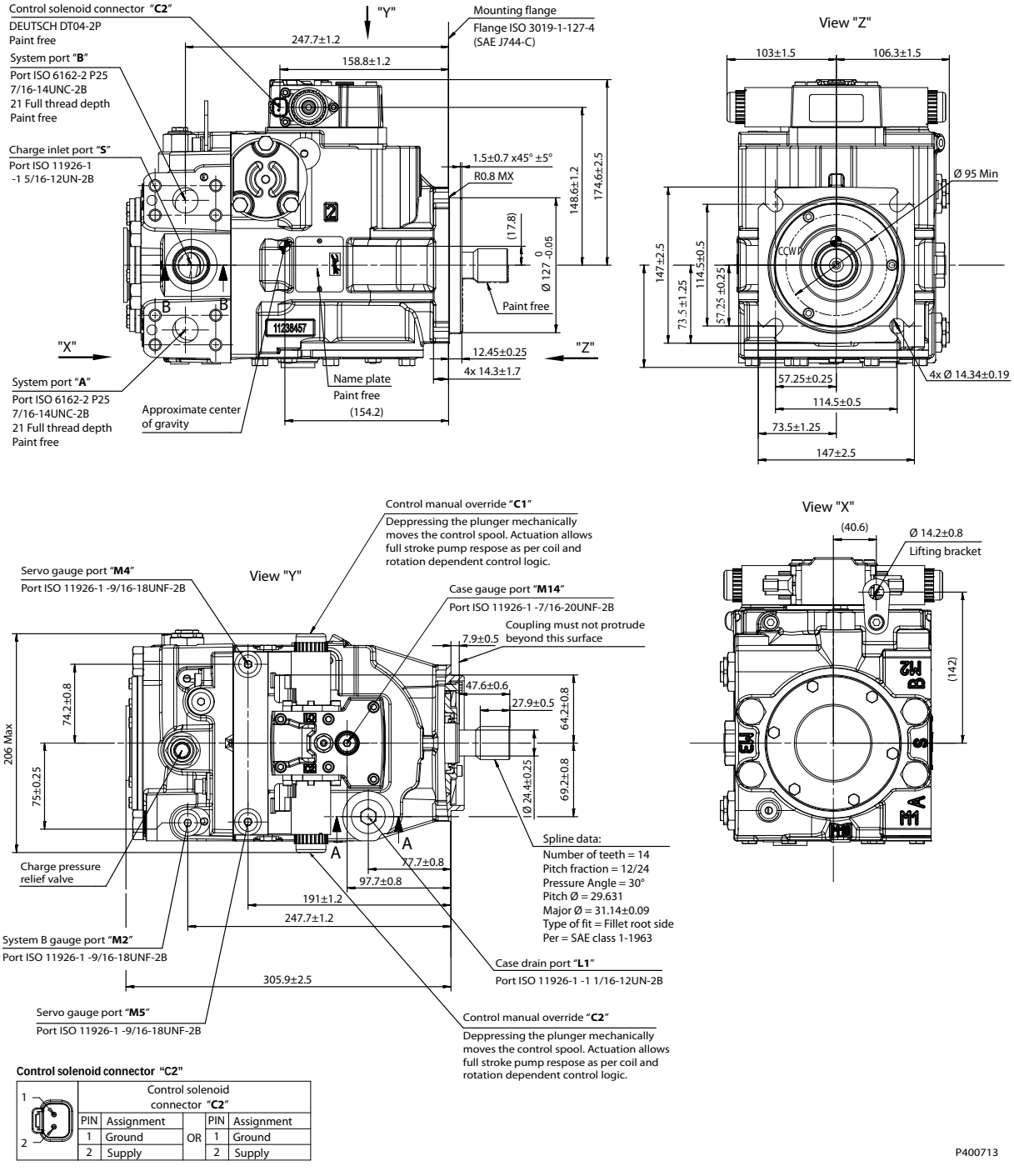

Control solenoid connector "C2"

	Control solenoid connector "C2"				
PIN	Assignment		PIN	Assignment
1	Ground	OR	1	Ground
2	Supply		2	Supply

Installation Drawings

Frame Size 100 : HCEDC

High current electric displacement control (HCEDC), endcap twin ports, option 80

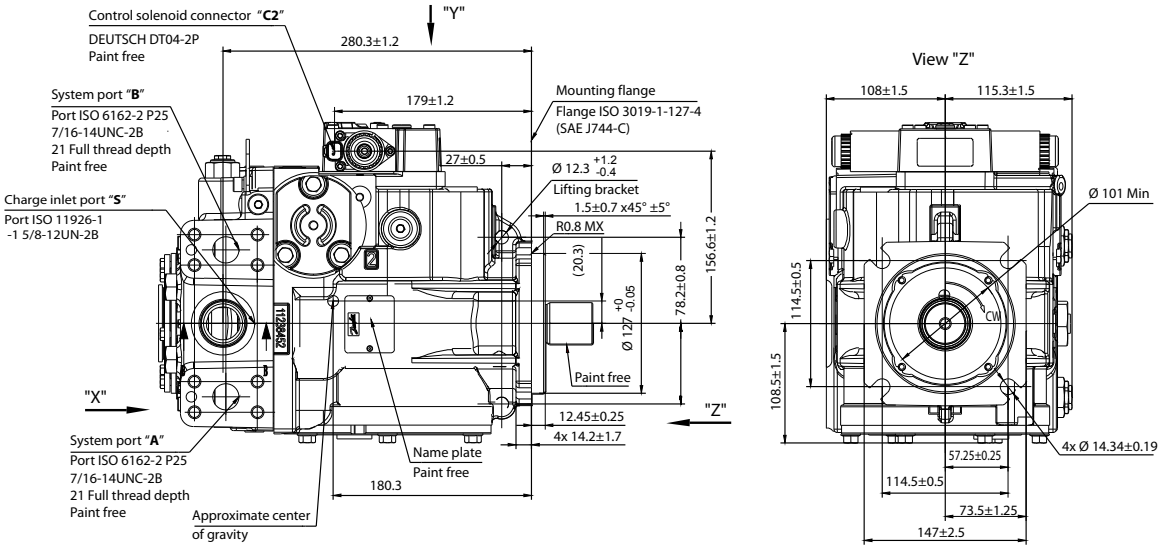

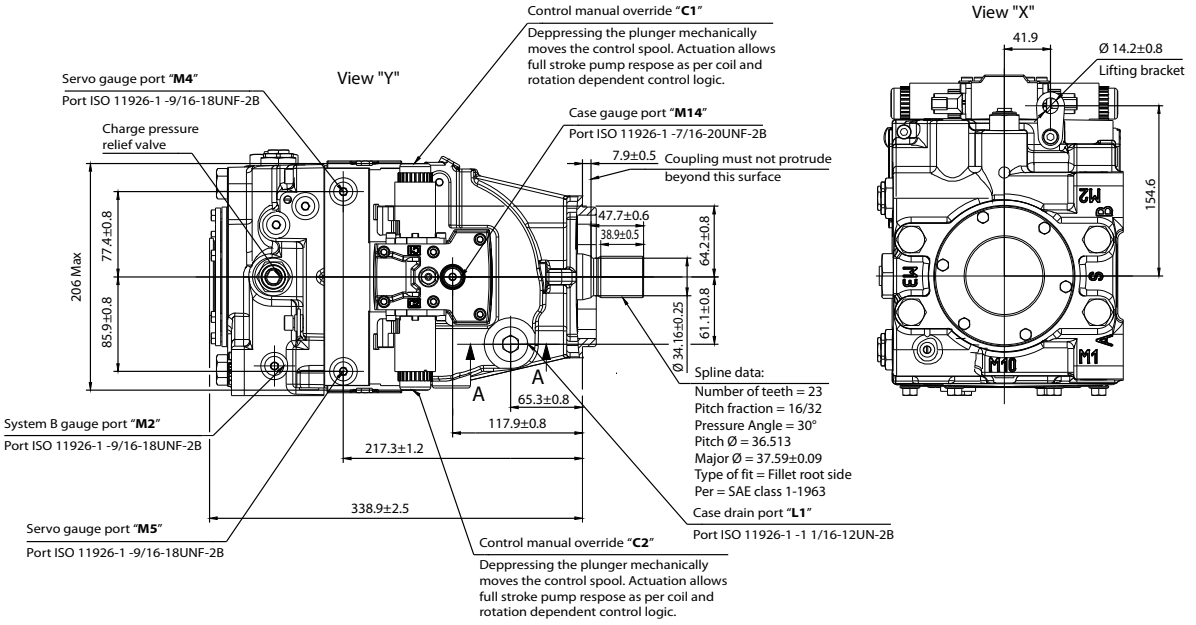

Control solenoid connector "C2"



Control solenoid connector "C2"					
PIN	Assignment		PIN	Assignment
1	Ground	OR	1	Ground
2	Supply		2	Supply

P400714

ENGINEERING TOMORROW

Products we offer:

- Cartridge valves
- DCV directional control valves
- Electric converters
- Electric machines
- Electric motors
- Gear motors
- Gear pumps
- Hydraulic integrated circuits (HICs)
- Hydrostatic motors
- Hydrostatic pumps
- Orbital motors
- PLUS+1® controllers
- PLUS+1® displays
- PLUS+1® joysticks and pedals
- PLUS+1® operator interfaces
- PLUS+1® sensors
- PLUS+1® software
- PLUS+1® software services, support and training
- Position controls and sensors
- PVG proportional valves
- Steering components and systems
- Telematics

Hydro-Gear
www.hydro-gear.com

Daikin-Sauer-Danfoss
www.daikin-sauer-danfoss.com

Danfoss Power Solutions is a global manufacturer and supplier of high-quality hydraulic and electric components. We specialize in providing state-of-the-art technology and solutions that excel in the harsh operating conditions of the mobile off-highway market as well as the marine sector. Building on our extensive applications expertise, we work closely with you to ensure exceptional performance for a broad range of applications. We help you and other customers around the world speed up system development, reduce costs and bring vehicles and vessels to market faster.

Danfoss Power Solutions – your strongest partner in mobile hydraulics and mobile electrification.

Go to www.danfoss.com for further product information.

We offer you expert worldwide support for ensuring the best possible solutions for outstanding performance. And with an extensive network of Global Service Partners, we also provide you with comprehensive global service for all of our components.

Local address:

Danfoss
Power Solutions (US) Company
2800 East 13th Street
Ames, IA 50010, USA
Phone: +1 515 239 6000

Danfoss
Power Solutions GmbH & Co. OHG
Krokamp 35
D-24539 Neumünster, Germany
Phone: +49 4321 871 0

Danfoss
Power Solutions ApS
Nordborgvej 81
DK-6430 Nordborg, Denmark
Phone: +45 7488 2222

Danfoss
Power Solutions Trading (Shanghai) Co., Ltd.
Building #22, No. 1000 Jin Hai Rd
Jin Qiao, Pudong New District
Shanghai, China 201206
Phone: +86 21 2080 6201

Danfoss can accept no responsibility for possible errors in catalogues, brochures and other printed material. Danfoss reserves the right to alter its products without notice. This also applies to products already on order provided that such alterations can be made without subsequent changes being necessary in specifications already agreed.
All trademarks in this material are property of the respective companies. Danfoss and the Danfoss logotype are trademarks of Danfoss A/S. All rights reserved.