ORDERING CODE - T6E SERIES INDUSTRIAL APPLICATION

Model No. **T6E - 066 - 3 R 00 - A 1**

Series

Cam ring
(Delivery at 0 bar & 1500 r.p.m.)
042 = 198,5 l/min
045 = 213,6 l/min
050 = 237,7 l/min
052 = 247,2 l/min
062 = 295,0 l/min
066 = 319,9 l/min
072 = 340,6 l/min

Type of shaft
1 = keyed (SAE CC)
2 = keyed (no SAE)
3 = splined (SAE C)
4 = splined (SAE CC)

Modification

Seal class
1 = S1 (for mineral oil)
4 = S4 (for resistant fluids)
5 = S5 (for mineral oil and fire resistant fluids)

Design letter

Porting combination
00 = standard

Direct. of rotation (view on shaft end)
R = clockwise
L = counter-clockwise

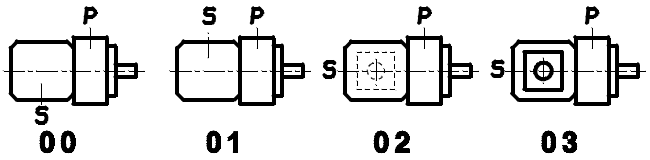

P = Pressure port
S = Suction port

INTERNAL LEAKAGE (TYPICAL)

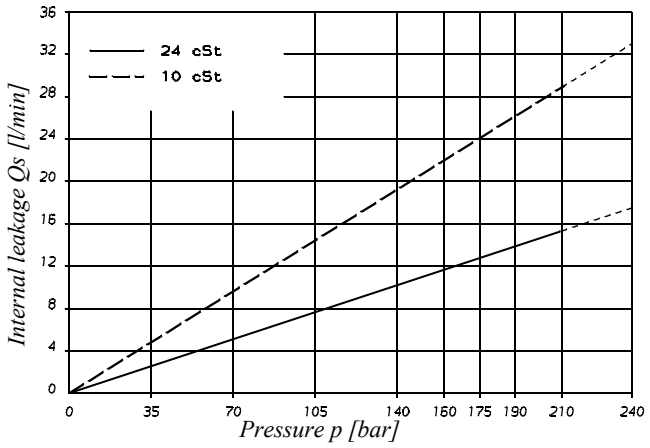

NOISE LEVEL (TYPICAL)

T6E - 050

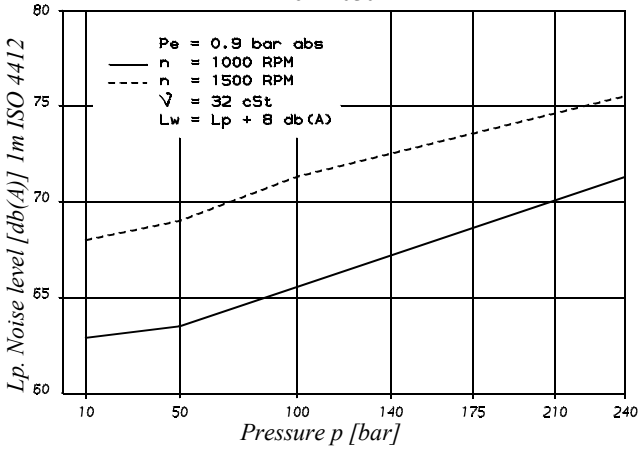

POWER LOSS HYDROMECHANICAL (TYPICAL)

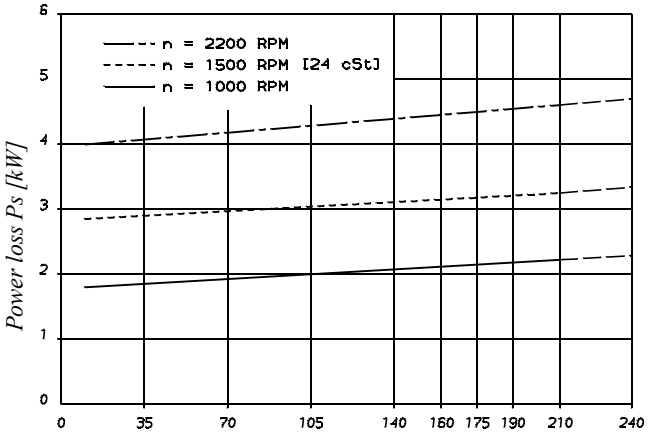

PERMISSIBLE RADIAL LOAD

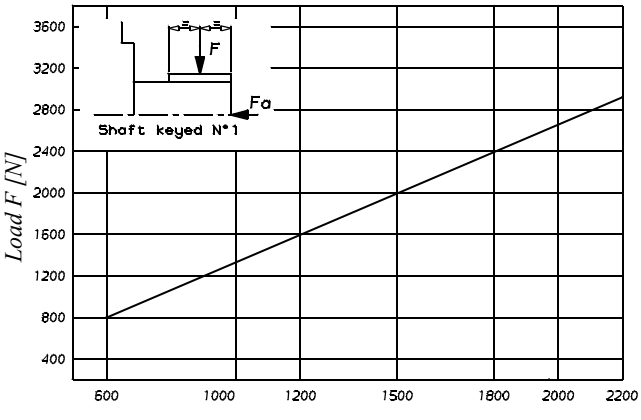

Maximum permissible axial load Fa = 2000 N

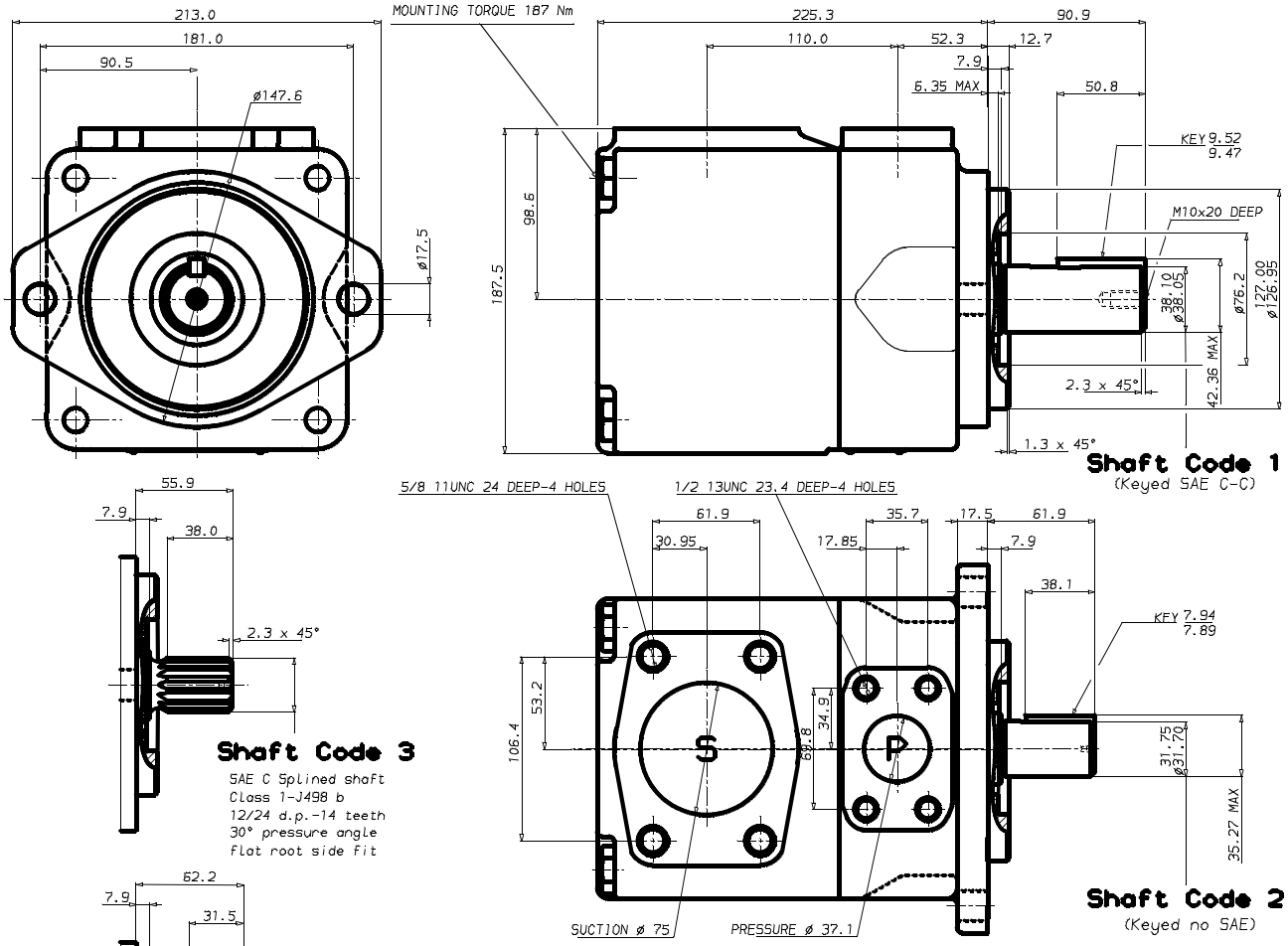

Shaft torque limits [ml/rev x bar]		
Pump	**Shaft**	**V x p max.**
T6E	2	34590

OPERATING CHARACTERISTICS - TYPICAL [24 cSt]

Series	Volumetric Displacement Vi	Speed n [R.P.M.]	Flow qv_e [l/min]			Input power P [kW]		
			p = 0 bar	p = 140 bar	p = 240 bar	p = 7 bar	p = 140 bar	p = 240 bar
042	132,3 ml/rev	1000 1500	132,3 198,5	122,3 188,5	115,2 181,3	3,2 5,2	32,9 49,4	55,2 82,6
045	142,4 ml/rev	1000 1500	142,4 213,6	132,4 203,6	125,3 196,5	3,4 5,4	35,3 52,9	59,2 88,7
050	158,5 ml/rev	1000 1500	158,5 237,7	148,5 227,7	141,4 220,6	3,5 5,7	39,0 58,5	65,6 98,3
052	164,8 ml/rev	1000 1500	164,8 247,2	154,8 237,2	147,7 230,1	3,6 5,8	40,5 60,8	68,2 102,1
062	196,7 ml/rev	1000 1500	196,7 295,0	186,7 285,0	179,6 277,9	4,0 6,4	47,9 71,9	80,9 121,3
066	213,3 ml/rev	1000 1500	213,3 319,9	203,3 309,9	196,2 302,8	4,2 6,7	51,8 77,7	87,6 131,2
072	227,1 ml/rev	1000 1500	227,1 340,6	217,1 330,6	210,0 323,5	4,3 6,9	55,0 82,6	93,1 139,5

Port connection can be furnished with metric threads.