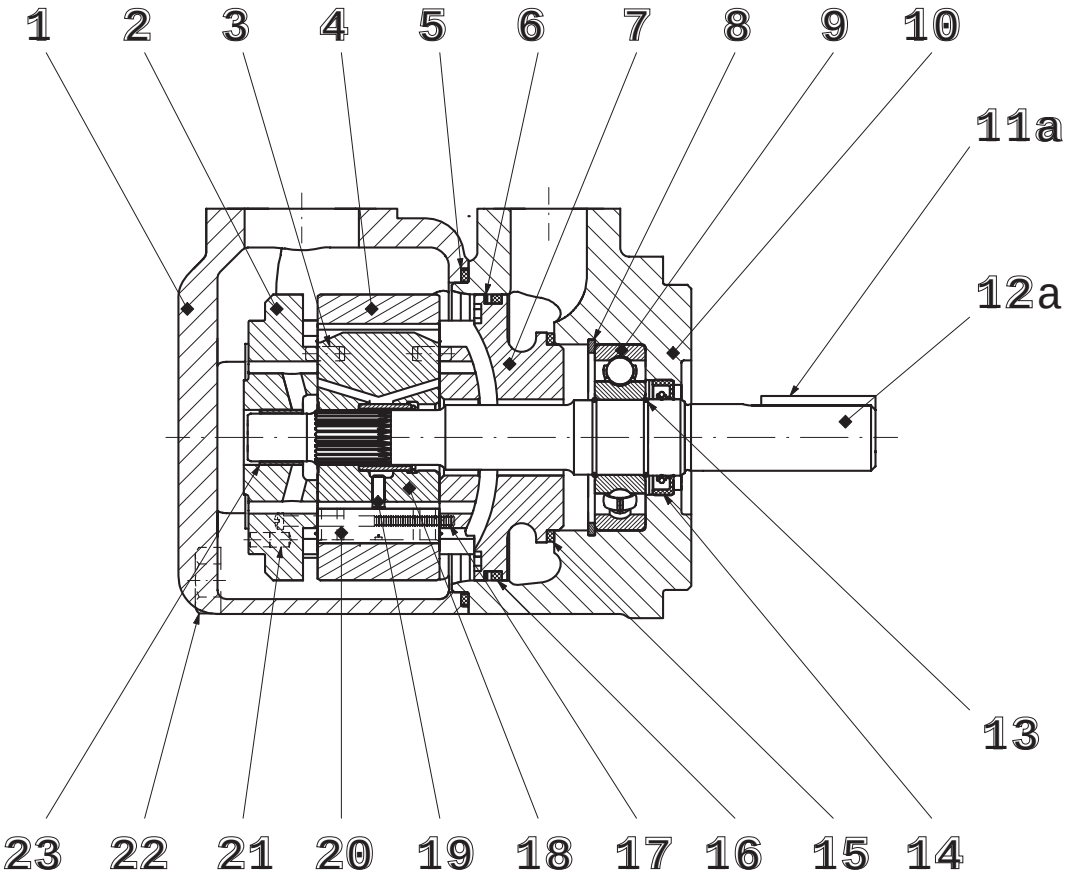

Hydraulic Pumps - Service Information
T6C / T6CM

Denison Vane - Flügelzellen - Palettes - Palette - Paletas

Parker

ENGINEERING YOUR SUCCESS.

T6C Industrial

	Item - Pos. - Réf. - Pos.
	22
Mounting torque Anziehdrehmoment Couple de serrage Coppia di serragio Par de apriete	159 Nm 117 ft.lbs

Recommended repair kits and assy's are bold printed
Empfohlene Austausch - Baugruppen sind fett gedruckt
Les pochettes de rechange recommandées sont imprimées en caractères gras
I kit di ricambio consigliati sono indicati in grassetto
Los juegos de reparacion recommendados y los conjuntos, estan en negrita

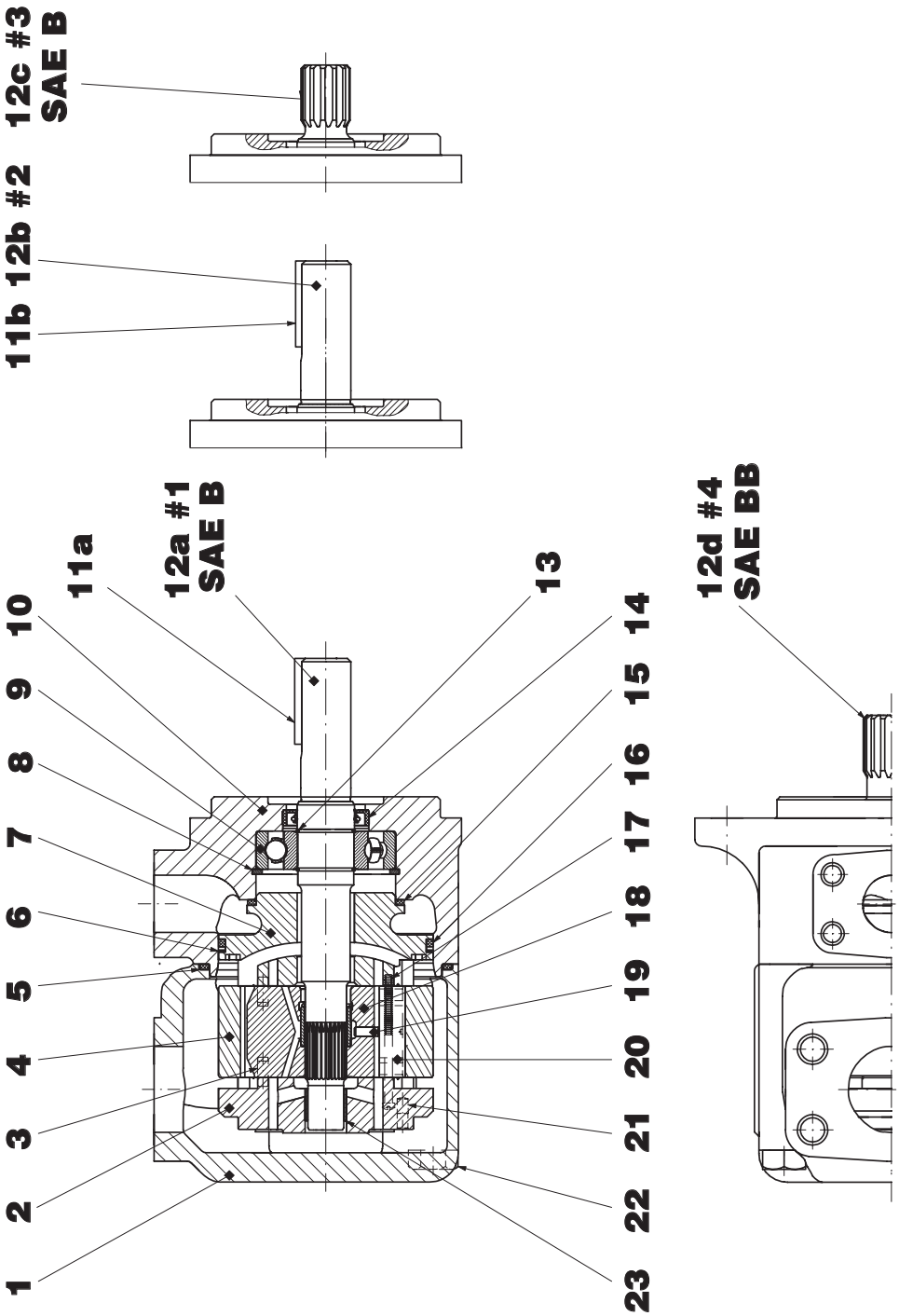

Parker Hannifin Manufacturing France SAS
VPDE, Denison Vane Pumps
Vierzon - France

T6CM Mobile

	Item - Pos. - Réf. - Pos.
	22
Mounting torque	159 Nm 117 ft.lbs
Anziehdrehmoment	
Couple de serrage	
Coppia di serragio	
Par de apriete	

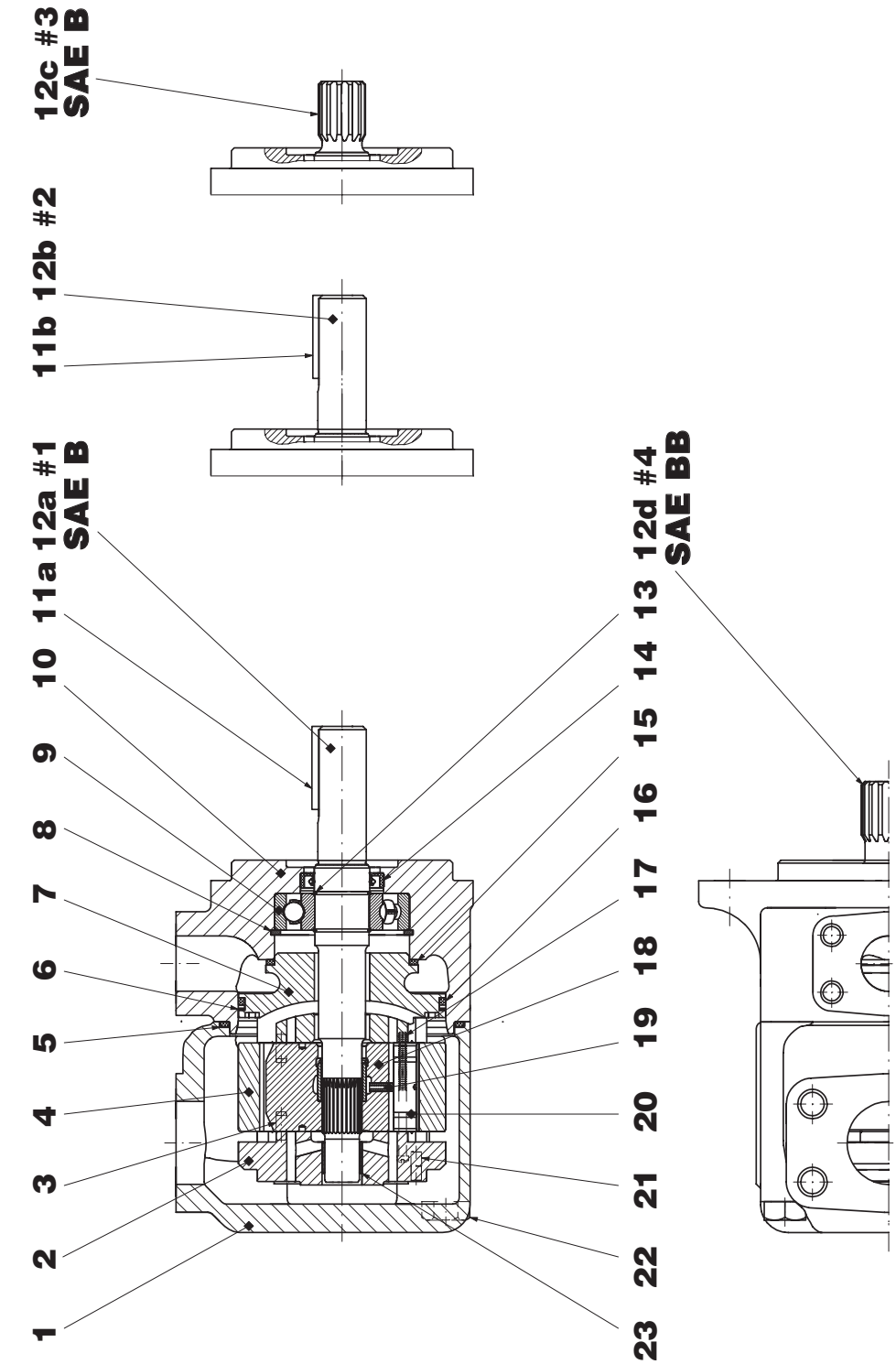

Recommended repair kits and assy's are bold printed
Empfohlene Austausch - Baugruppen sind fett gedruckt
Les pochettes de rechange recommandées sont imprimées en caractères gras
I kit di ricambio consigliati sono indicati in grassetto
Los juegos de reparacion recommendados y los conjuntos, estan en negrita

Parker Hannifin Manufacturing France SAS
VPDE, Denison Vane Pumps
Vierzon - France

Item Pos. Réf. Pos.	Description Descrizione	Benennung Descripcion	Description		Part N° Teil Nr. Code N° Referencia T6C	Part N° Teil Nr. Code N° Referencia T6CM	Qty Stück Qté Cant.
1	Housing (standard) Corpo (standard)	Gehäuse (Standard) Cuerpo (estandar)	Carter (standard)			034-48564-0	1
2	Port plate-rear Piatto distributore	Steuerplatte Plato distribuidor trasero	Plaque arrière	AG		034-59047-0	1
3	Dowel pin Spina	Zentrierstift Pasador	Goupille	A		324-21208-0	2
4	Cam ring 003 Anello camma 003	Hubring 003 Aro volumetrico 003	Came 003	A		034-59050-0	1
	Cam ring 005 Anello camma 005	Hubring 005 Aro volumetrico 005	Came 005	A		034-59051-0	1
	Cam ring 006 Anello camma 006	Hubring 006 Aro volumetrico 006	Came 006	A		034-59052-0	1
	Cam ring 008 Anello camma 008	Hubring 008 Aro volumetrico 008	Came 008	A		034-59053-0	1
	Cam ring 010 Anello camma 010	Hubring 010 Aro volumetrico 010	Came 010	A		034-59054-0	1
	Cam ring 012 Anello camma 012	Hubring 012 Aro volumetrico 012	Came 012	A		034-66595-0	1
	Cam ring 014 Anello camma 014	Hubring 014 Aro volumetrico 014	Came 014	A		034-59206-0	1
	Cam ring 017 Anello camma 017	Hubring 017 Aro volumetrico 017	Came 017	A		034-59207-0	1
	Cam ring 020 Anello camma 020	Hubring 020 Aro volumetrico 020	Came 020	A		034-66607-0	1
	Cam ring 022 Anello camma 022	Hubring 022 Aro volumetrico 022	Came 022	A		034-59208-0	1
	Cam ring 025 Anello camma 025	Hubring 025 Aro volumetrico 025	Came 025	A		034-59209-0	1
	Cam ring 028 Anello camma 028	Hubring 028 Aro volumetrico 028	Came 028	A		034-59245-0	1
	Cam ring 031 Anello camma 031	Hubring 031 Aro volumetrico 031	Came 031	A		034-66843-0	1
5	O.ring Guarnizione	Dichtring Guarnizione torica	Joint torique	AB		671-00244-0	1
6	Back-up ring Anello anti-estrusione	Stützring Anillo	Bague anti-extrusion	AB		618-00010-3	1
7	Port plate-pressure Piatto distributore anter.	Steuerplatte Plato distribuidor-presión	Plaque pression	A		034-66453-0	1
8	Retaining ring Anello elastico	Sicherungsring Anillo de retención	Circlips			356-30244-0	1
9	Ball bearing Cuscinetto a sfere	Kugellager Cojinete de bolas	Roulement à billes			230-82054-0	1
10	Mounting cap (standard) Coperchio (standard)	Deckel (Standard) Tapa de montage (estandar)	Chapeau de montage (standard)			034-48565-0	1

Parker Hannifin Manufacturing France SAS
VPDE, Denison Vane Pumps
Vierzon - France

Item Pos. Réf. Pos.	Description Descrizione	Benennung Descripcion	Description		Part N° Teil Nr. Code N° Referencia T6C	Part N° Teil Nr. Code N° Referencia T6CM	Qty Stück Qté Cant.
11a	Key (code 1) Chiavetta (codice 1)	Paβfeder (Typ 1) Chaveta (codigo 1)	Clavette (code 1)	C	034-48690-0		1
11b	Key (code 2) Chiavetta (codice 2)	Paβfeder (Typ 2) Chaveta (codigo 2)	Clavette (code 2)	D	034-49622-0		1
12a	Shaft (keyed) (code 1) (SAE B) Albero a chiavetta (codice 1) (SAE B)	Paβfederwelle (Typ 1) (SAE B) Eje chaveteado (codigo 1) (SAE B)	Arbre à clavette (code 1) (SAE B)	C	034-70814-0		1
12b	Shaft (keyed) (code 2) Albero a chiavetta (codice 2)	Paβfederwelle (Typ 2) Eje chaveteado (codigo 2)	Arbre à clavette (code 2)	D	034-70880-0		1
12c	Shaft (splined) (code 3) (SAE B) Albero scanalato (codice 3) (SAE B)	Vielkeilwelle (Typ 3) (SAE B) Eje estriado (codigo 3) (SAE B)	Arbre à cannelures (code 3) (SAE B)	E	034-70815-0		1
12d	Shaft (splined) (code 4) (SAE BB) Albero scanalato (codice 4) (SAE BB)	Vielkeilwelle (Typ 4) (SAE BB) Eje estriado (codigo 4) (SAE BB)	Arbre à cannelures (code 4) (SAE BB)	F	034-59426-0		1
13	Round section ring Anello	Sicherungsring Anillo tórico	Anneau		034-70777-0		2
14	Shaft seal (S1 - 0,7 bar) Paraolio (S1 - 0,7 bar)	Simmerring (S1 - 0,7 bar) Reten eje (S1 - 0,7 bar)	Joint d'arbre (S1 - 0,7 bar)	B	620-82012-0		1
	Shaft seal (S4 - S5 - 7 bar) Paraolio (S1 - 7 bar)	Simmerring (S4 - S5 - 7 bar) Reten eje (S4 - S5 - 7 bar)	Joint d'arbre (S4 - S5 - 7 bar)	B	620-82068-0		1
15	Sq. section seal Guarnizione	Dichtring Junta seccion cuadrada	Joint section carrée	AB	691-10229-0		1
16	Sq. section seal Guarnizione	Dichtring Junta seccion cuadrada	Joint section carrée	AB	691-10238-0		1
17	Screw Vite	Schraube Tornille	Vis	A	317-06266-0		2
18	Rotor-insert ass'y Insieme rotore	Rotor Conjunto rotor	Rotor et douille ass.	A	S24-10116-0	S24-30049-0	1
19	Pin-vane holdout Pistoncino di sostemtamento	Stössel Espiga empuje paleta	Poussoir de palette	A	034-59098-0	034-24982-0	10
20	Vane Paletta	Flügel Paleta	Palette	A	034-59099-0	034-66716-0	10
21	Dowel pin Spina	Zentrierstift Pasador	Goupille	AG	323-82010-0		1
22	Screw Vite	Schraube Tornille	Vis		306-40038-0		4
23	Bush Bussola	Buchse Cojinete de fricción	Bague	AG	034-71867-0		1

Parker Hannifin Manufacturing France SAS
VPDE, Denison Vane Pumps
Vierzon - France

Item Pos. Réf. Pos.	Description Descrizione	Benennung Descripcion	Description		Part N° Teil Nr. Code N° Referencia T6C	Part N° Teil Nr. Code N° Referencia T6CM	Qty Stück Qté Cant.
	REPAIR KIT KIT DI RICAMBIO	AUSTAUSCH-BAUGRUPPEN CONJUNTO REPARACION	POCHETTES RECHANGES				
A	Cart. and plate ass'y B03 C.W. Ins. cart. B03 oraria	Pumpeneinheit B03 Rechtslauf Conjunto cart. y platos B03 giro d.	Cart. et plaque ass. B03 rot. d.		S14-97604-*	S24-30097-*	1
A	Cart. and plate ass'y B03 C.C.W. Ins. cart. B03 antioraria	Pumpeneinheit B03 Linkslauf Conjunto cart. y platos B03 giro i.	Cart. et plaque ass. B03 rot. g.		S14-97605-*	S24-30098-*	1
A	Cart. and plate ass'y B05 C.W. Ins. cart. B05 oraria	Pumpeneinheit B05 Rechtslauf Conjunto cart. y platos B05 giro d.	Cart. et plaque ass. B05 rot. d.		S14-97606-*	S24-30099-*	1
A	Cart. and plate ass'y B05 C.C.W. Ins. cart. B05 antioraria	Pumpeneinheit B05 Linkslauf Conjunto cart. y platos B05 giro i.	Cart. et plaque ass. B05 rot. g.		S14-97607-*	S24-30100-*	1
A	Cart. and plate ass'y B06 C.W. Ins. cart. B06 oraria	Pumpeneinheit B06 Rechtslauf Conjunto cart. y platos B06 giro d.	Cart. et plaque ass. B06 rot. d.		S14-97608-*	S24-30101-*	1
A	Cart. and plate ass'y B06 C.C.W. Ins. cart. B06 antioraria	Pumpeneinheit B06 Linkslauf Conjunto cart. y platos B06 giro i.	Cart. et plaque ass. B06 rot. g.		S14-97609-*	S24-30102-*	1
A	Cart. and plate ass'y B08 C.W. Ins. cart. B08 oraria	Pumpeneinheit B08 Rechtslauf Conjunto cart. y platos B08 giro d.	Cart. et plaque ass. B08 rot. d.		S14-97610-*	S24-30103-*	1
A	Cart. and plate ass'y B08 C.C.W. Ins. cart. B08 antioraria	Pumpeneinheit B08 Linkslauf Conjunto cart. y platos B08 giro i.	Cart. et plaque ass. B08 rot. g.		S14-97611-*	S24-30104-*	1
A	Cart. and plate ass'y B10 C.W. Ins. cart. B10 oraria	Pumpeneinheit B10 Rechtslauf Conjunto cart. y platos B10 giro d.	Cart. et plaque ass. B10 rot. d.		S14-97612-*	S24-30105-*	1
A	Cart. and plate ass'y B10 C.C.W. Ins. cart. B10 antioraria	Pumpeneinheit B10 Linkslauf Conjunto cart. y platos B10 giro i.	Cart. et plaque ass. B10 rot. g.		S14-97613-*	S24-30106-*	1
A	Cart. and plate ass'y B12 C.W. Ins. cart. B12 oraria	Pumpeneinheit B12 Rechtslauf Conjunto cart. y platos B12 giro d.	Cart. et plaque ass. B12 rot. d.		S24-26494-*	S24-30107-*	1
A	Cart. and plate ass'y B12 C.C.W. Ins. cart. B12 antioraria	Pumpeneinheit B12 Linkslauf Conjunto cart. y platos B12 giro i.	Cart. et plaque ass. B12 rot. g.		S24-26495-*	S24-30108-*	1
A	Cart. and plate ass'y B14 C.W. Ins. cart. B14 oraria	Pumpeneinheit B14 Rechtslauf Conjunto cart. y platos B14 giro d.	Cart. et plaque ass. B14 rot. d.		S14-97614-*	S24-30109-*	1
A	Cart. and plate ass'y B14 C.C.W. Ins. cart. B14 antioraria	Pumpeneinheit B14 Linkslauf Conjunto cart. y platos B14 giro i.	Cart. et plaque ass. B14 rot. g.		S14-97615-*	S24-30110-*	1
A	Cart. and plate ass'y B17 C.W. Ins. cart. B17 oraria	Pumpeneinheit B17 Rechtslauf Conjunto cart. y platos B17 giro d.	Cart. et plaque ass. B17 rot. d.		S14-97616-*	S24-30111-*	1
A	Cart. and plate ass'y B17 C.C.W. Ins. cart. B17 antioraria	Pumpeneinheit B17 Linkslauf Conjunto cart. y platos B17 giro i.	Cart. et plaque ass. B17 rot. g.		S14-97617-*	S24-30112-*	1
A	Cart. and plate ass'y B20 C.W. Ins. cart. B20 oraria	Pumpeneinheit B20 Rechtslauf Conjunto cart. y platos B20 giro d.	Cart. et plaque ass. B20 rot. d.		S24-31767-*	S24-30113-*	1
A	Cart. and plate ass'y B20 C.C.W. Ins. cart. B20 antioraria	Pumpeneinheit B20 Linkslauf Conjunto cart. y platos B20 giro i.	Cart. et plaque ass. B20 rot. g.		S24-63300-*	S24-30114-*	1
A	Cart. and plate ass'y B22 C.W. Ins. cart. B22 oraria	Pumpeneinheit B22 Rechtslauf Conjunto cart. y platos B22 giro d.	Cart. et plaque ass. B22 rot. d.		S14-97618-*	S24-30115-*	1
A	Cart. and plate ass'y B22 C.C.W. Ins. cart. B22 antioraria	Pumpeneinheit B22 Linkslauf Conjunto cart. y platos B22 giro i.	Cart. et plaque ass. B22 rot. g.		S14-97619-*	S24-30116-*	1
A	Cart. and plate ass'y B25 C.W. Ins. cart. B25 oraria	Pumpeneinheit B25 Rechtslauf Conjunto cart. y platos B25 giro d.	Cart. et plaque ass. B25 rot. d.		S14-97620-*	S24-30117-*	1

Parker Hannifin Manufacturing France SAS
VPDE, Denison Vane Pumps
Vierzon - France

Item Pos. Réf. Pos.	Description Descrizione	Benennung Descripcion	Description		Part N° Teil Nr. Code N° Referencia T6C	Part N° Teil Nr. Code N° Referencia T6CM	Qty Stück Qté Cant.
A	Cart. and plate ass'y B25 C.C.W. Ins. cart. B25 antioraria	Pumpeneinheit B25 Linkslauf Conjunto cart. y platos B25 giro i.	Cart. et plaque ass. B25 rot. g.		S14-97621-*	S24-30118-*	1
A	Cart. and plate ass'y B28 C.W. Ins. cart. B28 oraria	Pumpeneinheit B28 Rechtslauf Conjunto cart. y platos B28 giro d.	Cart. et plaque ass. B28 rot. d.		S14-97622-*	S24-30119-*	1
A	Cart. and plate ass'y B28 C.C.W. Ins. cart. B28 antioraria	Pumpeneinheit B28 Linkslauf Conjunto cart. y platos B28 giro i.	Cart. et plaque ass. B28 rot. g.		S14-97623-*	S24-30120-*	1
A	Cart. and plate ass'y B31 C.W. Ins. cart. B31 oraria	Pumpeneinheit B31 Rechtslauf Conjunto cart. y platos B31 giro d.	Cart. et plaque ass. B31 rot. d.		S24-50671-*	S24-45791-*	1
A	Cart. and plate ass'y B31 C.C.W. Ins. cart. B31 antioraria	Pumpeneinheit B31 Linkslauf Conjunto cart. y platos B31 giro i.	Cart. et plaque ass. B31 rot. g.		S24-68068-*	S24-45792-*	1
B	Seal kit (S1 - 0,7 bar) Serie guarnizioni (S1 - 0,7 bar)	Dichtringsatz (S1 - 0,7 bar) Juego de juntas (S1 - 0,7 bar)	Pochette de joint (S1 - 0,7 bar)		S24-10133-0		1
	Seal kit (S4 - 7 bar) Serie guarnizioni (S4 - 7 bar)	Dichtringsatz (S4 - 7 bar) Juego de juntas (S4 - 7 bar)	Pochette de joint (S4 - 7 bar)		S24-10133-4		1
	Seal kit (S5 - 7 bar) Serie guarnizioni (S5 - 7 bar)	Dichtringsatz (S5 - 7 bar) Juego de juntas (S5 - 7 bar)	Pochette de joint (S5 - 7 bar)		S24-10133-5		1
C	Shaft and bearing ass'y (code 1) Ins. albero (codice 1)	Baugruppe (Welle u. Lager) (Typ 1) Conjunto eje cojinete (codigo 1)	Arbre et roulement ass. (code 1)		S14-24570-0		1
D	Shaft and bearing ass'y (code 2) Ins. albero (codice 2)	Baugruppe (Welle u. Lager) (Typ 2) Conjunto eje cojinete (codigo 2)	Arbre et roulement ass. (code 2)		S14-25645-0		1
E	Shaft and bearing ass'y (code 3) Ins. albero (codice 3)	Baugruppe (Welle u. Lager) (Typ 3) Conjunto eje cojinete (codigo 3)	Arbre et roulement ass. (code 3)		S14-24569-0		1
F	Shaft and bearing ass'y (code 4) Ins. albero (codice 4)	Baugruppe (Welle u. Lager) (Typ 4) Conjunto eje cojinete (codigo 4)	Arbre et roulement ass. (code 4)			S24-10430-0	1
G	Port plate-rear and bush ass'y Ins. piatto distributore post.	Steuerplatte mit Buchse Conj. plato dist. tras. con coj. fricción	Plaque ar. et bague ass.		S14-45605-0		1
	Seal class Tipo di guarnizioni	Dichtringsatz Clase de juntas	Classe de joint	S**-*****-*=			
				S1 BUNA N S**-*****-0			
				S4 EPDM S**-*****-4			
				S5 VITON® S**-*****-5			

Parker Hannifin Manufacturing France SAS
VPDE, Denison Vane Pumps
Vierzon - France

Model Code

Typenschlüssel

Designation - type

Model number : T6C. - B22 - 1 R 00 - B 1 - ..

Series — One letter can be added to specify special parts in series

Baureihe — Optionen

Série — Une lettre peut être ajoutée pour spécifier les pièces spéciales dans la série.

Cam ring (Volumetric displacement) (ml/rev.)
B03 = 10,8
B05 = 17,2
B06 = 21,3
B08 = 26,4
B10 = 34,1

Hubring (Geometrisches Fördervolumen) (cm^3/U)
B12 = 37,1
B14 = 46,0
B17 = 58,3
B20 = 63,8

Came (Cylindrée théorique) (cm^3/tr)
B22 = 70,3
B25 = 79,3
B28 = 88,8
B31 = 100,0

Type of shaft
1 = keyed (SAE B)
2 = keyed (no SAE)
3 = splined (SAE B)
4 = splined (SAE BB)

Art der Welle
1 = Paßfederwelle (SAE B)
2 = Paßfederwelle (no SAE)
3 = Vielkeilwelle (SAE B)
4 = Vielkeilwelle (SAE BB)

Type d'arbre
1 = à clavette (SAE B)
2 = à clavette (no SAE)
3 = à cannelures (SAE B)
4 = à cannelures (SAE BB)

Direction of rotation
R = Clockwise
L = Counter-clockwise

Drehrichtung
R = Rechtslauf
L = Linkslauf

Sens de rotation
R = à droite
L = à gauche

Porting combination
00 = standard

Lage der Anschlüsse
00 = standard

Combinaison des orifices
00 = standard

Design letter

Ausführungsbuchstabe

Conception

Seal class
1 = S1 - BUNA N
4 = S4 - EPDM
5 = S5 - VITON

Dichtungsklasse
1 = S1 - BUNA N
4 = S4 - EPDM
5 = S5 - VITON

Classe de joint
1 = S1 - BUNA N
4 = S4 - EPDM
5 = S5 - VITON

Modifications

Modifikationen

Modifications

Parker Hannifin Manufacturing France SAS
VPDE, Denison Vane Pumps
Vierzon - France

Designazione

Clave de designación

Sigla : T6C . - B22 - 1 R 00 - B 1 - ..

Referencia modelo :

Serie

Una lettera può essere aggiunta per specificare parti speciali nella serie

Tipo di cartuccia
(Cilindrata) (ml/giro)
B03 = 10,8
B05 = 17,2
B06 = 21,3
B08 = 26,4
B10 = 34,1
B12 = 37,1
B14 = 46,0

Tipo di albero
1 = a chiavetta (SAE B)
2 = a chiavetta (no SAE)
3 = scanalato (SAE B)
4 = scanalato (SAE BB)

Senso di rotazione
R = Orario
L = Antiorario

Orientamento delle bocche
00 = standard

Disegno

Tipo di guarnizioni
1 = S1 - BUNA N
4 = S4 - EPDM
5 = S5 - VITON

Modifiche

Serie

Una letra puede ser añadide pasa especificar piezas especiales en la serie

Aro volumetrico
(Cilindrada) (ml/rev)
B17 = 58,3
B20 = 63,8
B22 = 70,3
B25 = 79,3
B28 = 88,8
B31 = 100,0

Tipo de eje
1 = chaveteado (SAE B)
2 = chaveteado (no SAE)
3 = estriado (SAE B)
4 = estriado (SAE BB)

Sentido de giro
R = Derecha
L = Izquierda

Posición de bocas
00 = estándar

Letra de diseño

Clase de juntas
1 = S1 - BUNA N
4 = S4 - EPDM
5 = S5 - VITON

Modificaciones

Parker Hannifin Manufacturing France SAS
VPDE, Denison Vane Pumps
Vierzon - France

Model Code

Typenschlüssel

Designation - type

Model number :	**Typenbezeichnung :**	**Numéro du modèle :**	T6CM	.	-	B22	-	1	R	00	-	C	1	-	..

Series M = Mobile 1 shaft seal
Serie M = Mobil, 1 Wellendichtung
Série M = Mobile 1 joint d'arbre

One letter can be added to specify special parts in series
Optionen
Une lettre peut être ajoutée pour spécifier les pièces spéciales dans la série.

Cam ring
(Volumetric displacement) (ml/rev.)
B03 = 10,8
B05 = 17,2
B06 = 21,3
B08 = 26,4
B10 = 34,1

Hubring
(Geometrisches Fördervolumen) (cm^3/U)
B12 = 37,1
B14 = 46,0
B17 = 58,3
B20 = 63,8

Came
(Cylindrée théorique) (cm^3/tr)
B22 = 70,3
B25 = 79,3
B28 = 88,8
B31 = 100,0

Type of shaft
1 = keyed (SAE B)
2 = keyed (no SAE)
3 = splined (SAE B)
4 = splined (SAE BB)

Art der Welle
1 = Paßfederwelle (SAE B)
2 = Paßfederwelle (no SAE)
3 = Vielkeilwelle (SAE B)
4 = Vielkeilwelle (SAE BB)

Type d'arbre
1 = à clavette (SAE B)
2 = à clavette (no SAE)
3 = à cannelures (SAE B)
4 = à cannelures (SAE BB)

Direction of rotation
R = Clockwise
L = Counter-clockwise

Drehrichtung
R = Rechtslauf
L = Linkslauf

Sens de rotation
R = à droite
L = à gauche

Porting combination
00 = standard

Lage der Anschlüsse
00 = standard

Combinaison des orifices
00 = standard

Design letter

Ausführungsbuchstabe

Conception

Seal class
1 = S1 - BUNA N
4 = S4 - EPDM
5 = S5 - VITON

Dichtungsklasse
1 = S1 - BUNA N
4 = S4 - EPDM
5 = S5 - VITON

Classe de joint
1 = S1 - BUNA N
4 = S4 - EPDM
5 = S5 - VITON

Modifications

Modifikationen

Modifications

Parker Hannifin Manufacturing France SAS
VPDE, Denison Vane Pumps
Vierzon - France

Designazione

Clave de designación

Sigla : T6CM . - B22 - 1 R 00 - C 1 - ..

Referencia modelo :

Serie M = Mobile 1 guarnizione albero — **Serie M = Movil 1 reten eje**

Una lettera può essere aggiunta per specificare parti speciali nella serie — Una letra puede ser añadide pasa especificar piezas especiales en la serie

Tipo di cartuccia (Cilindrata) (ml/giro)
B03 = 10,8
B05 = 17,2
B06 = 21,3
B08 = 26,4
B10 = 34,1
B12 = 37,1
B14 = 46,0

Aro volumetrico (Cilindrada) (ml/rev)
B17 = 58,3
B20 = 63,8
B22 = 70,3
B25 = 79,3
B28 = 88,8
B31 = 100,0

Tipo di albero
1 = a chiavetta (SAE B)
2 = a chiavetta (no SAE)
3 = scanalato (SAE B)
4 = scanalato (SAE BB)

Tipo de eje
1 = chaveteado (SAE B)
2 = chaveteado (no SAE)
3 = estriado (SAE B)
4 = estriado (SAE BB)

Senso di rotazione
R = Orario
L = Antiorario

Sentido de giro
R = Derecha
L = Izquierda

Orientamento delle bocche
00 = standard

Posición de bocas
00 = estándar

Disegno

Letra de diseño

Tipo di guarnizioni
1 = S1 - BUNA N
4 = S4 - EPDM
5 = S5 - VITON

Clase de juntas
1 = S1 - BUNA N
4 = S4 - EPDM
5 = S5 - VITON

Modifiche

Modificaciones

Parker Hannifin Manufacturing France SAS
VPDE, Denison Vane Pumps
Vierzon - France

WARNING — USER RESPONSIBILITY

FAILURE OR IMPROPER SELECTION OR IMPROPER USE OF THE PRODUCTS DESCRIBED HEREIN OR RELATED ITEMS CAN CAUSE DEATH, PERSONAL INJURY AND PROPERTY DAMAGE.

- This document and other information from Parker-Hannifin Corporation, its subsidiaries and authorized distributors provide product or system options for further investigation by users having technical expertise.

- The user, through its own analysis and testing, is solely responsible for making the final selection of the system and components and assuring that all performance, endurance, maintenance, safety and warning requirements of the application are met. The user must analyze all aspects of the application, follow applicable industry standards, and follow the information concerning the product in the current product catalog and in any other materials provided from Parker or its subsidiaries or authorized distributors.

- To the extent that Parker or its subsidiaries or authorized distributors provide component or system options based upon data or specifications provided by the user, the user is responsible for determining that such data and specifications are suitable and sufficient for all applications and reasonably foreseeable uses of the components or systems.

Offer of Sale

Please contact your Parker representation for a detailed ”Offer of Sale”.

Parker Hannifin Manufacturing France SAS
VPDE, Denison Vane Pumps
Vierzon - France

Parker Worldwide

Europe, Middle East, Africa

AE – United Arab Emirates,
Dubai
Tel: +971 4 8127100
parker.me@parker.com

AT – Austria, Wiener Neustadt
Tel: +43 (0)2622 23501-0
parker.austria@parker.com

AT – Eastern Europe, Wiener Neustadt
Tel: +43 (0)2622 23501 900
parker.easteurope@parker.com

AZ – Azerbaijan, Baku
Tel: +994 50 22 33 458
parker.azerbaijan@parker.com

BE/LU – Belgium, Nivelles
Tel: +32 (0)67 280 900
parker.belgium@parker.com

BG – Bulgaria, Sofia
Tel: +359 2 980 1344
parker.bulgaria@parker.com

BY – Belarus, Minsk
Tel: +48 (0)22 573 24 00
parker.poland@parker.com

CH – Switzerland, Etoy
Tel: +41 (0)21 821 87 00
parker.switzerland@parker.com

CZ – Czech Republic, Klecany
Tel: +420 284 083 111
parker.czechrepublic@parker.com

DE – Germany, Kaarst
Tel: +49 (0)2131 4016 0
parker.germany@parker.com

DK – Denmark, Ballerup
Tel: +45 43 56 04 00
parker.denmark@parker.com

ES – Spain, Madrid
Tel: +34 902 330 001
parker.spain@parker.com

FI – Finland, Vantaa
Tel: +358 (0)20 753 2500
parker.finland@parker.com

FR – France, Contamine s/Arve
Tel: +33 (0)4 50 25 80 25
parker.france@parker.com

GR – Greece, Athens
Tel: +30 210 933 6450
parker.greece@parker.com

HU – Hungary, Budaoers
Tel: +36 23 885 470
parker.hungary@parker.com

IE – Ireland, Dublin
Tel: +353 (0)1 466 6370
parker.ireland@parker.com

IT – Italy, Corsico (MI)
Tel: +39 02 45 19 21
parker.italy@parker.com

KZ – Kazakhstan, Almaty
Tel: +7 7273 561 000
parker.easteurope@parker.com

NL – The Netherlands, Oldenzaal
Tel: +31 (0)541 585 000
parker.nl@parker.com

NO – Norway, Asker
Tel: +47 66 75 34 00
parker.norway@parker.com

PL – Poland, Warsaw
Tel: +48 (0)22 573 24 00
parker.poland@parker.com

PT – Portugal
Tel: +351 22 999 7360
parker.portugal@parker.com

RO – Romania, Bucharest
Tel: +40 21 252 1382
parker.romania@parker.com

RU – Russia, Moscow
Tel: +7 495 645-2156
parker.russia@parker.com

SE – Sweden, Spånga
Tel: +46 (0)8 59 79 50 00
parker.sweden@parker.com

SK – Slovakia, Banská Bystrica
Tel: +421 484 162 252
parker.slovakia@parker.com

SL – Slovenia, Novo Mesto
Tel: +386 7 337 6650
parker.slovenia@parker.com

TR – Turkey, Istanbul
Tel: +90 216 4997081
parker.turkey@parker.com

UA – Ukraine, Kiev
Tel: +48 (0)22 573 24 00
parker.poland@parker.com

UK – United Kingdom, Warwick
Tel: +44 (0)1926 317 878
parker.uk@parker.com

ZA – South Africa, Kempton Park
Tel: +27 (0)11 961 0700
parker.southafrica@parker.com

North America

CA – Canada, Milton, Ontario
Tel: +1 905 693 3000

US – USA, Cleveland (industrial)
Tel: +1 216 896 3000

US – USA, Elk Grove Village (mobile)
Tel: +1 847 258 6200

Asia Pacific

AU – Australia, Castle Hill
Tel: +61 (0)2-9634 7777

CN – China, Shanghai
Tel: +86 21 2899 5000

HK – Hong Kong
Tel: +852 2428 8008

ID – Indonesia, Tangerang
Tel: +62 21 7588 1906

IN – India, Mumbai
Tel: +91 22 6513 7081-85

JP – Japan, Fujisawa
Tel: +81 (0)4 6635 3050

KR – South Korea, Seoul
Tel: +82 2 559 0400

MY – Malaysia, Shah Alam
Tel: +60 3 7849 0800

NZ – New Zealand, Mt Wellington
Tel: +64 9 574 1744

SG – Singapore
Tel: +65 6887 6300

TH – Thailand, Bangkok
Tel: +662 186 7000

TW – Taiwan, New Taipei City
Tel: +886 2 2298 8987

VN – Vietnam, Ho Chi Minh City
Tel: +84 8 3999 1600

South America

AR – Argentina, Buenos Aires
Tel: +54 3327 44 4129

BR – Brazil, Cachoeirinha RS
Tel: +55 51 3470 9144

CL – Chile, Santiago
Tel: +56 2 623 1216

MX – Mexico, Toluca
Tel: +52 72 2275 4200

Ed. 2016-04-04

© 2017 Parker Hannifin Corporation. All rights reserved.

Catalogue HY29-0046-M1/EU, 04/2017

EMEA Product Information Centre
Free phone: 00 800 27 27 5374
(from AT, BE, CH, CZ, DE, DK, EE, ES, FI, FR, IE, IL, IS, IT, LU, MT, NL, NO, PL, PT, RU, SE, SK, UK, ZA)

US Product Information Centre
Toll-free number: 1-800-27 27 537

www.parker.com

Your local authorized Parker distributor