Product Line Overview

H1 Axial Piston Pumps
Single and Tandem



Revision history

Table of revisions

Date	Changed	Rev
November 2024	Added H1P180	1101
February 2022	Added HDC controls and updated control availability for all frames	1001
January 2021	Changed document number from 'AM00000001' and 'L1012919' to 'AM152886484212' and added 280cc information	0904
April 2017	Converted to DITA CMS.	0802
May 2002	First edition	AA

Contents

Technical specifications

Overview of H1 Pumps Technical Specifications....4
Control Options....4
H1 Pumps Literature Reference....5

Dimensions

Frame size 045/053 (Single)....6
Frame size 045/053 (Tandem)....6
Frame size 060-280 (Single)....7
H1 pumps dimensions....7

Technical specifications

Overview of H1 Pumps Technical Specifications

The table shows the available range of H1 pumps as of this printing, with their respective speed, pressure, weight and mounting flange.

Feature	045	053	060	068	069	078	089	100	115	130	147	165	180	210	250	280
Displacement cm^3 [in^3]	45.0 [2.75]	53.8 [3.28]	60.4 [3.69]	68.0 [4.15]	69.2 [4.22]	78.1 [4.77]	89.2 [5.44]	101.7 [6.21]	115.2 [7.03]	130.0 [7.93]	147.2 [8.98]	165.1 [10.08]	180.2 [11]	211.5 [12.91]	251.7 [15.36]	280.2 [17]
Rated speed, min^{-1} (rpm)	3400	3400	3500	3500	3500	3500	3300	3300	3200	3200	3000	3000	3000	2600	2600	2600
Max. speed, min^{-1} (rpm)	3500	3500	4000	4000	4000	4000	3800	3800	3400	3400	3100	3100	3100	2800	2800	2800
Max. working pressure, bar [psi][1)]	420 [6092]	380 [5511]	420 [6092]	380 [5511]	450 [6527]	450 [6527]	450 [6527]	450 [6527]	450 [6527]	450 [6527]	450 [6527]	450 [6527]	420 [6092]	450 [6527]	450 [6527]	420 [6092]
Max pressure, bar [psi]	450 [6527]	400 [5802]	450 [6527]	400 [5802]	480 [6962]	480 [6962]	480 [6962]	480 [6962]	480 [6962]	480 [6962]	480 [6962]	480 [6962]	450 [6527]	480 [6962]	480 [6962]	450 [6527]
Weight dry, kg [lb] (without PTO/ filter)	single: 41 [90] tandem: 65 [143]		single: 50 [110] tandem: 96.2 [212]		56 [123]	56 [123]	62 [137]	62 [137]	83 [187]	83 [187]	96 [211]	96 [211]	96 [211]	163 [360]	163 [360]	163 [360]
Mounting flange	SAE B, 2-bolt		SAE C, 4-bolt						SAE D, 4-bolt					SAE E, 4-bolt		

[1)] Applied pressures above maximum working pressure requires Danfoss application approval.

Control Options

Control availability

Control type	045/053 tandem	045/053 single	060/068	069/078	089/100	115/130	147/165/180	210/250/280
EDC	●	●	●	●	●	●	●	●
MDC	●	●	●	●	●	●	●	●
HDC	●	●	●	●	●	●	●	●
FNR	●	●	●	●	●	●	●	●
NFPE	●	●	●	●	●	●	●	●
FDC	●	●	●	●	●	●	●	●
AC	●	●	●	●	●	●	●	●

Technical specifications

H1 Pumps Literature Reference

Available literature for H1 Pumps

Title	Literature Type	Number
H1 Axial Piston Pumps, Single and Tandem	Product Line Overview	AM152886484212
H1 Axial Piston Pumps, Single and Tandem	Basic Information	BC152886483968
H1T 045/053/060/068 Axial Piston Tandem Pumps	Technical Information	BC152886483958
H1P 045/053 Axial Piston Single Pumps	Technical Information	BC152886483105
H1P 060/068 Axial Piston Single Pumps	Technical Information	BC152886483241
H1P 069/078 Axial Piston Single Pumps	Technical Information	BC152886483133
H1P 089/100 Axial Piston Single Pumps	Technical Information	BC152886482765
H1P 115/130 Axial Piston Single Pumps	Technical Information	BC152886483053
H1P 147/165/180 Axial Piston Single Pumps	Technical Information	BC152886482989
H1P 210/25/280 Axial Piston Single Pumps	Technical Information	BC152986484463
H1P 045/053/060/068 Axial Piston Single Pumps	Service Manual	AX152886481964
H1T 045/053/060/068 Axial Piston Tandem Pumps	Service Manual	AX152886481761
H1P 069–280 Axial Piston Single Pumps	Service Manual	AX152886482551

Data sheets for all pump sizes are available.

Further available literature

Title	Literature Type	Number
H1 Pump Electrical Displacement Control (EDC)	Electrical Installation	BC152886483648
H1 Pump 3-position Electric Control (FNR)	Electrical Installation	BC152886483708
H1 Pump Non-Feedback Prop. Electric Control (NFPE)	Electrical Installation	BC152886483538
H1 Pump Automotive Control (AC)	Technical Information	BC152986482596
H1 Automotive on PLUS+1 for MC024	Technical Information	BC152986484456
Speed and Temperature Sensor	Technical Information	BC152886482203
Pressure Sensor	Technical Information	BC152886484429
External Remote Charge Pressure Filter	Technical Information	BC152886484487
Design Guideline for Hydraulic Fluid Cleanliness	Technical Information	BC152886482150
Hydraulic Fluids and Lubricants	Technical Information	BC152886484524

Dimensions

Frame size 045/053 (Single)

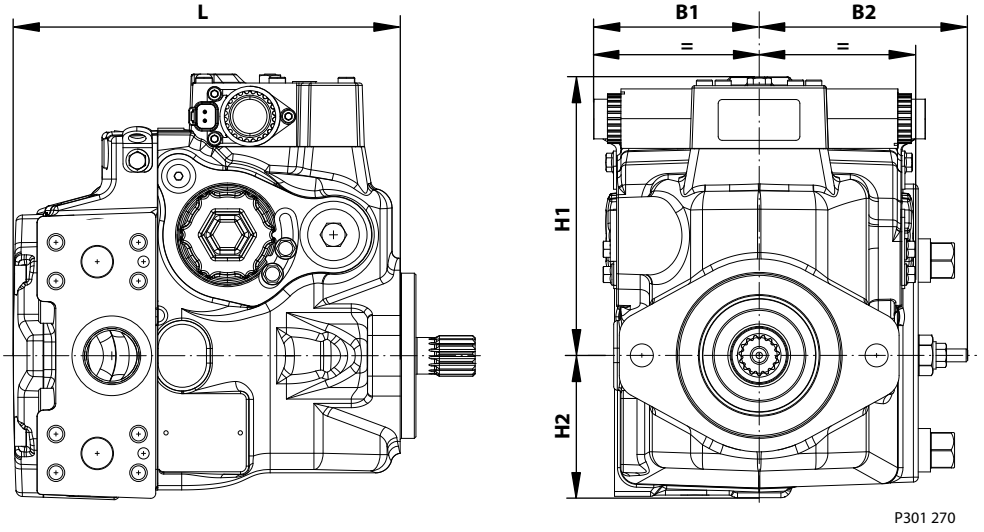

Frame size 045/053 (Tandem)

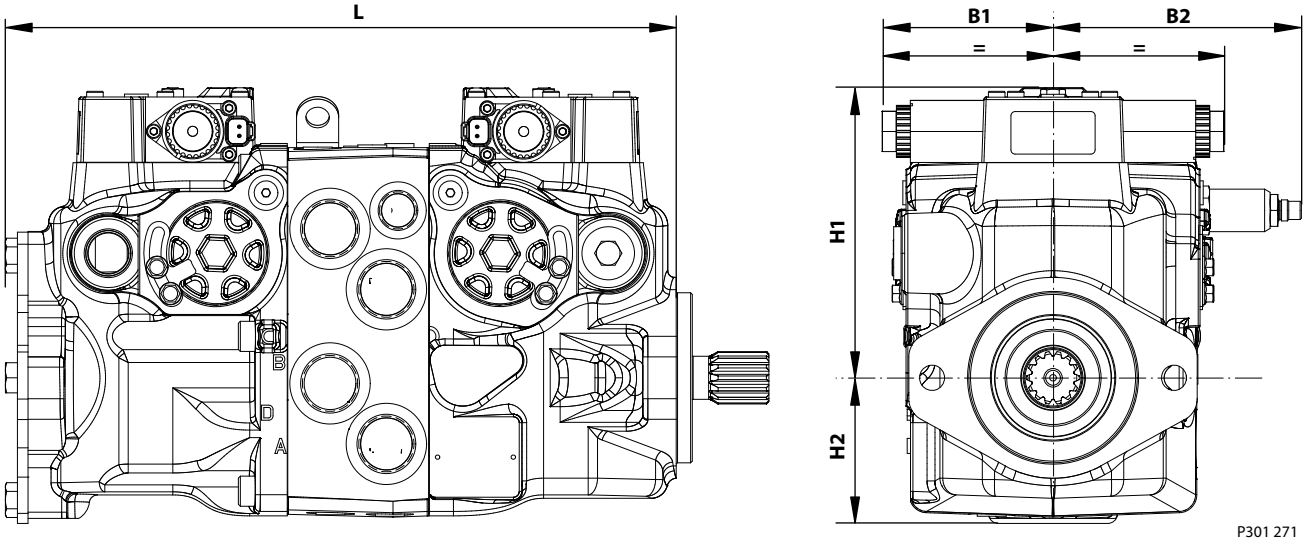

Dimensions

Frame size 060-280 (Single)

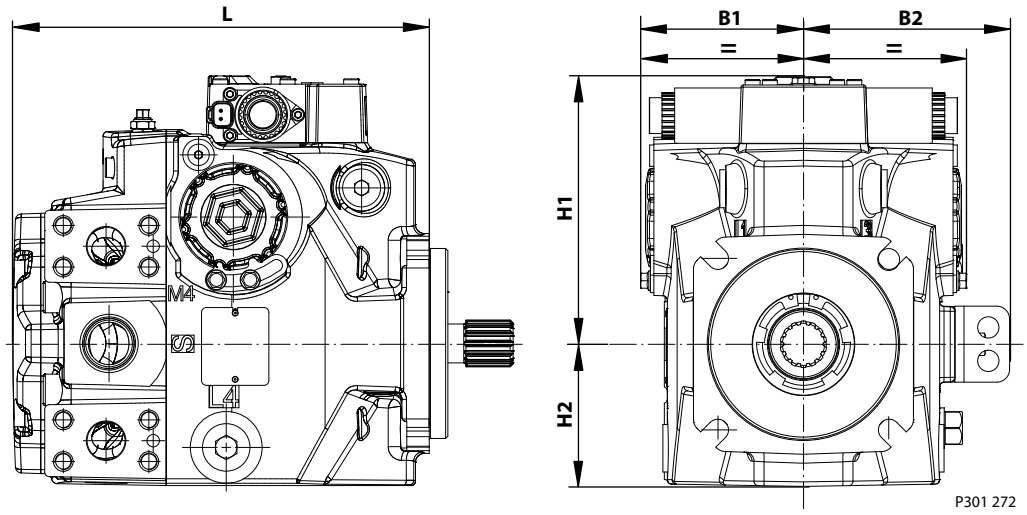

H1 pumps dimensions

Dimensions (mm)

Size	L	B1	B2	H1	H2
045/053 Single	238.2	103.0	129.7	173.3	88.5
045/053 Tandem	405.0	103.0	129.7	173.3	87.0
060/068	255.9	106.0	135.5	173.9	99.4
069/078	278.3	108.9	138.2	178.9	95.0
089/100	295.3	112.4	139.2	187.3	99.0
115/130	316.9	121.9	148.1	204.3	110.0
147/165/180	333.3	131.9	152.6	208.3	112.0
210/250/280	418.9	155.0	172.2	245.0	136.0